PHILIPS

Data handbook

PHILIPS

Electronic
components
and materials

Semiconductors

Book S10 1987

Wideband transistors and
Wideband hybrid IC modules

WIDEBAND TRANSISTORS AND WIDEBAND HYBRID IC MODULES

page

Selection guide

Type number survey (alphanumerical) with main characteristics

General

Device data in alphanumerical sequence

SELECTION GUIDE

This table shows the most preferred types of n-p-n transistors and their complements for wideband applications. It shows the types *in sequence of linear output voltage* capability in each type of envelope. The values of V_O, ITO and PL1 are only given as a typical reference.

For detailed information see relevant data sheet.

Wideband transistors (f_T = 5 GHz)

			I_C (mA) V_{CE} (V)		14 10	30 8	70 10	80 10	90 10	120 15	240 15	600 18
	polarity		V_o* (mV)		150	425	700		1000	1200	1600	2500
			ITO (dBm)		27	36	40		43	45	47	52
envelope	n-p-n	p-n-p	PL1 (dBm)		8	17	21		24	26	28	33
SOT-37	●			BFT24	BFR90A	BFR91A	BFR96S		BFQ34T			
		●			BFQ51	BFQ23	BFQ32S					
SOT-23	●			BFT25	BFR92A	BFR93A						
		●			BFT92	BFT93						
SOT-89	●						BFQ19	BFQ18A				
SOT-122	●									BFQ34	BFQ68	BFQ136
SOT-103	●				BFG90A	BFG91A	BFG96		BFG34			
		●			BFG51	BFG23	BFG32					
SOT-143	●				BFG92A	BFG93A						
SOT-173	●				BFP90A	BFP91A	BFP96					
		●			BFQ51C	BFQ23C	BFQ32C					
TO-72	●				BFQ53	BFQ22S	BFQ63					
		●			BFQ52	BFQ24	BFQ32M					

* Typical output voltage at d_{im} = −60 dB (DIN45004B, par. 6.3: 3-tone).

Wideband transistors (f_T = 7,5 GHz)

			I_C (mA) V_{CE} (V)		15 8	50 8			
SOT-37	●				BFQ65				
SOT-23	●				BFQ67				
SOT-103	●				BFG65	BFG195			
SOT-143	●				BFG67				
SOT-173	●				BFQ66				

type number	frequency range MHz	power gain (dB) at f = 50 MHz	application	page
BGY61 BGY65 BGY67 BGY67A	5 - 200	13,0 ± 0,5 18,5 ± 0,5 22,0 ± 0,5 24,0 ± 0,5	reverse amplifiers	631 635 639 643
BGY50 BGY51	40 - 300	12,5 ± 0,4	preamplifier post amplifier	599 599
BGY52 BGY53	40 - 300	16,4 ± 0,4	preamplifier post amplifier	603 603
BGY54 BGY55	40 - 300	17,0 ± 0,4	preamplifier post amplifier	607 607
BGY56 BGY57	40 - 300	22,0 ± 0,6	preamplifier post amplifier	611 611
BGY58	40 - 300	33,0 ± 1,0	line extender	615
BGY58A	40 - 330	34,0 ± 1,0	line extender	619
BGY59	40 - 300	38,5 ± 1,0	line extender	623
BGY60	40 - 300	33,5 ± 1,0	interstage amplifier (2 x 17 dB)	627
BGD102 BGD104	40 - 450	18,5 ± 0,5 20,0 ± 0,5	power doubler amplifiers	583 583
BGD102E BGD104E	40 - 450	18,5 ± 0,5 20,0 ± 0,5	power doubler amplifiers	587 587
BGY70 BGY71	40 - 450	12,5 ± 0,4	preamplifier post amplifier	647 647
BGY74 BGY75	40 - 450	17,0 ± 0,4	preamplifier post amplifier	651 651
BGY78	40 - 450	34,0 ± 1,0	line extender	655
BGY84 BGY85	40 - 450	17,0 ± 0,5	preamplifier post amplifier	659 659
BGY84A BGY85A	40 - 450	18,4 ± 0,4	preamplifier post amplifier	663 663
BGY86 BGY87	40 - 450	22,0 ± 0,5	preamplifier post amplifier	667 667
BGY88	40 - 450	34,5 ± 1,0	line extender	671
BGY584A BGY585A	40 - 550	18,2 ± 0,5	preamplifier post amplifier	675 675
BGY586 BGY587	40 - 550	22,0 ± 0,5	preamplifier post amplifier	679 679
BGD502 BGD504	40 - 550	18,5 ± 0,5 20,0 ± 0,5	power doubler power doubler	591 591
BGX885	40 - 860	17,0 ± 0,5	40 - 860 MHz amplifier	595

All modules normally operate at V_B = 24 V, but are able to withstand supply transients up to 30 V.

12 V supply voltage

	type	stages	gain (dB)	$V_{o(rms)}$ (dBμV) −60 dB IMD (note 1) min. values	noise figure (dB)	max. VSWR typ. values (note 2)		supply current (mA)	page
						input	output		
low	OM345	1	12	97	5,5	2,0	1,4	11,5	733
medium	OM350	2	18	98	6,0	1,5	1,9	18	739
medium	OM360	3	23	105	7,0	1,3	1,5	55	745
output	OM361	3	28	105	6,0	1,5	1,7	50	751
high output	OM370	3	28	111	7,0	2,3	1,9	105	757

24 V supply voltage

	type	stages	gain (dB)	$V_{o(rms)}$ (dBμV) −60 dB IMD (note 1) min. values	noise figure (dB)	max. VSWR typ. values (note 2)		supply current (mA)	page
						input	output		
low output	OM320	2	15,5	92	5,5	2,2	2,5	33	687
	OM321	2	15,5	98	6,0	2,5	2,0	33	693
	OM335	3	27	98	5,5	1,9	3,2	35	711
medium output	OM322	2	15	103	7,0	1,7	1,7	60	699
	OM336	3	22	105	7,0	1,4	1,6	65	717
	OM339	3	28	105	6,0	1,5	1,5	66	729
high	OM323*	2	15	112	9,0	1,9	2,3	100	705
output	OM337*	3	26	113	9,8	2,3	1,8	115	721

* Also available in A-version for external coil and output capacitor.

Notes

1. Measured at −60 dB intermodulation distortion to DIN45004, par. 6.3: 3-tone, f = 470 MHz.
2. The typical maximum VSWR occurring in the frequency range 40-860 MHz, for a sample connected to a 75 Ω line.

TYPE NUMBER SURVEY

(alphanumeric)

RATINGS

CHARACTERISTICS (typical values unless otherwise specified)

type number	n-p-n or p-n-p	envelope	V_{CEO} V	I_C mA	P_{tot} mW	f_T GHz	F dB	at f MHz	G_{UM} dB	at f MHz	V_o* mV	PL1** dBm	IT0** dBm	I_C mA	V_{CE} V	page
BF689K	n	TO-92	15	25	360	1,8	3,0	200	16	200	–	–	–	–	–	59
BF763	n	TO-92	15	25	500	1,8	5,0	800	–	–	–	–	–	–	–	61
BFG23	p	SOT-103	12	35	180	5,0	3,7	800	14,5	800	400	16	35	30	8	63
BFG32	p	SOT-103	15	75	700	4,5	4,3	800	13,5	800	500	18	37	70	10	69
BFG34	n	SOT-103	18	150	1000	3,7	2,3	800	14,5	800	750	22	41	90	10	75
BFG51	p	SOT-103	15	25	180	5,0	3,4	800	16,5	800	150	7	26	14	10	81
BFG65	n	SOT-103	10	50	300	7,5	3,0	2000	10,5	2000	–	–	–	–	–	89
BFG67	n	SOT-143	10	50	300	7,5	3,0	2000	10	2000	–	–	–	–	–	97
BFG90A	n	SOT-103	15	25	180	5,0	2,4	800	19	800	150	8	27	14	10	101
BFG91A	n	SOT-103	12	35	300	6,0	2,3	800	17,5	800	425	17	36	30	8	111
BFG92A	n	SOT-143	15	25	300	5,0	1,8	800	9,5	2000	–	–	–	–	–	121
BFG93A	n	SOT-143	12	35	300	6,0	1,6	800	9	2000	–	–	–	–	–	125
BFG96	n	SOT-103	15	150	700	5,0	3,7	800	15	800	700	21	40	70	10	129
BFG195	n	SOT-103	10	100	500	7,5	1,9	800	11	2000	–	–	–	–	–	139
BFP90A	n	SOT-173	15	30	250	5,0	2,4	800	19,5	800	150	8	27	14	10	141
BFP91A	n	SOT-173	12	50	350	6,0	2,3	800	18,5	800	425	17	36	30	8	151
BFP96	n	SOT-173	15	100	500	5,0	2,5	800	15	800	700	21	40	70	10	157
BFQ17	n	SOT-89	25	150	1000	1,2	–	–	6,5	800	–	–	–	–	–	163
BFQ18A	n	SOT-89	15	150	1000	3,6	–	–	–	–	700	21	40	80	10	167
BFQ19	n	SOT-89	15	75	500	5,0	–	–	7,5	800	500	18	37	50	10	171

* Typical reference value at $d_{im} = -60$ dB.

** Typical reference values.

RATINGS **CHARACTERISTICS** (typical values unless otherwise specified)

type number	n-p-n or p-n-p	envelope	V_{CEO} V	I_C mA	P_{tot} mW	f_T GHz	F dB	at f MHz	G_{UM} dB	at f MHz	V_o* mV	PL1** dBm	IT0** dBm	I_C mA	V_{CE} V	page
BFQ22S	n	TO-72	12	35	150	5,0	1,9	500	16	500	300	14	33	30	5	175
BFQ23	p	SOT-37	12	35	180	5,0	2,4	500	16,5	500	300	14	33	30	5	179
BFQ23C	p	SOT-173	12	50	350	5,0	3,7	800	15	800	400	16	35	30	8	187
BFQ24	p	TO-72	12	35	150	5,0	2,4	500	15	500	300	14	33	30	5	195
BFQ32	p	SOT-37	15	75	500	4,2	3,8	500	14	500	500	18	37	50	10	199
BFQ32C	p	SOT-173	15	100	500	4,5	4,3	800	13	800	500	19	38	70	10	203
BFQ32M	p	TO-72	15	75	250	4,5	2,3	500	11	500	–	–	–	–	–	211
BFQ32S	p	SOT-37	15	100	700	4,5	4,3	800	10	800	600	20	39	70	10	213
BFQ33	n	SOT-100	7	20	140	12,0	2,5	2000	13	2000	–	–	–	14	5	221
BFQ33C	n	SOT-173	7	20	140	12,0	3,0	2000	13,3	2000	–	–	–	–	–	227
BFQ34	n	SOT-122	18	150	2250	3,9	8,0	500	16,3	500	1200	26	45	120	15	233
BFQ34T	n	SOT-37	18	150	1000	3,7	–	–	19,5	300	1000	24	43	100	10	243
BFQ51	p	SOT-37	15	25	180	5,0	2,4	800	18	500	150	7	26	14	10	253
BFQ51C	p	SOT-173	15	30	250	5,0	2,5	800	16,5	800	150	8	27	14	10	261
BFQ52	p	TO-72	15	25	150	5,0	2,7	500	17	500	150	7	26	14	10	269
BFQ53	n	TO-72	15	25	150	5,0	2,4	500	18	500	150	7	26	14	10	273
BFQ63	n	TO-72	15	75	250	4,5	2,3	500	11,5	500	500	18	37	50	10	277
BFQ65	n	SOT-37	10	50	300	7,5	3,0	2000	8	2000	–	–	–	–	–	281
BFQ66	n	SOT-173	10	50	350	7,5	3,0	2000	11,5	2000	–	–	–	–	–	285
BFQ67	n	SOT-23	10	50	180	7,5	3,0	2000	8	2000	–	–	–	–	–	291

* Typical reference value at $d_{im} = -60$ dB.

** Typical reference values.

RATINGS | **CHARACTERISTICS** (typical values unless otherwise specified)

type number	n-p-n or p-n-p	envelope	V_{CEO} V	I_C mA	P_{tot} mW	f_T GHz	F dB	at f MHz	G_{UM} dB	at f MHz	V_o* mV	PL1** dBm	IT0** dBm	I_C mA	V_{CE} V	page
BFQ68	n	SOT-122	18	300	4500	4,0	–	–	13	800	1600	28	47	240	15	295
BFQ136	n	SOT-122	18	600	9000	4,0	–	–	12,5	800	2500	33	52	500	15	305
BFR49	n	SOT-100	15	25	180	5,0	2,5	1000	17	1000	–	–	–	–	–	313
BFR53	n	SOT-23	10	50	250	2,0	5,0	500	10,5	800	100	5	24	30	5	319
BFR64	n	SOT-48	25	200	3500	1,0	6,0	200	–	–	–	–	–	–	–	329
BFR65	n	SOT-48	25	400	5000	>1,0	–	–	–	–	–	–	–	–	–	337
BFR90	n	SOT-37	15	25	180	5,0	2,4	500	19,5	500	150	7	26	14	10	345
BFR90A	n	SOT-37	15	25	180	5,0	2,4	800	15	800	150	8	27	14	10	353
BFR91	n	SOT-37	12	35	180	5,0	1,9	500	18	500	300	14	33	30	5	367
BFR91A	n	SOT-37	12	35	300	6,0	2,3	800	14	800	425	17	36	30	8	375
BFR92	n	SOT-23	15	25	200	5,0	2,4	500	18	500	150	7	26	14	10	387
BFR92A	n	SOT-23	15	25	200	5,0	2,4	800	15	800	150	8	27	14	10	397
BFR93	n	SOT-23	12	35	200	5,0	1,9	500	16,5	500	300	14	33	30	5	409
BFR93A	n	SOT-23	12	35	250	5,0	2,3	800	14	800	425	16	35	30	8	419
BFR94	n	SOT-48	25	150	3500	3,5	5,0	500	13,5	500	700	21	40	90	20	431
BFR95	n	TO-39	25	150	1500	3,5	9,0	200	–	–	1000	24	43	80	18	441
BFR96	n	SOT-37	15	75	500	5,0	3,3	500	15,2	500	500	18	37	50	10	445
BFR96S	n	SOT-37	15	100	700	5,0	4,0	800	11,5	800	700	21	40	70	10	453
BFS17	n	SOT-23	15	25	250	1,3	4,5	500	–	–	–	–	–	–	–	465
BFS17A	n	SOT-23	15	25	300	2,8	2,5	800	13,5	800	150	7	26	14	10	471

---

* Typical reference value at d_{im} = –60 dB.

** Typical reference values.

RATINGS **CHARACTERISTICS** (typical values unless otherwise specified)

type number	n-p-n or p-n-p	envelope	V_{CEO} V	I_C mA	P_{tot} mW	f_T GHz	F dB	at f MHz	G_{UM} dB	at f MHz	V_o* mV	PL1** dBm	IT0** dBm	I_C mA	V_{CE} V	page
BFT24	n	SOT-37	5	2,5	30	2,3	3,8	500	17	500	—	—	—	—	—	477
BFT25	n	SOT-23	5	6,5	50	2,3	3,8	500	18	500	—	—	—	—	—	485
BFT92	p	SOT-23	15	25	200	5,0	2,7	500	18	500	150	7	26	14	10	493
BFT93	p	SOT-23	12	35	200	5,0	2,4	500	16,5	500	300	14	33	30	5	499
BFW16A	n	TO-39	25	150	1500	1,2	<6,0	200	—	—	—	—	—	—	—	505
BFW17A	n	TO-39	25	150	1500	1,1	—	—	—	—	—	—	—	—	—	515
BFW30	n	TO-72	10	50	250	1,6	<5,0	500	—	—	100	5	24	30	6	523
BFW92	n	SOT-37	15	25	190	1,6	4,0	500	—	—	—	—	—	—	—	529
BFW92A	n	SOT-37	15	25	200	2,8	2,5	800	13	800	150	7	26	14	10	537
BFW93	n	SOT-37	10	50	190	1,7	<5,0	500	10,5	800	100	5	24	30	5	541
BFX89	n	TO-72	15	25	200	1,2	3,3	200	—	—	—	—	—	—	—	549
BFY90	n	TO-72	15	25	200	1,4	2,5	200	—	—	—	—	—	—	—	561
2N918	n	TO-72	15	50	200	<0,9	<6,0	60	36	200	—	—	—	—	—	577

* Typical reference value at $d_{im} = -60$ dB.

** Typical reference values.

type	frequency range MHz	power gain at f = 50 MHz dB	slope cable equivalent dB	application	page
BGD102	40 - 450	18,5 ± 0,5	0,5 to 2,5	power doubler	583
BGD102E	40 - 450	18,5 ± 0,5	0,5 to 2,0	power doubler	587
BGD104	40 - 450	20,0 ± 0,5	0,5 to 2,5	power doubler	583
BGD104E	40 - 450	20,0 ± 0,5	0,5 to 2,0	power doubler	587
BGD502	40 - 550	18,5 ± 0,5	0,2 to 2,2	power doubler	591
BGD504	40 - 550	20,0 ± 0,5	0 to 2,0	power doubler	591
BGX885	40 - 860	17,0 ± 0,5	0,2 to 1,2	40 - 860 MHz amplifier	595
BGY50	40 - 300	12,5 ± 0,4	0,2 to 0,8	preamplifier	599
BGY51	40 - 300	12,5 ± 0,4	0,2 to 0,8	post amplifier	599
BGY52	40 - 300	16,4 ± 0,4	0 to 1,0	preamplifier	603
BGY53	40 - 300	16,4 ± 0,4	0 to 1,0	post amplifier	603
BGY54	40 - 300	17,0 ± 0,4	0 to 1,0	preamplifier	607
BGY55	40 - 300	17,0 ± 0,4	0 to 1,0	post amplifier	607
BGY56	40 - 300	22,0 ± 0,6	0 to 1,0	preamplifier	611
BGY57	40 - 300	22,0 ± 0,6	0 to 1,0	post amplifier	611
BGY58	40 - 300	33,0 ± 1,0	0,5 to 1,5	line extender	615
BGY58A	40 - 330	34,0 ± 1,0	0,5 to 1,5	line extender	619
BGY59	40 - 300	38,5 ± 1,0	0 to 1,5	line extender	623
BGY60	40 - 300	33,5 ± 1,0	0,5 to 1,5	interstage amplifier (2 x 17 dB)	627
BGY61	5 - 200	13,0 ± 0,5	–0,2 to 0,5	reverse amplifier	631
BGY65	5 - 200	18,5 ± 0,5	–0,2 to 0,5	reverse amplifier	635
BGY67	5 - 200	22,0 ± 0,5	–0,2 to 0,5	reverse amplifier	639
BGY67A	5 - 200	24,0 ± 0,5	–0,2 to 0,5	reverse amplifier	643
BGY70	40 - 450	12,5 ± 0,4	0,5 to 2,0	preamplifier	647
BGY71	40 - 450	12,5 ± 0,4	0,5 to 2,0	post amplifier	647
BGY74	40 - 450	17,0 ± 0,4	0,5 to 1,5	preamplifier	651
BGY75	40 - 450	17,0 ± 0,4	0,5 to 1,5	post amplifier	651
BGY78	40 - 450	34,0 ± 1,0	0,5 to 2,5	line extender	655
BGY84	40 - 450	17,0 ± 0,5	0,5 to 1,5	preamplifier	659
BGY84A	40 - 450	18,4 ± 0,4	0,3 to 1,5	preamplifier	663
BGY85	40 - 450	17,0 ± 0,5	0,5 to 1,5	post amplifier	659
BGY85A	40 - 450	18,4 ± 0,4	0,3 to 1,5	post amplifier	663
BGY86	40 - 450	22,0 ± 0,5	0,2 to 1,5	preamplifier	667
BGY87	40 - 450	22,0 ± 0,5	0,2 to 1,5	post amplifier	667
BGY88	40 - 450	34,5 ± 1,0	0,5 to 2,5	line extender	671
BGY584A	40 - 550	18,2 ± 0,5	0,5 to 2,0	preamplifier	675
BGY585A	40 - 550	18,2 ± 0,5	0,5 to 2,0	post amplifier	675
BGY586	40 - 550	22,0 ± 0,5	0,5 to 2,0	preamplifier	679
BGY587	40 - 550	22,0 ± 0,5	0,5 to 2,0	post amplifier	679

TYPE NUMBER SURVEY

type	frequency range MHz	transducer gain dB	output voltage at d_{im} = −60 dB dBμV	supply voltage V	page
OM320	40 - 860	15,5	⩾ 92	24	687
OM321	40 - 860	15,5	⩾ 98	24	693
OM322	40 - 860	15	⩾ 103	24	699
OM323	40 - 860	15	⩾ 112	24	705
OM323A	40 - 860	15	⩾ 112	24	705
OM335	40 - 860	27	⩾ 98	24	711
OM336	40 - 860	22	⩾ 105	24	717
OM337	40 - 860	26	⩾ 113	24	721
OM337A	40 - 860	26	⩾ 113	24	721
OM339	40 - 860	28	⩾ 105	24	729
OM345	40 - 860	12	⩾ 97	12	733
OM350	40 - 860	18	⩾ 98	12	739
OM360	40 - 860	23	⩾ 105	12	745
OM361	40 - 860	28	⩾ 105	12	751
OM370	40 - 860	28	⩾ 111	12	757

MARKING LIST

Types in SOT-23, SOT-89 and SOT-143 envelopes are marked with a code as listed below.
The actual type number and data code are on the packing.

The envelope number is mentioned in those cases where the same marking code appears twice.

mark	type no.
A1	BAW56
A2	BAT18
A3	BAT17
A4	BAV70
A5	BRY61
A51	BRY62
A6	BAS16
A61	BAS28
A7	BAV99
A8	BAS19
A81	BAS20
A82	BAS21
A9	
A91	BAS17
AA	BCW60A
(SOT-23)	
AA	BCX51
(SOT-89)	
AB	BCW60B
(SOT-23)	
AB	BCX51-6
(SOT-89)	
AC	BCW60C
(SOT-23)	
AC	BCX51-10
(SOT-89)	
AD	BCW60D
(SOT-23)	
AD	BCX51-16
(SOT-89)	
AE	BCX52
AF	BCX52-6
AG	BCX70G
AH	BCX70H
(SOT-23)	
AH	BCX53
(SOT-89)	
AJ	BCX70J
(SOT-23)	
AJ	BCX53-6
(SOT-89)	
AK	BCX70K
(SOT-23)	
AK	BCX53-10
(SOT-89)	
AL	BCX53-16
AM	BCX52-16
AR1	BSR40
AR2	BSR41
AR3	BSR42
AR4	BSR43
AS1	BST50
AS2	BST51
AS3	BST52
AT1	BST39
AT2	BST40
B1	
B2	BSV52
B3	
B4	BSV52R
B5	BSR12
B6	
B7	
B8	BSR12R
BA	BCW61A
(SOT-23)	
BA	BCX54
(SOT-89)	
BB	BCW61B
(SOT-23)	
BB	BCX54-6
(SOT-89)	
BC	BCW61C
(SOT-23)	
BC	BCX54-10
(SOT-89)	
BD	BCW61D
(SOT-23)	
BD	BCX54-16
(SOT-89)	
BE	BCX55
BF	BCX55-6
BG	BCX71G
(SOT-23)	
BG	BCX55-10
(SOT-89)	
BH	BCX71H
(SOT-23)	
BH	BCX56
(SOT-89)	
BJ	BCX71J
(SOT-23)	
BJ	BCX56-6
(SOT-89)	
BK	BCX71K
(SOT-23)	
BK	BCX56-10
(SOT-89)	
BL	BCX56-16
BM	BCX55-16
BR1	BSR30
BR2	BSR31
BR3	BSR32
BR4	BSR33
BS1	BST60
BS2	BST61
BS3	BST62
BT1	BST15
BT2	BST16
C1	BCW29
C2	BCW30
C3	
C4	BCW29R
C5	BCW30R
C6	
C7	BCF29
C77	BCF29R
C8	BCF30
C9	BCF30R
C91	BCV62
CA	BCX68
CAC	BC868
CE	BCX69
CEC	BC869
D1	BCW31
D2	BCW32
D3	BCW33
D4	BCW31R
D5	BCW32R
D6	BCW33R
D7	BCF32

mark	type no.
D77	BCF32R
D8	BCF33
D81	BCF33R
D91	BCV61
DA	BF622
DB	BF623
DC	BF620
DF	BF621
E1	BFS17
E2	
E3	
E4	BFS17R
E5	
E6	
E7	
E8	
F1	BFS18
F2	BFS19
F3	BF840
F31	BF841
F4	BFS18R
F5	BFS19R
F6	
F7	
F8	BF824
FA	BFQ17
FB	BFQ19
FD	BCV26
FF	BCV27
(SOT-23)	
FF	BFQ18A
(SOT-89)	
G1	BFS20
G2	BF550
G3	BF536
G4	BFS20R
G5	BF550R
G6	BF569
G7	BF579
G8	BF660
G81	BF660R
G9	BF767
H1	BCW69
H2	BCW70
H3	BCW89
H31	BCW89R
H4	BCW69R
H5	BCW70R
H6	
H7	BCF70
H71	BCF70R
H8	
H9	
H91	
K1	BCW71
K2	BCW72
K3	BCW81
K31	BCW81R
K4	BCW71R
K5	BCW72R
K6	
K7	BCV71
K71	BCV71R
K8	BCV72
K81	BCV72R
K9	BCF81
K91	BCF81R
KM	BST80
KN	BST84
KO	BST86
L2	
L20	BAS29
L21	BAS31
L22	BAS35
L3	
L30	BAV23
L4	BAT54
L41	BAT74
L5	
L51	BAS56
LM	BST120
LN	BST122
M1	BFR30
M2	BFR32
M3	BFT46
M31	BSD20
M32	BSD22
M4	BSR56
M5	BSR57
M6	BSR58
M61	
M62	PBMF4391
M63	PBMF4392
M64	PBMF4393
M74	BSS83
M8	
M89	BF989
M9	
M90	BF990
M91	BF991
M92	BF992
M94	BF994
M96	BF996
M97	BFR101A
M98	BFR101B
N1	BFR53
N2	
N3	
N4	BFR53R
N5	
O1	
O2	BST82
O3	
O4	
P1	BFR92
P2	BFR92A
P3	
P4	BFR92R
P5	BFR92AR
P6	
P7	
P8	
P9	
R1	BFR93
R2	BFR93A
R3	
R4	BFR93R
R5	BFR93AR
R6	
R7	
R8	
R9	
S1	BBY31
S2	BBY40
S3	
S4	
S5	
S6	BF510
S7	BF511
S8	BF512
S9	BF513
T1	BCX17
T2	BCX18
T3	BSS63
T4	BCX17R
T5	BCX18R
T6	BSS63R
T7	BSR15
T71	BSR15R
T8	BSR16
T81	BSR16R
T9	BSR18
T91	BSR18R
T92	BSR18A
T93	BSR18AR
U1	BCX19
U2	BCX20
U3	BSS64
U4	BCX19R
U5	BCX20R
U6	BSS64R
U7	BSR13
U8	BSR14
U81	BSR14R
U9	BSR17
U91	BSR17R
U92	BSR17A
U93	BSR17AR
V1	
V2	BFQ67
V3	BFG67
V4	BFT25R
V5	
V6	
V7	
V8	
V9	
W1	BFT92
W2	
W3	

mark	type no.
W4	BFT92R
W5	
W6	
W7	
W8	
W9	
X1	BFT93
X2	
X3	
X4	BFT93R
X5	
X6	
X7	
X8	
X9	
Y1	BZX84-C11
Y2	-C12
Y3	-C13
Y4	-C15
Y5	-C16
Y6	BZX84-C18
Y7	-C20
Y8	-C22
Y9	-C24
Y10	-C27
Y11	BZX84-C30
Y12	-C33
Y13	-C36
Y14	-C39
Y15	-C43
Y16	BZX84-C47
Y17	-C51
Y18	-C56
Y19	-C62
Y20	-C68
Y21	BZX84-C75
Z1	-C4V7
Z2	-C5V1
Z3	-C5V6
Z4	-C6V2
Z5	BZX84-C6V8
Z6	-C7V5
Z7	-C8V2
Z8	-C9V1
Z9	-C10
Z11	BZX84-C2V4
Z12	-C2V7
Z13	-C3V0
Z14	-C3V3
Z15	-C3V6
Z16	BZX84-C3V9
Z17	-C4V3
1A	BC846A
1BR	BC846AR
1E	BC847A
1ER	BC847AR
1F	BC847B
1FR	BC847BR
1G	BC847C
1GR	BC847CR
1J	BC848A
1JR	BC848AR
1K	BC848B
1KR	BC848BR
1L	BC848C
1LR	BC848CR
1V	BF820
1W	BF821
1X	BF822
1Y	BF823
2B	BC849B
2BR	BC849BR
2C	BC849C
2CR	BC849CR
2F	BC850B
2FR	BC850BR
2G	BC850C
2GR	BC850CR
2Y4	BZV49-C2V4
2Y7	BZV49-C2V7
3A	BC856A
3AR	BC856AR
3B	BC856B
3BR	BC856BR
3E	BC857A
3ER	BC857AR
3F	BC857B
3FR	BC857BR
3J	BC858A
3JR	BC858AR
3G	BC857C
3GR	BC857CR
3K	BC858B
3KR	BC858BR
3L	BC858C
3LR	BC858CR
3Y0	BZV49-C3V0
3Y3	BZV49-C3V3
3Y6	BZV49-C3V6
3Y9	BZV49-C3V9
4A	BC859A
4AR	BC859AR
4B	BC859B
4BR	BC859BR
4C	BC859C
4CR	BC859CR
4E	BC860A
4ER	BC860AR
4F	BC860B
4FR	BC860BR
4G	BC860C
4GR	BC860CR
4Y3	BZV49-C4V3
4Y7	BZV49-C4V7
5A	BC807-16
5AR	BC807-16R
5B	BC807-25
5BR	BC807-25R
5C	BC807-40
5CR	BC807-40R
5E	BC808-16
5ER	BC808-16R
5F	BC808-25
5FR	BC808-25R
5G	BC808-40
5GR	BC808-40R
5Y1	BZV49-C5V1
5Y6	BZV49-C5V6
6A	BC917-16
6AR	BC817-16R
6B	BC817-25
6BR	BC817-25R
6C	BC817-40
6CR	BC817-40R
6E	BC818-16
6ER	BC818-16R
6F	BC818-25
6FR	BC818-25R
6G	BC818-40
6GR	BC818-40R
6Y2	BZV49-C6V2
6Y8	-C6V8
7Y5	-C7V5
8Y2	-C8V2
9Y1	-C9V1
10Y	BZV49-C10
11Y	-C11
12Y	-C12
13Y	-C13
15Y	-C15
16Y	BZV49-C16
18Y	-C18
20Y	-C20
22Y	-C22
24Y	-C24
27Y	BZV49-C27
30Y	-C30
33Y	-C33
36Y	-C36
39Y	-C39
43Y	BZV49-C43
47Y	-C47
51Y	-C51
56Y	-C56
62Y	-C62
68Y	BZV49-C68
75Y	-C75

GENERAL

Type designation
Rating systems
Letter symbols
s-parameters
Tape and Reel Specifications
TO-92 variant transistors on tape
Soldering recommendations for SOT-23, SOT-143 and SOT-89
Soldering recommendations for SOT-37 and SOT-103
Soldering recommendations for SOT-48 and SOT-122
Mounting and soldering recommendations for CATV hybrids
Thermal Characteristics of SOT-23 and SOT-143 envelopes

PRO ELECTRON TYPE DESIGNATION CODE FOR SEMICONDUCTOR DEVICES

This type designation code applies to discrete semiconductor devices – as opposed to integrated circuits –, multiples of such devices and semiconductor chips.

"Although not all type numbers accord with the Pro Electron system, the following explanation is given for the ones that do."

A basic type number consists of:

TWO LETTERS FOLLOWED BY A SERIAL NUMBER

FIRST LETTER

The first letter gives information about the material used for the active part of the devices.

A. GERMANIUM or other material with band gap of 0,6 to 1,0 eV.
B. SILICON or other material with band gap of 1,0 to 1,3 eV.
C. GALLIUM-ARSENIDE or other material with band gap of 1,3 eV or more.
R. COMPOUND MATERIALS (e.g. Cadmium-Sulphide).

SECOND LETTER

The second letter indicates the function for which the device is primarily designed.

A. DIODE; signal, low power
B. DIODE; variable capacitance
C. TRANSISTOR; low power, audio frequency ($R_{th\ j\text{-}mb} > 15$ K/W)
D. TRANSISTOR; power, audio frequency ($R_{th\ j\text{-}mb} \leqslant 15$ K/W)
E. DIODE; tunnel
F. TRANSISTOR; low power, high frequency ($R_{th\ j\text{-}mb} > 15$ K/W)
G. MULTIPLE OF DISSIMILAR DEVICES – MISCELLANEOUS; e.g. oscillator
H. DIODE; magnetic sensitive
L. TRANSISTOR; power, high frequency ($R_{th\ j\text{-}mb} \leqslant 15$ K/W)
N. PHOTO-COUPLER
P. RADIATION DETECTOR; e.g. high sensitivity phototransistor
Q. RADIATION GENERATOR; e.g. light-emitting diode (LED)
R. CONTROL AND SWITCHING DEVICE; e.g. thyristor, low power ($R_{th\ j\text{-}mb} > 15$ K/W)
S. TRANSISTOR; low power, switching ($R_{th\ j\text{-}mb} > 15$ K/W)
T. CONTROL AND SWITCHING DEVICE; e.g. thyristor, power ($R_{th\ j\text{-}mb} \leqslant 15$ K/W)
U. TRANSISTOR; power, switching ($R_{th\ j\text{-}mb} \leqslant 15$ K/W)
X. DIODE: multiplier, e.g. varactor, step recovery
Y. DIODE; rectifying, booster
Z. DIODE; voltage reference or regulator (transient suppressor diode, with third letter W)

SERIAL NUMBER

Three figures, running from 100 to 999, for devices primarily intended for consumer equipment.*
One letter (Z, Y, X, etc.) and two figures, running from 10 to 99, for devices primarily intended for industrial/professional equipment.*
This letter has no fixed meaning except W, which is used for transient suppressor diodes.

VERSION LETTER

It indicates a minor variant of the basic type either electrically or mechanically. The letter never has a fixed meaning, except letter R, indicating reverse voltage, e.g. collector to case or anode to stud.

SUFFIX

Sub-classification can be used for devices supplied in a wide range of variants called associated types. Following sub-coding suffixes are in use:

1. VOLTAGE REFERENCE and VOLTAGE REGULATOR DIODES: *ONE LETTER and ONE NUMBER*
   The LETTER indicates the nominal tolerance of the Zener (regulation, working or reference) voltage
   A. 1% (according to IEC 63: series E96)
   B. 2% (according to IEC 63: series E48)
   C. 5% (according to IEC 63: series E24)
   D. 10% (according to IEC 63: series E12)
   E. 20% (according to IEC 63: series E6)
   The number denotes the typical operating (Zener) voltage related to the nominal current.rating for the whole range.
   The letter 'V' is used instead of the decimal point.

2. TRANSIENT SUPPRESSOR DIODES: *ONE NUMBER*
   The NUMBER indicates the maximum recommended continuous reversed (stand-off) voltage V_R. The letter 'V' is used as above.

3. CONVENTIONAL and CONTROLLED AVALANCHE RECTIFIER DIODES and THYRISTORS: *ONE NUMBER*
   The NUMBER indicates the rated maximum repetitive peak reverse voltage (V_{RRM}) or the rated repetitive peak off-state voltage (V_{DRM}), whichever is the lower. Reversed polarity is indicated by letter R, immediately after the number.

4. RADIATION DETECTORS: *ONE NUMBER,* preceded by a hyphen (–)
   The NUMBER indicates the depletion layer in μm. The resolution is indicated by a version LETTER.

5. ARRAY OF RADIATION DETECTORS and GENERATORS: *ONE NUMBER,* preceded by a stroke (/).
   The NUMBER indicates how many basic devices are assembled into the array.

---

* When these serial numbers are exhausted the serial number for consumer types may be extended to four figures, and that for industrial types to three figures.

RATING SYSTEMS

The rating systems described are those recommended by the International Electrotechnical Commission (IEC) in its Publication 134.

DEFINITIONS OF TERMS USED

Electronic device. An electronic tube or valve, transistor or other semiconductor device.

Note
This definition excludes inductors, capacitors, resistors and similar components.

Characteristic. A characteristic is an inherent and measurable property of a device. Such a property may be electrical, mechanical, thermal, hydraulic, electro-magnetic, or nuclear, and can be expressed as a value for stated or recognized conditions. A characteristic may also be a set of related values, usually shown in graphical form.

Bogey electronic device. An electronic device whose characteristics have the published nominal values for the type. A bogey electronic device for any particular application can be obtained by considering only those characteristics which are directly related to the application.

Rating. A value which establishes either a limiting capability or a limiting condition for an electronic device. It is determined for specified values of environment and operation, and may be stated in any suitable terms.

Note
Limiting conditions may be either maxima or minima.

Rating system. The set of principles upon which ratings are established and which determine their interpretation.

Note
The rating system indicates the division of responsibility between the device manufacturer and the circuit designer, with the object of ensuring that the working conditions do not exceed the ratings.

ABSOLUTE MAXIMUM RATING SYSTEM

Absolute maximum ratings are limiting values of operating and environmental conditions applicable to any electronic device of a specified type as defined by its published data, which should not be exceeded under the worst probable conditions.

These values are chosen by the device manufacturer to provide acceptable serviceability of the device, taking no responsibility for equipment variations, environmental variations, and the effects of changes in operating conditions due to variations in the characteristics of the device under consideration and of all other electronic devices in the equipment.

The equipment manufacturer should design so that, initially and throughout life, no absolute maximum value for the intended service is exceeded with any device under the worst probable operating conditions with respect to supply voltage variation, equipment component variation, equipment control adjustment, load variations, signal variation, environmental conditions, and variations in characteristics of the device under consideration and of all other electronic devices in the equipment.

DESIGN MAXIMUM RATING SYSTEM

Design maximum ratings are limiting values of operating and environmental conditions applicable to a bogey electronic device of a specified type as defined by its published data, and should not be exceeded under the worst probable conditions.

These values are chosen by the device manufacturer to provide acceptable serviceability of the device, taking responsibility for the effects of changes in operating conditions due to variations in the characteristics of the electronic device under consideration.

The equipment manufacturer should design so that, initially and throughout life, no design maximum value for the intended service is exceeded with a bogey device under the worst probable operating conditions with respect to supply voltage variation, equipment component variation, variation in characteristics of all other devices in the equipment, equipment control adjustment, load variation, signal variation and environmental conditions.

DESIGN CENTRE RATING SYSTEM

Design centre ratings are limiting values of operating and environmental conditions applicable to a bogey electronic device of a specified type as defined by its published data, and should not be exceeded under normal conditions.

These values are chosen by the device manufacturer to provide acceptable serviceability of the device in average applications, taking responsibility for normal changes in operating conditions due to rated supply voltage variation, equipment component variation, equipment control adjustment, load variation, signal variation, environmental conditions, and variations in the characteristics of all electronic devices.

The equipment manufacturer should design so that, initially, no design centre value for the intended service is exceeded with a bogey electronic device in equipment operating at the stated normal supply voltage.

LETTER SYMBOLS FOR TRANSISTORS AND SIGNAL DIODES

based on IEC Publication 148

LETTER SYMBOLS FOR CURRENTS, VOLTAGES AND POWERS

Basic letters

The basic letters to be used are:

I, i = current
V, v = voltage
P, p = power.

Lower-case basic letters shall be used for the representation of instantaneous values which vary with time.
In all other instances upper-case basic letters shall be used.

Subscripts

A, a	Anode terminal
(AV), (av)	Average value
B, b	Base terminal, for MOS devices: Substrate
(BR)	Breakdown
C, c	Collector terminal
D, d	Drain terminal
E, e	Emitter terminal
F, f	Forward
G, g	Gate terminal
K, k	Cathode terminal
M, m	Peak value
O, o	As third subscript: The terminal not mentioned is open circuited
R, r	As first subscript: Reverse. As second subscript: Repetitive. As third subscript: With a specified resistance between the terminal not mentioned and the reference terminal.
(RMS), (rms)	R.M.S. value
S, s	As first or second subscript: Source terminal (for FETS only) As second subscript: Non-repetitive (not for FETS) As third subscript: Short circuit between the terminal not mentioned and the reference terminal
X, x	Specified circuit
Z, z	Replaces R to indicate the actual working voltage, current or power of voltage reference and voltage regulator diodes.

Note: No additional subscript is used for d.c. values.

Upper-case subscripts shall be used for the indication of:

a) continuous (d.c.) values (without signal)
Example I_B

b) instantaneous total values
Example i_B

c) average total values
Example $I_{B(AV)}$

d) peak total values
Example I_{BM}

e) root-mean-square total values
Example $I_{B(RMS)}$

Lower-case subscripts shall be used for the indication of values applying to the varying component alone:

a) instantaneous values
Example i_b

b) root-mean-square values
Example $I_{b(rms)}$

c) peak values
Example I_{bm}

d) average values
Example $I_{b(av)}$

Note: If more than one subscript is used, subscript for which both styles exist shall either be all upper-case or all lower-case.

Additional rules for subscripts

Subscripts for currents

Transistors: If it is necessary to indicate the terminal carrying the current, this should be done by the first subscript (conventional current flow from the external circuit into the terminal is positive).

Examples: I_B, i_B, i_b, I_{bm}

Diodes: To indicate a forward current (conventional current flow into the anode terminal) the subscript F or f should be used; for a reverse current (conventional current flow out of the anode terminal) the subscript R or r should be used.

Examples: I_F, I_R, i_F, $I_{f(rms)}$

Subscripts for voltages

Transistors: If it is necessary to indicate the points between which a voltage is measured, this should be done by the first two subscripts. The first subscript indicates the terminal at which the voltage is measured and the second the reference terminal or the circuit node. Where there is no possibility of confusion, the second subscript may be omitted.

Examples: V_{BE}, v_{BE}, v_{be}, V_{bem}

Diodes: To indicate a forward voltage (anode positive with respect to cathode), the subscript F or f should be used; for a reverse voltage (anode negative with respect to cathode) the subscript R or r should be used.

Examples: V_F, V_R, v_F, V_{rm}

Subscripts for supply voltages or supply currents

Supply voltages or supply currents shall be indicated by repeating the appropriate terminal subscript.

Examples: V_{CC}, I_{EE}

Note: If it is necessary to indicate a reference terminal, this should be done by a third subscript

Example : V_{CCE}

Subscripts for devices having more than one terminal of the same kind

If a device has more than one terminal of the same kind, the subscript is formed by the appropriate letter for the terminal followed by a number; in the case of multiple subscripts, hyphens may be necessary to avoid misunderstanding.

Examples: I_{B2} = continuous (d.c.) current flowing into the second base terminal

V_{B2-E} = continuous (d.c.) voltage between the terminals of second base and emitter

Subscripts for multiple devices

For multiple unit devices, the subscripts are modified by a number preceding the letter subscript; in the case of multiple subscripts, hyphens may be necessary to avoid misunderstanding.

Examples: I_{2C} = continuous (d.c.) current flowing into the collector terminal of the second unit

V_{1C-2C} = continuous (d.c.) voltage between the collector terminals of the first and the second unit.

Application of the rules

The figure below represents a transistor collector current as a function of time. It consists of a continuous (d.c.) current and a varying component.

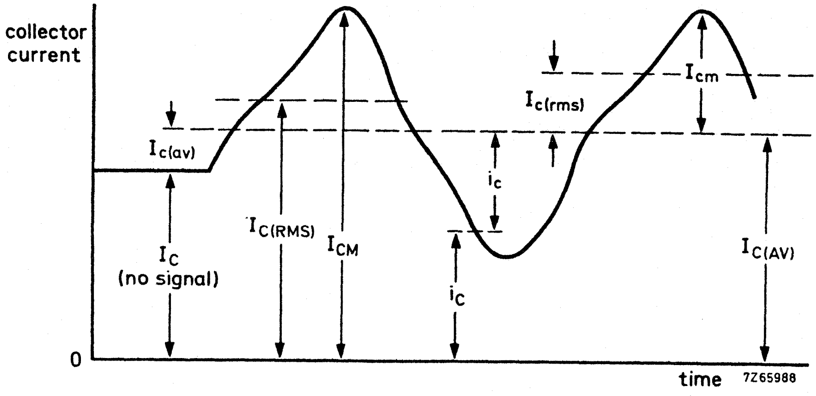

LETTER SYMBOLS FOR ELECTRICAL PARAMETERE METERS

Defenition

For the purpose of this Publication, the term "electrical parameter" applies to four-pole matrix parameters, elements of electrical equivalent circuits, electrical impedances and admittances, inductances and capacitances.

Basic letters

The following is a list of the most important basic letters used for electrical parameters of semiconductor devices.

B, b = susceptance; imaginary part of an admittance

C = capacitance

G, g = conductance; real part of an admittance

H, h = hybrid parameter

L = inductance

R, r = resistance; real part of an impedance

X, x = reactance; imaginary part of an impedance

Y, y = admittance;

Z, z = impedance;

Upper-case letters shall be used for the representation of:

a) electrical parameters of external circuits and of circuits in which the device forms only a part;

b) all inductances and capacitances.

Lower-case letters shall be used for the representation of electrical parameters inherent in the device (with the exception of inductances and capacitances).

Subscripts

General subscripts

The following is a list of the most important general subscripts used for electrical parameters of semiconductor devices:

F, f = forward; forward transfer
I, i (or 1) = input
L, l = load
O, o (or 2) = output
R, r = reverse; reverse transfer
S, s = source

Examples: Z_S, h_f, h_F

The upper-case variant of a subscript shall be used for the designation of static (d.c.) values.

Examples : h_{FE} = static value of forward current transfer ratio in common-emitter configuration (d.c. current gain)
R_E = d.c. value of the external emitter resistance.

Note: The static value is the slope of the line from the origin to the operating point on the appropriate characteristic curve, i.e. the quotient of the appropriate electrical quantities at the operating point.

The lower-case variant of a subscript shall be used for the designation of small-signal values.

Examples: h_{fe} = small-signal value of the short-circuit forward current transfer ratio in common-emitter configuration
$Z_e = R_e + jX_e$ = small-signal value of the external impedance

Note: If more than one subscript is used, subscripts for which both styles exist shall either be all upper-case or all lower-case

Examples: h_{FE}, y_{RE}, h_{fe}

Subscripts for four-pole matrix parameters

The first letter subscript (or double numeric subscript) indicates input, output, forward transfer or reverse transfer

Examples: h_i (or h_{11})
h_o (or h_{22})
h_f (or h_{21})
h_r (or h_{12})

A further subscript is used for the identification of the circuit configuration. When no confusion is possible, this further subscript may be omitted.

Examples: h_{fe} (or h_{21e}), h_{FE} (or h_{21E})

Distinction between real and imaginary parts

If it is necessary to distinguish between real and imaginary parts of electrical parameters, no additional subscripts should be used. If basic symbols for the real and imaginary parts exist, these may be used.

Examples: $Z_i = R_i + jX_i$
$y_{fe} = g_{fe} + jb_{fe}$

If such symbols do not exist or if they are not suitable, the following notation shall be used:

Examples: Re (h_{ib}) etc. for the real part of h_{ib}
Im (h_{ib}) etc. for the imaginary part of h_{ib}

SCATTERING PARAMETERS

In distinction to the conventional h, y and z-parameters, s-parameters relate to travelling wave conditions. The figure below shows a two-port network with the incident and reflected waves a_1, b_1, a_2 and b_2.

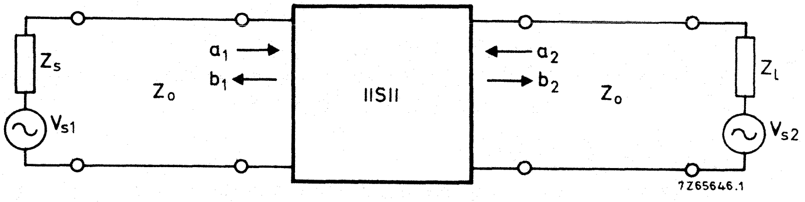

$$a_1 = \frac{V_{i1}}{\sqrt{Z_o}} \qquad a_2 = \frac{V_{i2}}{\sqrt{Z_o}} \qquad ^{1)}$$

$$b_1 = \frac{V_{r1}}{\sqrt{Z_o}} \qquad b_2 = \frac{V_{r2}}{\sqrt{Z_o}}$$

Z_o = characteristic impedance of the transmission line in which the two-port is connected.

V_i = incident voltage

V_r = reflected (generated) voltage

The four-pole equations for s-parameters are:

$$b_1 = s_{11}a_1 + s_{12}a_2$$
$$b_2 = s_{21}a_1 + s_{22}a_2$$

Using the subscripts i for 11, r for 12, f for 21 and o for 22, it follows that:

$$s_i = s_{11} = \left.\frac{b_1}{a_1}\right| a_2 = 0$$
$$s_r = s_{12} = \left.\frac{b_1}{a_2}\right| a_1 = 0$$
$$s_f = s_{21} = \left.\frac{b_2}{a_1}\right| a_2 = 0$$
$$s_o = s_{22} = \left.\frac{b_2}{a_2}\right| a_1 = 0$$

---

1) The squares of these quantities have the dimension of power.

The s-parameters can be named and expressed as follows:

$s_i = s_{11}$ = Input reflection coefficient.
The complex ratio of the reflected wave and the incident wave at the input, under the conditions $Z_l = Z_o = 50\ \Omega$ and $V_{s2} = 0$.

$s_r = s_{12}$ = Reverse transmission coefficient.
The complex ratio of the generated wave at the input and the incident wave at the output, under the conditions $Z_s = Z_o = 50\ \Omega$ and $V_{s1} = 0$.

$s_f = s_{21}$ = Forward transmission coefficient.
The complex ratio of the generated wave at the output and the incident wave at the input, under the conditions $Z_l = Z_o = 50\ \Omega$ and $V_{s2} = 0$.

$s_o = s_{22}$ = Output reflection coefficient.
The complex ratio of the reflected wave and the incident wave at the output, under the conditions $Z_s = Z_o = 50\ \Omega$ and $V_{s1} = 0$.

TAPE AND REEL SPECIFICATION

Semiconductors in SOT-23 and SOT-143 encapsulations can be delivered in reel packing for automatic placement on hybrid circuits and printed circuit boards. The devices are placed with the mounting side downwards in compartments.

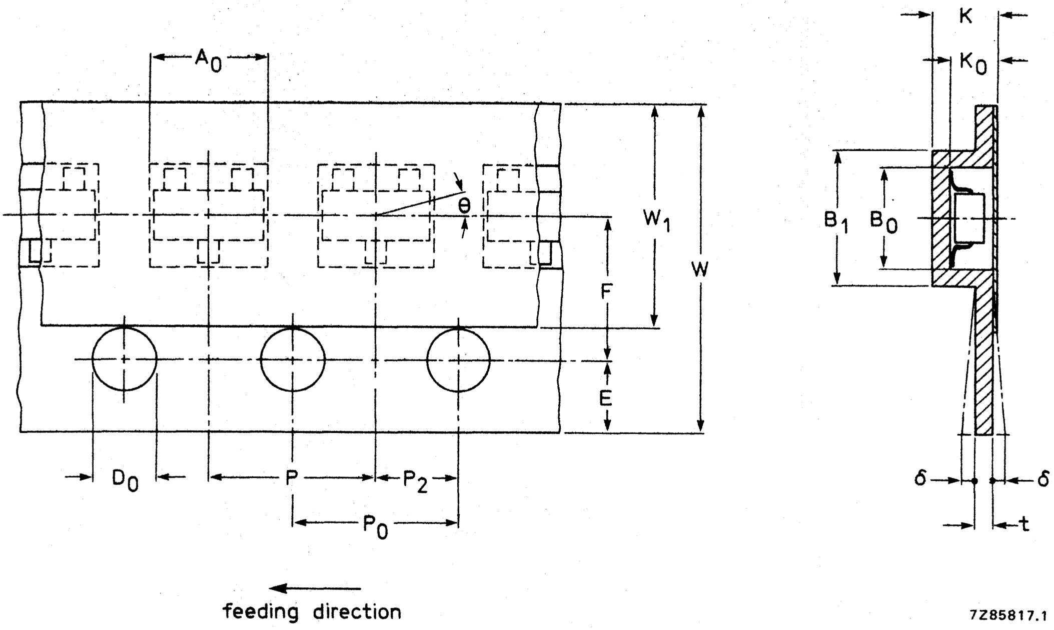

Fig. 1 Configuration of bandolier. Dimensions in mm.

Compartment			tol.
length	A_0	component length	+0,2
width	B_0	component width	+0,2
depth	K_0	0,95	+0,2
width outside	B_1	3,3	max.
pitch	P	4,0	±0,1
deviation	Θ	15°	max.
Sprocket hole			
diameter	D_0	1,5	+0,1
pitch	P_0	4,0	±0,1
distance	E	1,75	±0,1
cumulative (10) pitch error		±0,1	

Centre line dimensions			tol.
length direction	P_2	2,0	±0,05
width direction	F	3,5	±0,05
Fixing tape			
width	W_1	5,5	±0,25
thickness	–	0,1	max.
Carrier tape			
width	W	8,0	±0,2
bending	δ	0,3	max.
thickness	t	0,4	max.
Overall thickness	K	1,5	max.

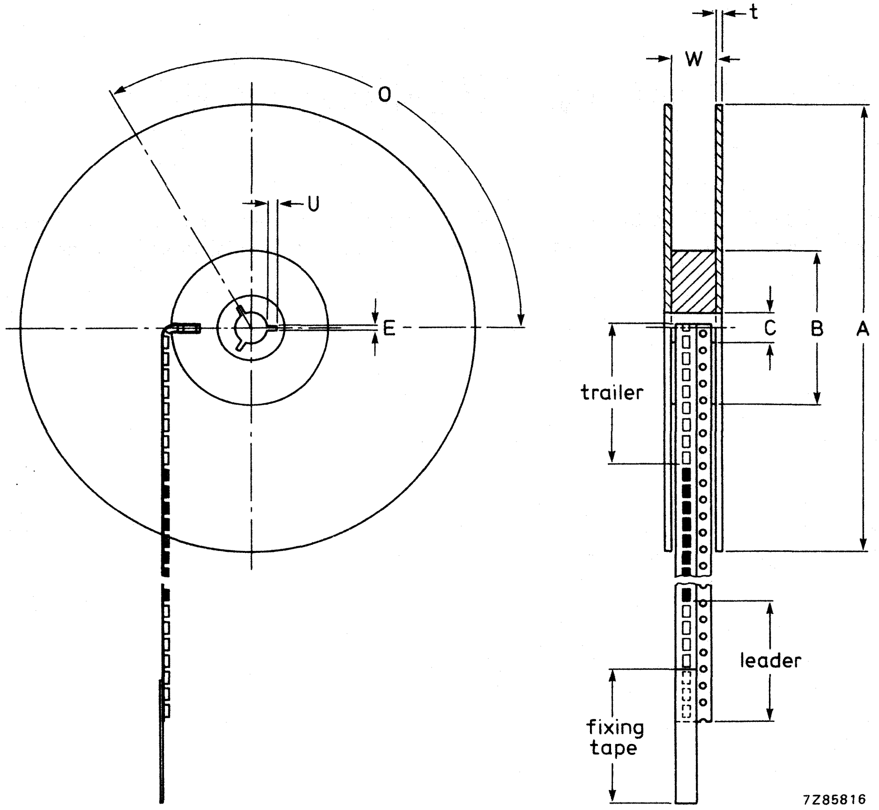

Fig. 2 Configuration of reel and flange (dimensions in mm).

Flange			tol.
diameter	A	180	+0 −2
thickness	t	1,5	+0,5 −0,1
space between flanges	W	9,5	± 0,5

Hub			tol.
diameter	B	62	± 1,5
spindle hole	C	12,75	+0,15 −0
key slit			
width	E	2	± 0,5
depth	U	4	± 0,5
location	O	120	degrees

Amount of devices per reel

The bandolier of a 180 mm reel contains at least 2500 devices with no more than 15 empty compartments (0,5%). Three consecutive empty places might be found provided this gap is followed by 6 consecutive devices.

The carrier tape (leader) starts with at least 75 empty positions (equivalent to 300 mm); the covering foil is at least 300 mm. In order to fix the carrier tape a self-adhesive tape of 20 to 50 mm is applied.

At the end of the bandolier (trailer) at least 75 empty positions (equivalent to a length of 300 mm) and 300 mm foil. For fixing onto the reel a self-adhesive tape of 20 to 50 mm is applied.

TO-92 VARIANT TRANSISTORS ON TAPE

MECHANICAL DATA Dimensions in mm

Fig. 1 (see table below).

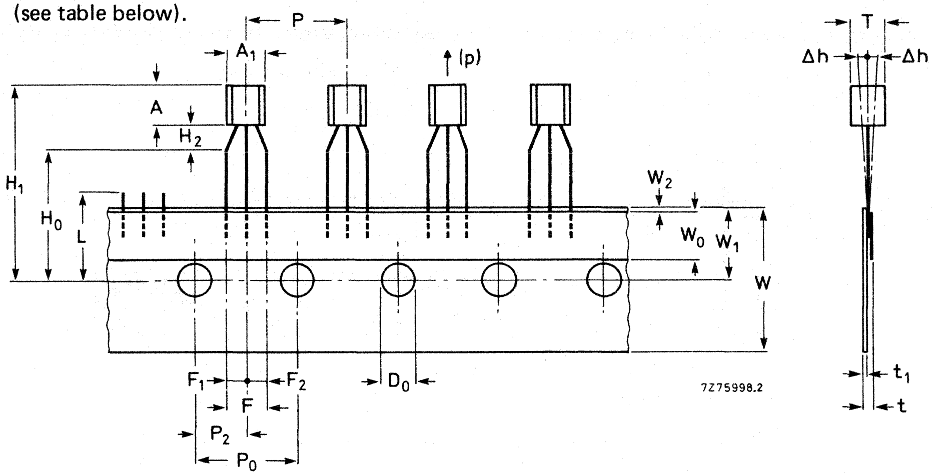

Item	Symbol	Specifications				Remarks
		min.	nom.	max.	tol.	
Body width	A_1	4,0		4,8		
Body height	A	4,8		5,2		
Body thickness	T	3,9		4,2		
Pitch of component	P		12,7		± 1	
Feed hole pitch	P_0		12,7		± 0,3	Cumulative pitch error 1,0 mm/20 pitch
Feed hole centre to component centre	P_2		6,35		± 0,4	To be measured at bottom of clinch
Distance between outer leads	F		5,08		+ 0,6 −0,2	
Component alignment	Δh		0	1		At top of body
Tape width	W		18		± 0,5	
Hold-down tape width	W_0		6		± 0,2	
Hole position	W_1		9		+ 0,7 −0,5	
Hold-down tape position	W_2		0,5		± 0,2	
Lead wire clinch height	H_0		16		± 0,5	
Component height	H_1			32,25		
Length of snipped leads	L			11,0		
Feed hole diameter	D_0		4		± 0,2	
Total tape thickness	t			1,2		t_1 0,3-0,6
Lead-to-lead distance	F_1, F_2		2,54		+ 0,4 −0,1	
Clinch height	H_2			3		
Pull-out force	(p)	6N				

PACKING

The transistors are supplied on tape in boxes (ammopack) or on reels. The number per reel is 1600 and per ammobox 2000*.

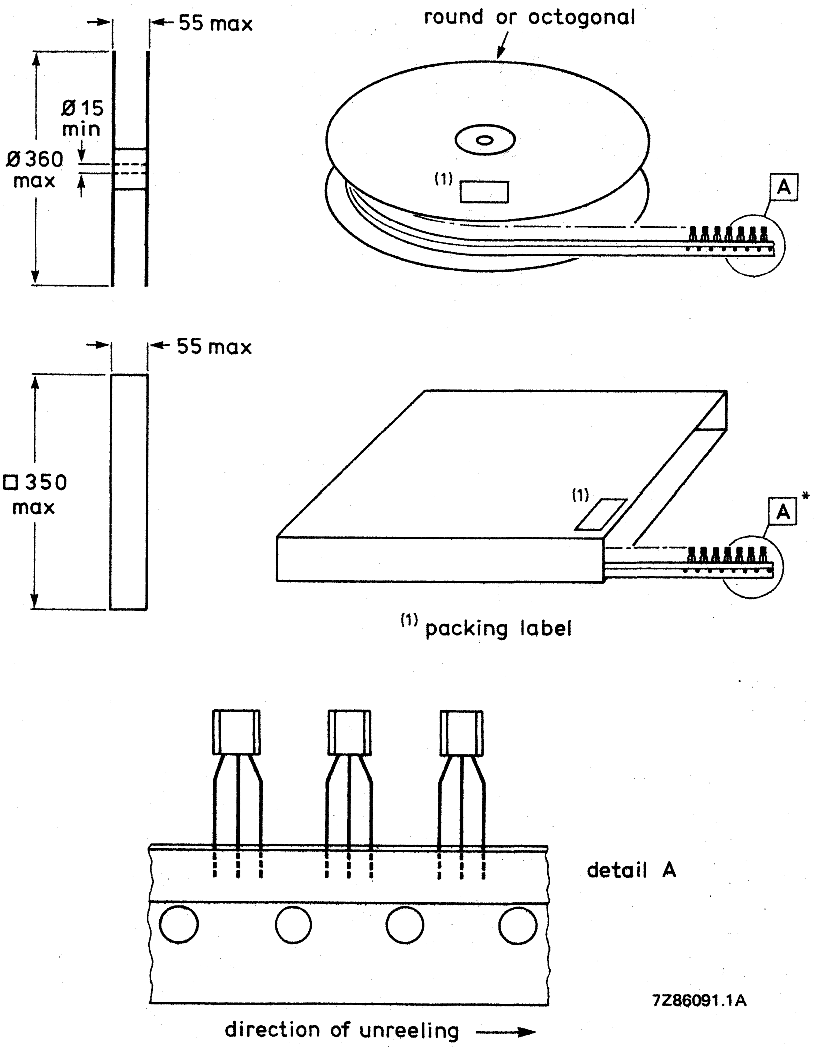

Fig. 2 Dimensions (in mm) of reel and box.

DROPOUTS

A maximum of 0,5% of the specified number of transistors in each packing may be missing. Up to 3 consecutive components may be missing provided the gap is followed by 6 consecutive components.

TAPE SPLICING

Slice the carrier tape on the back and/or front so that the feed hole pitch (P_o) is maintained (see Fig. 3).

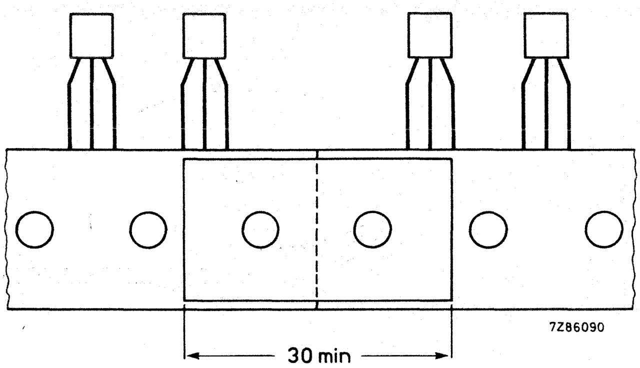

Fig. 3 Jointing tape with splicing patch.

* The ammobox has 80 layers of 25 transistors each.
Each layer contains 25 transistors plus one empty position in order to fold the layer correctly.

The ammobox is accessible from both sides enabling the user to choose between "normal" (see Fig. 2) and "reverse" tape.

SOLDERING RECOMMENDATIONS
SOT-23, SOT-143 AND SOT-89 ENVELOPES

SOT-23, SOT-143 and SOT-89 devices are ideally suited for placement onto thick and thin film substrates and printed circuit boards.

To assure reliable and consistent connections particular attention should be paid to:

1. **Flux**

   A non-active flux is recommended. Where active fluxes are employed, great care in subsequent substrate cleaning must be exercised.

2. **Metal-alloy solder or solder paste**

   Correct choice of solder alloy or solder paste to be employed e.g. 62% Sn, 36% Pb, 2% Ag or 60% Sn/40% Pb. Any paste used should contain at least 85% metal dry weight.

3. **Soldering temperature**

   This will vary according to the actual method employed.

REFLOW SOLDERING

The preferred technique for mounting microminiature components on hybrid thick and thin-film is the method of reflow soldering.

The tags of SOT-23, SOT-143 and SOT-89 envelopes are pre-tinned and the best results are obtained if a similar solder is applied to the corresponding soldering areas on the substrate. This can be done by either dipping the substrate in a solder bath or by screen printing a solder paste.
The maximum temperature of the leads or tab during the soldering cycle should not exceed 285 °C.
The most economic method of soldering is a process in which all different components are soldered simultaneously for example SOT-23, SOT-143 or SOT-89 devices, capacitors and resistors.

Having first been fluxed, all components are positioned on the substrate. The slight adhesive force of the flux is sufficient to keep the components in place. Solder paste contains a flux and has therefore good inherent adhesive properties which eases positioning of the components.

With the components in position the substrate is heated to a point where the solder begins to flow. This can be done on a heating plate or on a conveyor belt running through an infrared tunnel. The maximum allowed temperature of the plastic body of a device must be kept below 280 °C during the soldering cycle. For further temperature behaviour during the soldering process see Figs 2 and 3.

The surface tension of the liquid solder tends to draw the tags of the device towards the centre of the soldering area and has thus a correcting effect on slight mispositionings. However, if the layout leaves something to be desired the same effect can result in undesirable shifts; particularly if the soldering areas on the substrate and the components are not concentrally arranged. This problem can be solved using a standard contact pattern, which leaves sufficient scope for the self-positioning effect (see Figs 4 and 5).

After cooling the connections may be visually inspected and, where necessary, repaired with a light soldering iron. Finally any remaining flux must be removed carefully.

IMMERSION SOLDERING

Where a complete substrate or printed circuit board is immersed in solder:
a. The temperature of the soldering bath should not exceed 280 °C.
b. The duration of the soldering cycle should not exceed 10 seconds.
c. Forced cooling may be applied (see Fig. 1).

HAND SOLDERING

It is possible to solder microminiature devices with a light hand-held soldering iron, but this method has obvious drawbacks and should therefore be restricted to laboratory use and/or incidental repairs on production circuits.

1. It is time-consuming and expensive.
2. The device cannot be positioned accurately and therefore the connecting tags may come into contact with the substrate and damage it.
3. There is a great risk of breaking either substrate or even internal connections inside the encapsulation.
4. The envelope may be damaged by the iron.

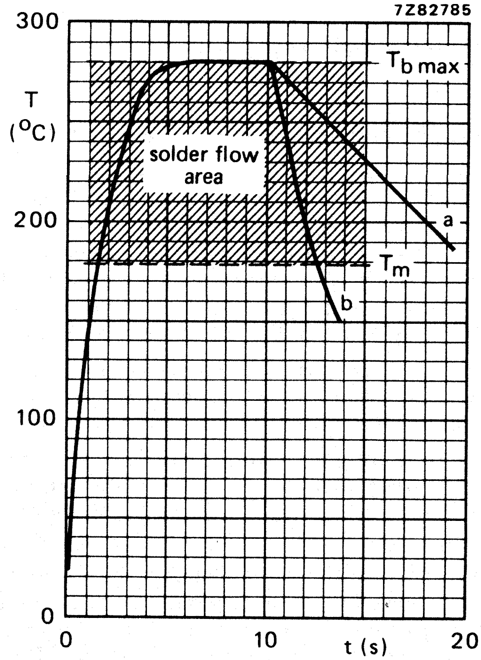

Fig. 1 Device temperature during *immersion* soldering.

Maximum time of immersion in soldering bath is 10 seconds at an ambient temperature of 25 °C.
a = free convection cooling; b = forced cooling.
$T_{b\,max}$ = maximum bath temperature (280 °C).
T_m = melting temperature of solder (179 °C).

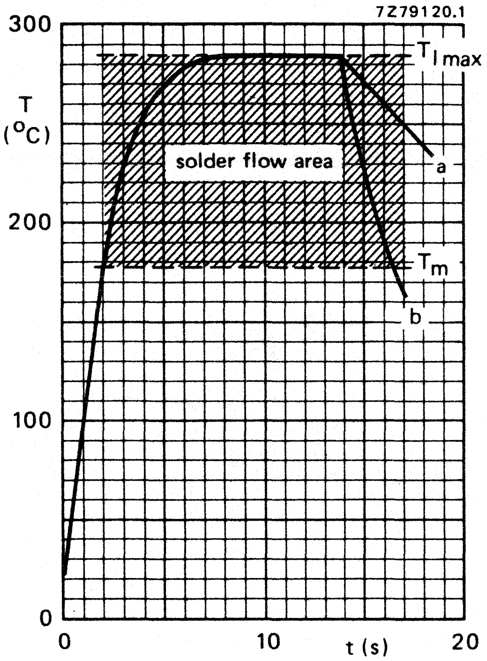

a = free convection cooling.

b = permissible forced cooling.

$T_{l\,max}$ = Maximum lead or tab temperature = 285 °C.

T_m = Melting point of the solder is 179 °C.

T_{amb} = 25 °C.

Time of heat supply:
without preheating max. 14 s
with preheating max. 10 s

Maximum time of preheating 45 s

Fig. 2 Reflow soldering without preheating.

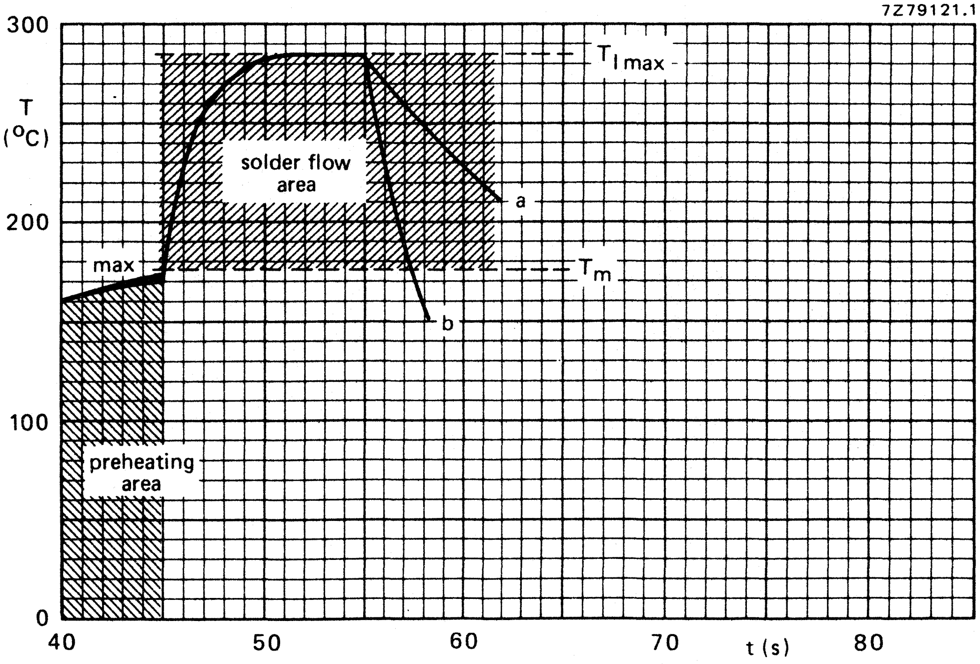

Fig. 3 Reflow soldering with preheating.

Minimum required dimensions of metal connection pads on hybrid thick and thin-film substrates.

Dimensions in mm

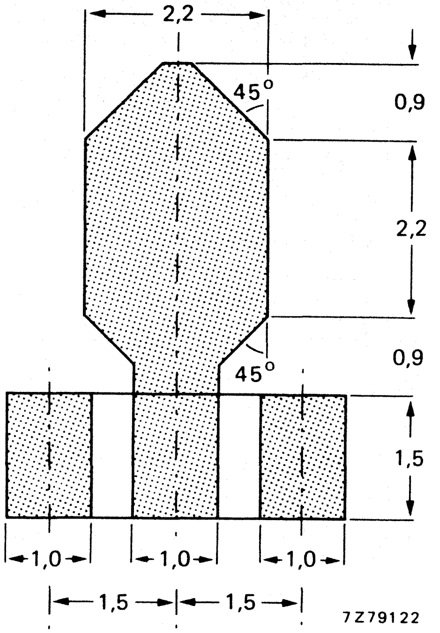

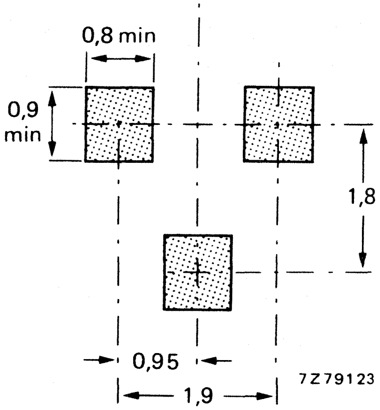

Fig. 4 SOT-23 pattern.

Fig. 5 SOT-89 pattern.

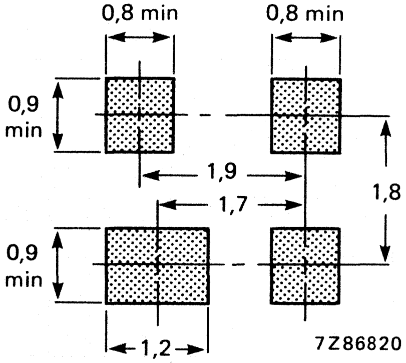

Fig. 6 SOT-143 pattern.

SOLDERING RECOMMENDATIONS SOT-37 AND SOT-103

Transistors in SOT-37 and SOT-103 envelopes may be mounted with leads flat (Fig. 1) or bent (Figs 2 and 3). Different soldering procedures apply for the different styles of mounting.

FLAT-LEAD MOUNTING

Soldering by hand

Avoid putting any force on the leads during or just after soldering.

Solder the three leads one at a time, *not* simultaneously.

Proceed from one lead to the adjacent lead, *not* to the opposite one.

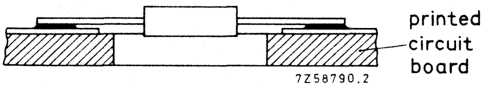

Fig. 1

Solder temperature	max.	300 °C
Soldering time	max.	5 s
Solder-to-case distance	min.	2 mm

BENT-LEAD MOUNTING

If leads are bent, all three may be soldered simultaneously if desired.

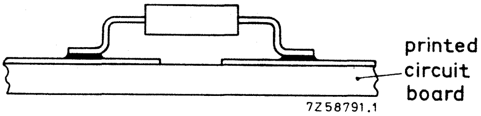

Fig. 2

Solder temperature	max.	300 °C
Soldering time	max.	10 s

DIP OR WAVE SOLDERING

When dip or wave soldering, the maximum allowable temperature of the solder is 260 °C. This temperature must not be in contact with the joint for more than 5 seconds. The total contact time of successive solder waves must not exceed 5 seconds. The device may be mounted up to the lead projections, but the temperature of the body must not exceed the specified storage maximum.

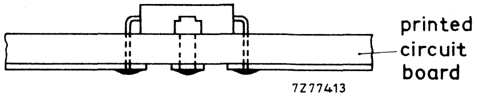

Fig. 3

Solder temperature	max.	260 °C
Soldering time	max.	5 s

SOLDER RECOMMENDATIONS FOR
SOT-48 AND SOT-122

A brass nut is supplied with each transistor for securing it to a heatsink.
Screw thread, diameter and nuts:

stud diameter	thread	maximum diameter of threaded stud	nut thickness
¼″	8-32UNC-2A(B)	4,14 mm	3,5 mm SOT-48 5,0 mm SOT-122

To ensure optimum heat transfer and to avoid damage to the threaded stud of the transistor the following recommendations should be observed:

1. Diameter of the mounting hole in the heatsink 4,15 + 0,05; –0 mm (max. 4,2 mm).
2. Heatsink surfaces at the mounting hole to be flat, parallel, and free of burrs or oxydation.
3. Torque on nut: minimum 0,75 Nm (7,5 kgcm), maximum 0,85 Nm (8,5 kgcm).
4. Recommended distance from the top surface of the heatsink to surface of printed-circuit board:
   2,9 + 0; –0,2 mm.

Tension in the transistor leads sets the limit on spacing between heatsink and printed-circuit board; in general, the leads can withstand more pull in the downward direction than in the upward direction.

Solder the leads to the connection pads with resin-cored tin-lead solder, using an iron of normal temperature. Soldering iron temperatures as high as 350 °C are safely tolerable; the transistor can withstand an interior temperature of 250 °C for about ten minutes.

The leads may be tinned, if required, by dipping them into a solder bath at about 230 °C; each lead may be dipped up to its full length. A flux of the quality of Super-Safe is recommended; after tinning, surplus flux should be rinsed away with tap water.

MOUNTING AND SOLDERING RECOMMENDATIONS FOR CATV HYBRIDS

Mounting

1. The heatsink surface must be flat, free of burrs, oxidization and parallel to the mounting surface.
2. The heatsink, mounting base and ground leads should be properly r.f. grounded.
3. Heatsink compound should be applied sparingly and evenly on the mounting base.

   Suitable heatsink compounds:

   Dow Corning 340,
   Eccotherm TC-5 (E&C),
   Wakefield 120.
4. When mounting CATV hybrid components, the UNC screws must first be turned finger-tight. The screws should then be tightened to within the tolerance of minimum 0,5 Nm to maximum 0,7 Nm.

Soldering

Devices may be soldered directly into a circuit using a soldering iron with a maximum temperature of 260 °C for not more than 3 s when the soldered joints are a minimum of 3 mm from the module.

THERMAL CHARACTERISTICS
FOR SOT-23 AND SOT-143 ENVELOPES

The heat generated in a semiconductor chip normally flows by various paths to the surroundings (ambient).

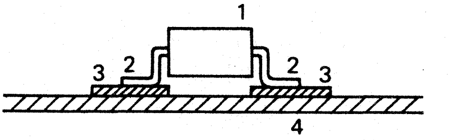

Fig. 1.

1. Heat radiation from the envelope to ambient (1).
   This heat transfer can be neglected when the envelope is mounted on a substrate or printed circuit board.
2. Heat transmission via leads (2) soldering points (3) and substrate (4).

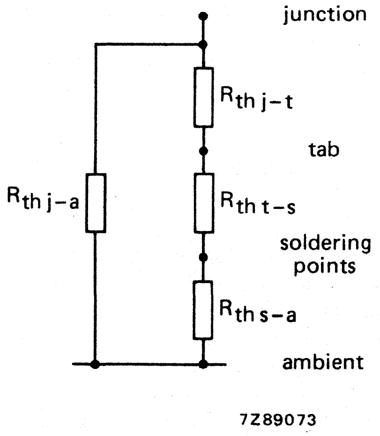

Fig. 2 Thermal behaviour of heat flow when the device is mounted on a substrate or printed circuit board.

$R_{th\ j\text{-}t}$ = Thermal resistance from junction to tab.
$R_{th\ t\text{-}s}$ = Thermal resistance from tab to soldering points.
$R_{th\ s\text{-}a}$ = Thermal resistance from soldering points to ambient.
$R_{th\ j\text{-}a}$ = Thermal resistance from junction to ambient.

Heat transfer directly from envelope to ambient

This depends on the difference between the temperatures of envelope and the surroundings. When the device is mounted on a substrate or printed circuit board direct heat flow can usually be neglected in relation to the heat flow via leads and substrate.
Thus the thermal model can be as in Fig. 3.

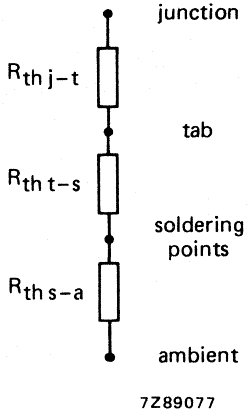

Fig. 3 Basic thermal model.

Heat transfer from junction to tab

This is an internal heat transfer and has been measured. In general it is:

for high-frequency transistors, low-power diodes and (MOS) FETs	60 K/W
for low-frequency and switching transistors	50 K/W
for low-frequency medium-power transistors	30 K/W

Heat transfer from tab to soldering points

This value has also been measured for SOT-23 with $P_{tot} < 350$ mW	280 K/W
for types of semiconductors in this envelope with $P_{tot} < 425$ mW	260 K/W
for types of semiconductors in a SOT-143 envelope this value is	310 K/W

Heat transfer from soldering points to ambient

This depends on the shape and material of tracks and substrate. In figures 4 and 5 standard mounting conditions are given to set up the maximum power ratings for SOT-23 and SOT-143 encapsulations.

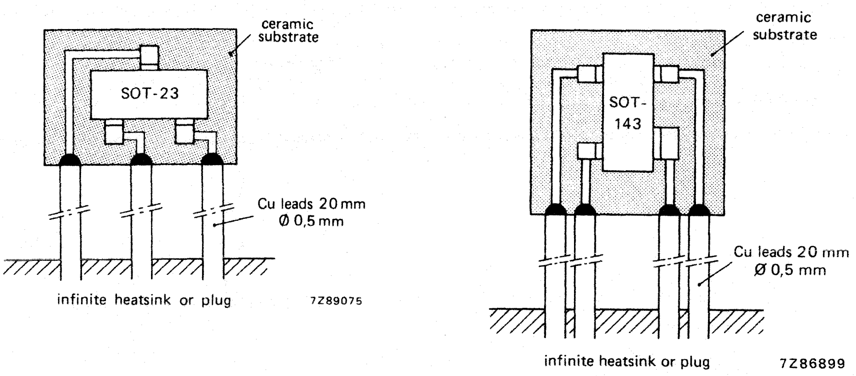

Fig. 4 Test circuits SOT-23 and SOT-143 mounting conditions on a ceramic substrate.

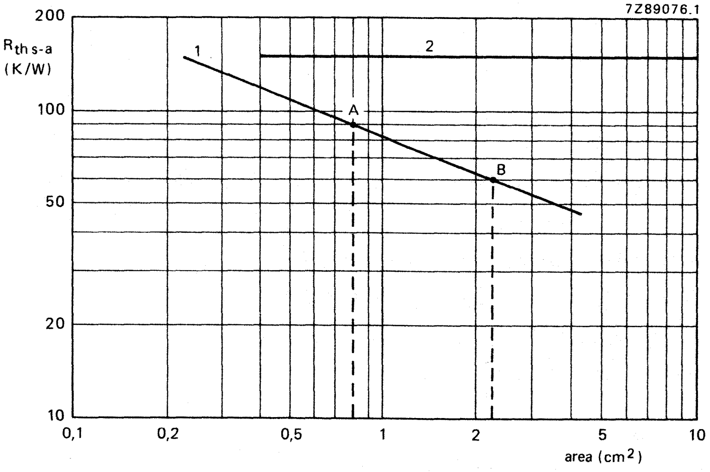

Fig. 5 Heat transfer from soldering points to ambient.

1. Ceramic substrate

Point A on the curve in Fig. 5 is for an area of the ceramic substrate of 8 mm x 10 mm x 0,7 mm for the maximum rating of all high-frequency, low-frequency and switching transistors and also for all diodes.
Point B on the curve in Fig. 5 is for an area of the ceramic substrate of 15 mm x 15 mm x 0,7 mm for the maximum rating of low-frequency medium-power semiconductors.

2. Printed circuit board

$R_{th\ s\text{-}a}$ = 150 K/W for SOT-23 and SOT-143 envelopes mounted on a printed circuit board.

The values for the thermal resistance from junction to tab, and tab to soldering points, are given earlier and in Fig. 5.
The formula for devices in SOT-23 with one crystal can be generalized:

$$T_j = P\,(R_{th\ j\text{-}t} + R_{th\ t\text{-}s} + R_{th\ s\text{-}a}) + T_{amb}$$

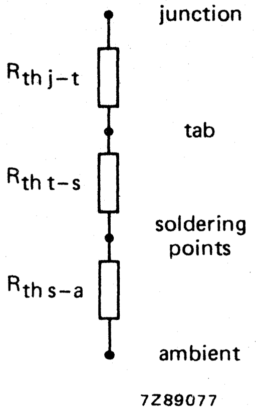

Fig. 6 Thermal model of SOT-23 envelopes with one crystal.

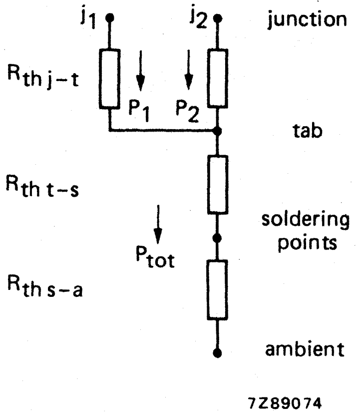

Fig. 7 Thermal model of SOT-23 envelopes with two crystals (double diode).

The formulae for devices with two crystals (double diodes) are:

$$T_{tab} = P_{tot} \cdot (R_{th\ t\text{-}s} + R_{th\ s\text{-}a}) + T_{amb} = P_{tot}\,(280 + 90) + T_{amb}$$

$$T_{j1} = (P_1 \times R_{th\ j\text{-}t}) + T_{tab} = P_1 \cdot 60 + T_{tab}$$

$$T_{j2} = (P_2 \times R_{th\ j\text{-}t}) + T_{tab} = P_2 \cdot 60 + T_{tab}$$

As mentioned with Fig. 3:

$R_{th\ j\text{-}t}$ for diodes is 60 K/W.

$R_{th\ s\text{-}a}$ (area 8 mm x 10 mm x 0,7 mm) = 90 K/W.

$R_{th\ t\text{-}s}$ for all semiconductors in SOT-23 = 280 K/W.

Thus:

$$T_{j1} = 60\,P_1 + 370\,P_{tot} + T_{amb}.$$

$$T_{j2} = 60\,P_2 + 370\,P_{tot} + T_{amb}.$$

DEVICE DATA

Wideband transistors

N-P-N H.F. WIDEBAND TRANSISTOR ←

N-P-N transistor in a TO-92 envelope intended for application as an amplifier or oscillator in the v.h.f. and u.h.f. range.

QUICK REFERENCE DATA

Collector-base voltage (open emitter)	V_{CBO}	max.	25	V	
Collector-emitter voltage (open base)	V_{CEO}	max.	15	V	
Collector current (d.c.)	I_C	max.	25	mA	
Total power dissipation up to T_{amb} = 60 °C	P_{tot}	max.	360	mW	
D.C. current gain					
I_C = 2 mA; V_{CE} = 5 V	h_{FE}	min.	20		←
I_C = 20 mA; V_{CE} = 5 V		35 to	70		
Transition frequency at f = 500 MHz					
I_C = 15 mA; V_{CE} = 5 V	f_T	typ.	1,8	GHz	

MECHANICAL DATA

Dimensions in mm

Fig. 1 TO-92 variant.

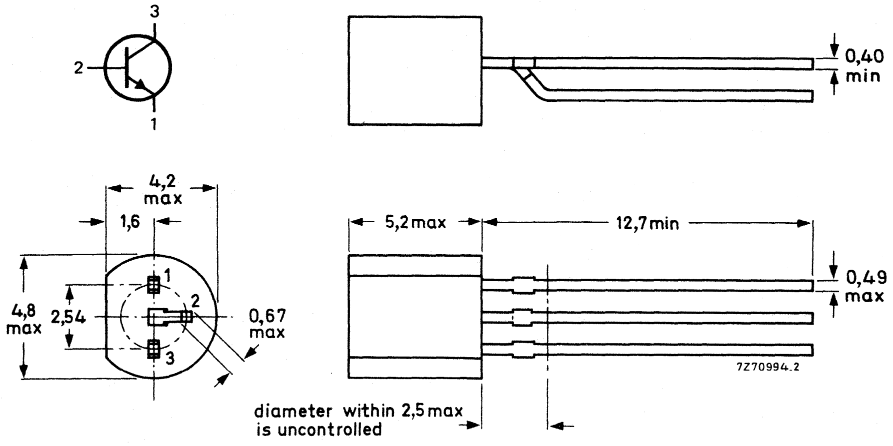

RATINGS

Limiting values in accordance with the Absolute Maximum System (IEC 134)

Collector-base voltage (open emitter)	V_{CBO}	max.	25	V
→ Collector-emitter voltage				
open base	V_{CEO}	max.	15	V
$R_{BE} \leqslant 50\ \Omega$	V_{CER}	max.	25	V
Emitter-base voltage (open collector)	V_{EBO}	max.	3,5	V
→ Collector current				
d.c.	I_C	max.	25	mA
peak value; $t_p < 1\ \mu s$	I_{CM}	max.	50	mA
Total power dissipation up to $T_{amb} = 60\ ^oC$	P_{tot}	max.	360	mW
Junction temperature	T_j	max.	150	^oC
Storage temperature	T_{stg}		−55 to +150	^oC

THERMAL RESISTANCE

→ From junction to ambient in free air	$R_{th\ j\text{-}a}$	=	250	K/W

CHARACTERISTICS

$T_j = 25\ ^oC$ unless otherwise specified

Collector cut-off current				
$V_{CB} = 15$ V; $I_E = 0$	I_{CBO}	max.	50	nA
Emitter cut-off current				
$V_{EB} = 2$ V; $I_C = 0$	I_{EBO}	max.	1,0	μA
Saturation voltages				
$I_C = 25$ mA; $I_B = 1{,}25$ mA	V_{CEsat}	max.	1,0	V
	V_{BEsat}	max.	1,0	V
D.C. current gain				
$I_C = 2$ mA; $V_{CE} = 5$ V	h_{FE}	min.	20	
$I_C = 20$ mA; $V_{CE} = 5$ V			35 to 70	
Transition frequency at f = 500 MHz				
$I_C = 15$ mA; $V_{CE} = 5$ V	f_T	typ.	1,8	GHz
Feedback capacitance				
→ $I_C = 2$ mA; $V_{CE} = 5$ V; $T_{amb} = 25\ ^oC$	C_{re}	typ.	1,1	pF
Noise figure at f = 100 MHz				
→ $I_C = 2$ mA; $V_{CE} = 5$ V; $Z_S = 60\ \Omega$; $T_{amb} = 25\ ^oC$	F	typ.	4,0	dB
Noise figure at f = 200 MHz				
→ $I_C = 2$ mA; $V_{CE} = 5$ V; $Z_S = 60\ \Omega$; $T_{amb} = 25\ ^oC$	F	typ.	3,0	dB
Power gain at f = 100 MHz				
→ $I_C = 2$ mA; $V_{CE} = 5$ V; $Z_S = 60\ \Omega$; $R_L = 2\ k\Omega$; $T_{amb} = 25\ ^oC$	G_p	typ.	16	dB
Power gain at f = 200 MHz				
→ $I_C = 2$ mA; $V_{CE} = 5$ V; $Z_S = 60\ \Omega$; $R_L = 920\ \Omega$; $T_{amb} = 25\ ^oC$	G_p	typ.	16	dB

N-P-N H.F. WIDEBAND TRANSISTOR

N-P-N transistor in a TO-92 envelope. It is primarily intended for use in H.F. amplifiers and u.h.f. oscillators.

QUICK REFERENCE DATA

Collector-emitter breakdown voltage	$V_{(BR)CEO}$	max.	15	V
Collector-base breakdown voltage	$V_{(BR)CBO}$	max.	25	V
Collector current (d.c.)	I_C	max.	25	mA
Total power dissipation up to T_{amb} = 25 °C	P_{tot}	max.	500	mW
Junction temperature	T_j	max.	150	°C
D.C. current gain I_C = 5 mA; V_{CE} = 10 V	h_{FE}	min. max.	25 250	
Transition frequency at f = 100 MHz I_C = 5 mA; V_{CE} = 10 V	f_T	typ.	1,8	GHz
Noise figure at Z_S = 60 Ω I_C = 5 mA; V_{CE} = 10 V; f = 800 MHz	F	typ.	5,0	dB

Fig. 1 TO-92var.

Dimensions in mm

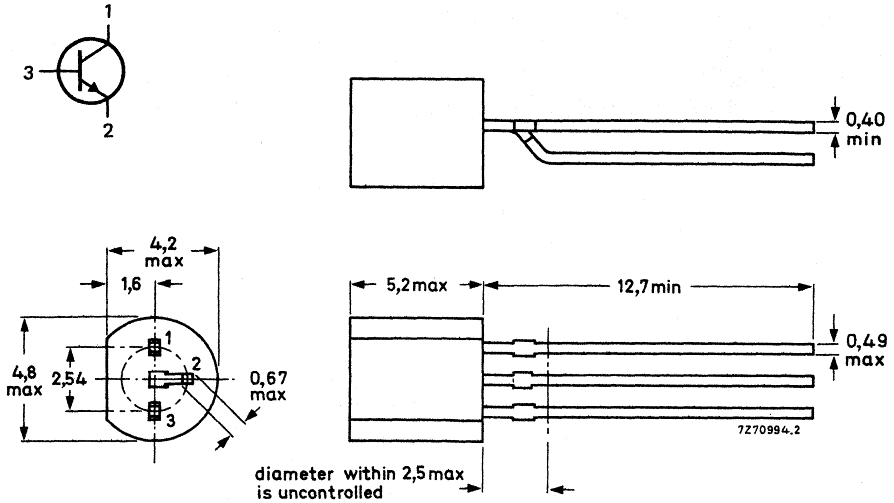

RATINGS

Limiting values in accordance with the Absolute Maximum System (IEC 134)

Collector-emitter voltage	V_{CEO}	max.	15	V
Collector-base voltage	V_{CBO}	max.	25	V
Collector current (d.c.)	I_C	max.	25	mA
Total power dissipation up to T_{amb} = 25 °C	P_{tot}	max.	500	mW
Junction temperature	T_j	max.	150	°C
Storage temperature	T_s		−65 to +150	°C

THERMAL RESISTANCE

→ From junction to ambient in free air	$R_{th\ j\text{-}a}$	=	250	K/W

CHARACTERISTICS

→ T_j = 25 °C unless otherwise specified

Collector-emitter breakdown voltage I_C = 1 mA; I_B = 0	$V_{(BR)CEO}$	max.	15	V
Collector-base breakdown voltage → I_C = 10 µA; I_E = 0	$V_{(BR)CBO}$	max.	25	V
Collector cut-off current I_E = 0; V_{CB} = 10 V	I_{CBO}	max.	50	nA
D.C. current gain I_C = 5 mA; V_{CE} = 10 V	h_{FE}	min. max.	25 250	
Collector-emitter saturation voltage I_C = 10 mA, I_B = 1 mA	V_{CEsat}	max.	0,5	V
Transition frequency at f = 100 MHz I_C = 5 mA; V_{CE} = 10 V	f_T	typ.	1,8	GHz
→ Noise figure at Z_S = 60 Ω I_C = 5 mA; V_{CE} = 10 V; f = 800 MHz; T_{amb} = 25 °C	F	typ.	5,0	dB

P-N-P 2 GHz WIDEBAND TRANSISTOR

P-N-P transistor in a four-lead dual emitter plastic envelope (SOT-103). This device is designed for application in wideband amplifiers, such as MATV and CATV systems, up to 2 GHz.

N-P-N complement is BFG91A.

QUICK REFERENCE DATA

Collector-base voltage (open emitter)	$-V_{CBO}$	max.	15	V
Collector-emitter voltage (open base)	$-V_{CEO}$	max.	12	V
Collector current (d.c.)	$-I_C$	max.	35	mA
Total power dissipation up to T_{amb} = 60 °C	P_{tot}	max.	180	mW
Junction temperature	T_j	max.	150	°C
D.C. current gain $-I_C$ = 30 mA; $-V_{CE}$ = 5 V	h_{FE}	min.	20	
Transition frequency at f = 500 MHz $-I_C$ = 30 mA; $-V_{CE}$ = 5 V	f_T	typ.	5,0	GHz
Feedback capacitance at f = 1 MHz I_C = 0; $-V_{CE}$ = 10 V	C_{re}	typ.	0,8	pF
Noise figure at optimum source impedance $-I_C$ = 30 mA; $-V_{CE}$ = 8 V; f = 800 MHz	F	typ.	3,7	dB

MECHANICAL DATA

Dimensions in mm

Fig. 1 SOT-103.

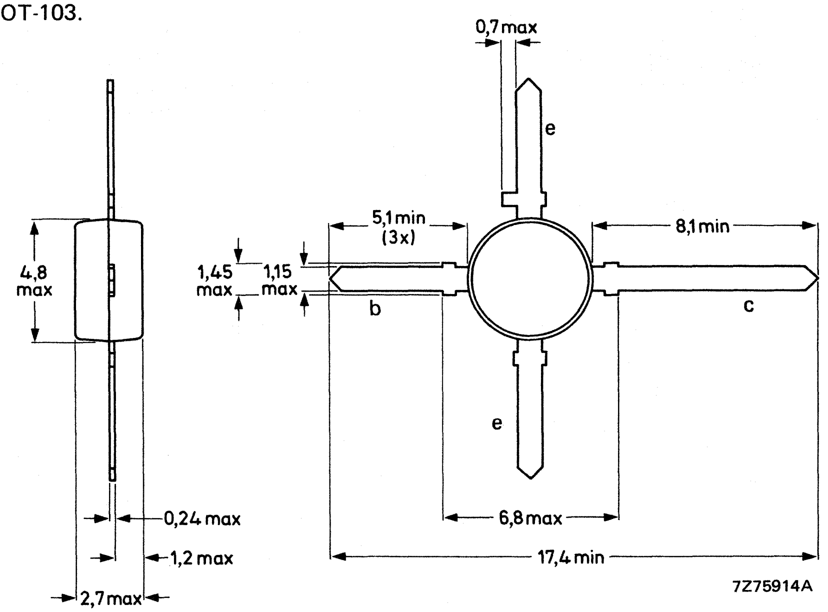

RATINGS

Limiting values in accordance with the Absolute Maximum System (IEC 134)

Collector-base voltage (open emitter)	$-V_{CBO}$	max.	15	V
Collector-emitter voltage (open base)	$-V_{CEO}$	max.	12	V
Emitter-base voltage (open collector)	$-V_{EBO}$	max.	2	V
Collector current				
d.c.	$-I_C$	max.	35	mA
peak value; $f > 1$ MHz	$-I_{CM}$	max.	50	mA
Total power dissipation up to $T_{amb} = 60\ ^oC$	P_{tot}	max.	180	mW
Storage temperature	T_{stg}		−65 to +150	^oC
Junction temperature	T_j	max.	150	^oC

THERMAL RESISTANCE

From junction to ambient (free air) mounted on a fibre-glass print (see Fig. 2)	$R_{th\ j\text{-}a}$	500	K/W

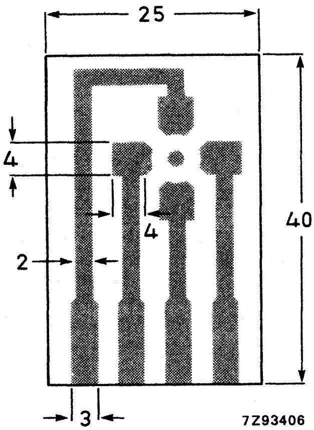

Fig. 2 Requirements for fibre-glass print (dimensions in mm). Single-sided 35 μm Cu-clad epoxy fibre-glass print, thickness 1,5 mm. Tracks are fully tin-lead plated. Shaded area is Cu.

CHARACTERISTICS

$T_j = 25\ ^oC$ unless otherwise specified

Collector cut-off current $I_E = 0$; $-V_{CB} = 5$ V	$-I_{CBO}$	max.	50	nA
D.C. current gain $-I_C = 30$ mA; $-V_{CE} = 5$ V	h_{FE}	min.	20	
Transition frequency at f = 500 MHz $-I_C = 30$ mA; $-V_{CE} = 5$ V	f_T	typ.	5,0	GHz
Noise figure at optimum source impedance and $-V_{CE} = 8$ V; f = 800 MHz; $T_{amb} = 25\ ^oC$				
at $-I_C = 4$ mA	F	typ.	2,3	dB
at $-I_C = 30$ mA		typ.	3,7	dB

Collector capacitance at f = 1 MHz $I_E = i_e = 0; -V_{CB} = 10$ V	C_c	typ.	1,2 pF	←
Emitter capacitance at f = 1 MHz $I_C = i_c = 0; -V_{EB} = 0,5$ V	C_e	typ.	1,8 pF	
Feedback capacitance at f = 1 MHz $I_C = 0; -V_{CE} = 10$ V	C_{re}	typ.	0,8 pF	
Maximum unilateral power gain (s_{re} assumed to be zero) $G_{UM} = 10 \log \frac{\lvert s_{fe} \rvert^2}{[1-\lvert s_{ie} \rvert^2]\,[1-\lvert s_{oe} \rvert^2]}$				←
$-I_C = 30$ mA; $-V_{CE} = 5$ V; f = 800 MHz; $T_{amb} = 25$ °C $-I_C = 30$ mA; $-V_{CE} = 5$ V; f = 2 GHz; $T_{amb} = 25$ °C	G_{UM}	typ. typ.	14,5 dB 7,0 dB	
Output voltage at $d_{im} = -60$ dB $I_C = -30$ mA; $-V_{CE} = 8$ V; $R_L = 75\ \Omega$; $T_{amb} = 25$ °C $V_p = V_o$ at $d_{im} = -60$ dB ; $f_p = 795,25$ MHz $V_q = V_o -6$ dB ; $f_q = 803,25$ MHz $V_r = V_o -6$ dB ; $f_r = 805,25$ MHz measured at $f_{(p+q-r)} = 793,25$ MHz	V_o	typ.	400 mV	←
Second harmonic distortion (see Fig. 3) $-I_C = 30$ mA; $-V_{CE} = 8$ V; $R_L = 75\ \Omega$; VSWR < 2; $T_{amb} = 25$ °C $V_p = V_o = 60$ mV at $f_p = 250$ MHz $V_q = V_o = 60$ mV at $f_q = 560$ MHz measured at $f_{(p+q)} = 810$ MHz	d_2	typ.	−50 dB	

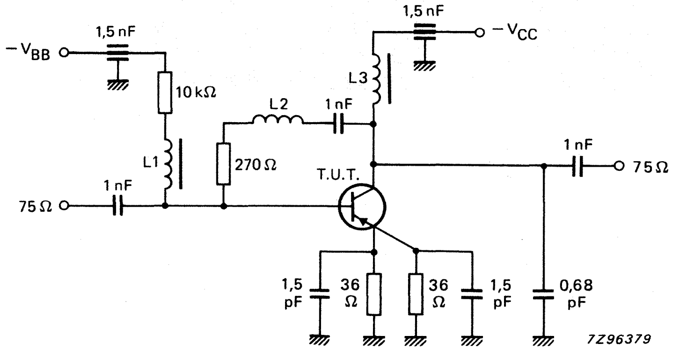

←

Fig. 3 Intermodulation distortion and second harmonic distortion MATV test circuit.

L1 = L3 = 5 μH micro-choke
L2 = 3 turns Cu wire (0,4 mm), internal diameter 3 mm, winding pitch 1 mm

→ **s-parameters** (common emitter) at $-V_{CE} = 5$ V; typical values

$-I_C$ mA	f MHz	s_{ie}	s_{fe}	s_{re}	s_{oe}	G_{UM} dB
5	40	0,54/ −29,5°	12,3/168,4°	0,02/ 78,6°	0,97/ −11,8°	36,1
	100	0,56/ −64,9°	11,1/149,9°	0,04/ 65,3°	0,89/ −27,2°	29,3
	200	0,61/−103,7°	8,9/130,0°	0,07/ 50,0°	0,73/ −44,8°	24,3
	500	0,65/−154,8°	4,5/ 97,4°	0,09/ 34,6°	0,42/ −69,9°	16,4
	800	0,66/−171,6°	3,1/ 82,9°	0,10/ 34,4°	0,41/ −80,1°	13,0
	1000	0,68/−179,6°	2,5/ 73,4°	0,11/ 34,2°	0,42/ −89,7°	11,6
	2000	0,67/+144,3°	1,3/ 49,7°	0,15/ 49,5°	0,29/−115,8°	5,1
10	40	0,31/ −53,6°	18,0/165,0°	0,01/ 76,2°	0,95/ −16,1°	35,6
	100	0,43/ −98,5°	15,4/144,0°	0,03/ 61,9°	0,82/ −36,2°	29,5
	200	0,56/−131,6°	11,3/123,0°	0,05/ 49,0°	0,63/ −57,4°	24,9
	500	0,65/−169,0°	5,3/ 94,1°	0,07/ 43,5°	0,33/ −86,7°	17,3
	800	0,66/+178,8°	3,5/ 81,7°	0,08/ 46,8°	0,33/ −95,0°	13,8
	1000	0,67/+172,7°	2,8/ 72,7°	0,09/ 47,6°	0,35/−104,4°	12,1
	2000	0,67/+140,0°	1,5/ 51,5°	0,15/ 58,5°	0,22/−133,4°	6,2
20	40	0,21/−116,7°	22,6/162,0°	0,01/ 73,9°	0,91/ −20,1°	35,1
	100	0,42/−134,0°	18,5/138,9°	0,02/ 61,2°	0,75/ −44,0°	29,8
	200	0,57/−154,2°	12,7/118,0°	0,03/ 52,4°	0,55/ −67,8°	25,3
	500	0,66/−178,3°	5,8/ 92,1°	0,05/ 54,5°	0,29/−101,8°	18,0
	800	0,66/+173,0°	3,8/ 79,9°	0,07/ 57,8°	0,29/−108,3°	14,4
	1000	0,66/+168,7°	3,0/ 72,0°	0,09/ 57,6°	0,31/−116,7°	12,5
	2000	0,68/+137,5°	1,6/ 52,1°	0,16/ 63,8°	0,20/−150,2°	6,8
30	40	0,29/−147,1°	24,0/161,0°	0,01/ 72,2°	0,88/ −21,8°	34,6
	100	0,47/−151,7°	19,3/137,4°	0,02/ 62,0°	0,72/ −47,2°	29,9
	200	0,59/−162,6°	13,0/116,4°	0,03/ 56,1°	0,51/ −72,0°	25,4
	500	0,68/+177,7°	5,7/ 91,3°	0,05/ 60,1°	0,27/−107,9°	18,2
	800	0,66/+170,0°	3,8/ 79,3°	0,07/ 62,5°	0,27/−113,2°	14,5
	1000	0,67/+166,6°	3,0/ 71,6°	0,08/ 61,8°	0,30/−121,1°	12,5
	2000	0,70/+136,5°	1,6/ 52,0°	0,16/ 65,9°	0,20/−156,2°	7,0

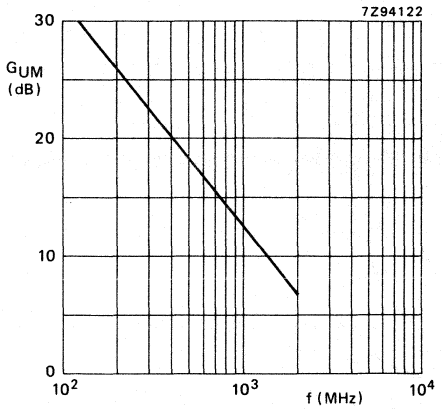

Fig. 4 $-V_{CE} = 5$ V; $-I_C = 30$ mA; $T_{amb} = 25$ °C; typical values.

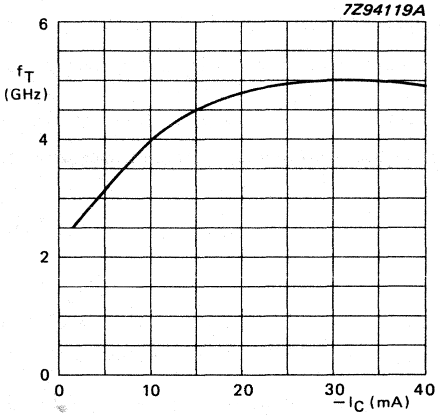

Fig. 5 $-V_{CE} = 5$ V; f = 500 MHz; $T_{amb} = 25$ °C; typical values.

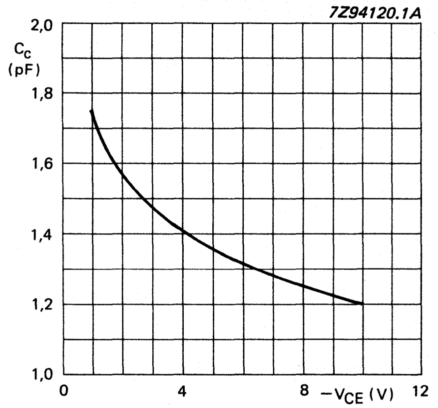

Fig. 6 $I_E = i_e = 0$; f = 1 MHz; $T_j = 25$ °C; typical values.

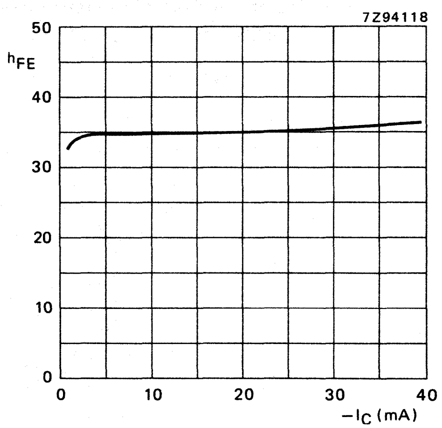

Fig. 7 $-V_{CE} = 5$ V; $T_j = 25$ °C; typical values.

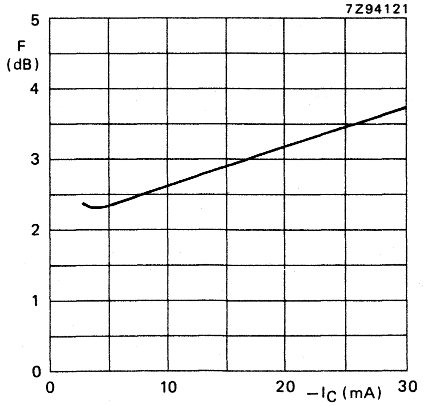

Fig. 8 $-V_{CE} = 8$ V; f = 800 MHz; Z_S = opt.; $T_{amb} = 25$ °C; typical values.

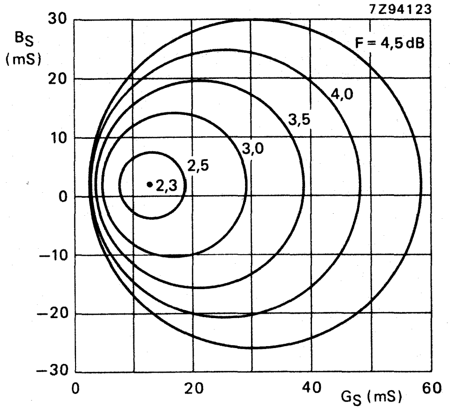

→ Fig. 9 Circles of constant noise figure; $-V_{CE}$ = 8 V $-I_C$ = 4 mA; f = 800 MHz; T_{amb} = 25 °C; typical values.

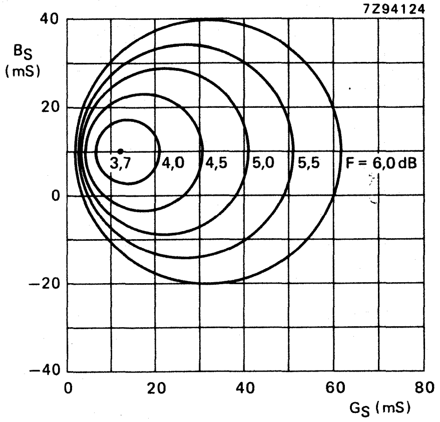

→ Fig. 10 Circles of constant noise figure; $-V_{CE}$ = 8 V; $-I_C$ = 30 mA; f = 800 MHz; T_{amb} = 25 °C; typical values.

P-N-P 2 GHz WIDEBAND TRANSISTOR

P-N-P transistor in a four-lead dual emitter plastic envelope (SOT-103). The device is designed for application in wideband amplifiers, such as MATV and CATV systems, up to 2 GHz.

N-P-N complement is BFG96.

QUICK REFERENCE DATA

Collector-base voltage (open emitter)	$-V_{CBO}$	max.	20	V
Collector-emitter voltage (open base)	$-V_{CEO}$	max.	15	V
Collector current (d.c.)	$-I_C$	max.	75	mA
Total power dissipation up to T_{amb} = 70 °C	P_{tot}	max.	700	mW
Junction temperature	T_j	max.	175	°C
D.C. current gain $-I_C$ = 50 mA; $-V_{CE}$ = 10 V	h_{FE}	min.	20	
Transition frequency at f = 500 MHz $-I_C$ = 50 mA; $-V_{CE}$ = 10 V	f_T	typ.	4,5	GHz
Feedback capacitance at f = 1 MHz I_C = 0; $-V_{CE}$ = 10 V	C_{re}	typ.	1,4	pF
Noise figure at optimum source impedance $-I_C$ = 50 mA; $-V_{CE}$ = 10 V; f = 800 MHz	F	typ.	4,3	dB

MECHANICAL DATA

Dimensions in mm

Fig. 1 SOT-103.

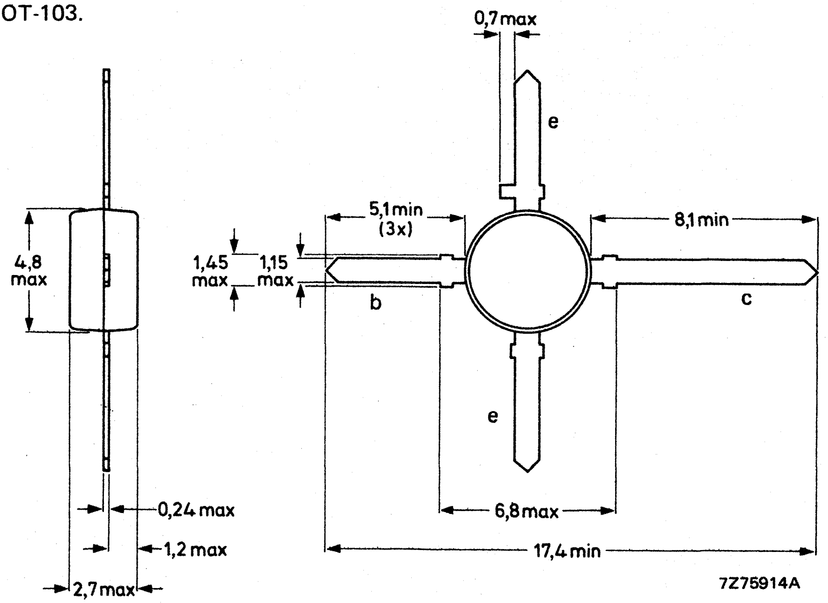

RATINGS

Limiting values in accordance with the Absolute Maximum System (IEC 134)

Collector-base voltage (open emitter)	$-V_{CBO}$	max.	20	V
Collector-emitter voltage (open base)	$-V_{CEO}$	max.	15	V
Emitter-base voltage (open collector)	$-V_{EBO}$	max.	3	V
Collector current				
d.c.	$-I_C$	max.	75	mA
peak value; > 1 MHz	$-I_{CM}$	max.	150	mA
Total power dissipation up to T_{amb} = 70 °C mounted on print (see Fig. 2)	P_{tot}	max.	700	mW
Storage temperature	T_{stg}		−65 to +175	°C
Junction temperature	T_j	max.	175	°C

THERMAL RESISTANCE

From junction to ambient (free air) mounted on a fibre-glass print (see Fig. 2)	$R_{th\ j\text{-}a}$	150	K/W
From junction to case	$R_{th\ j\text{-}c}$	75	K/W

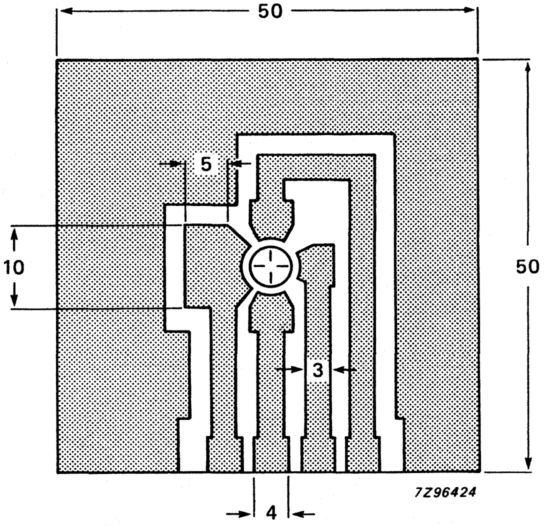

Fig. 2 Requirements for fibre-glass print (dimensions in mm). Single-sided 35 μm Cu-clad epoxy fibre-glass print, thickness 1,5 mm. Tracks are fully tin-lead plated. Shaded area is Cu.

CHARACTERISTICS

T_j = 25 °C unless otherwise specified

Collector cut-off current $I_E = 0$; $-V_{CB} = 10$ V	$-I_{CBO}$	max.	100	nA
D.C. current gain $-I_C = 50$ mA; $-V_{CE} = 10$ V	h_{FE}	min.	20	
Transition frequency at f = 500 MHz $-I_C = 50$ mA; $-V_{CE} = 10$ V	f_T	typ.	4,5	GHz
Noise figure at optimum source impedance and $-I_C = 50$ mA; $-V_{CE} = 10$ V; f = 800 MHz; T_{amb} = 25 °C	F	typ.	4,3	dB

Collector capacitance at f = 1 MHz			
$I_E = i_e = 0; -V_{CB} = 10$ V	C_c	typ.	2,0 pF
Emitter capacitance at f = 1 MHz			
$I_C = i_c = 0; -V_{EB} = 0,5$ V	C_e	typ.	5,0 pF
Feedback capacitance at f = 1 MHz			
$I_C = 0; -V_{CE} = 10$ V	C_{re}	typ.	1,4 pF
Maximum unilateral power gain (s_{re} assumed to be zero)			
$G_{UM} = 10 \log \frac{\lvert s_{fe}\rvert^2}{[1-\lvert s_{ie}\rvert^2][1-\lvert s_{oe}\rvert^2]}$			
$-I_C = 50$ mA; $-V_{CE} = 10$ V; f = 800 MHz ; $T_{amb} = 25$ °C	G_{UM}	typ.	13,5 dB
$-I_C = 50$ mA; $-V_{CE} = 10$ V; f = 2 GHz ; $T_{amb} = 25$ °C		typ.	6,0 dB
Output voltage at $d_{im} = -60$ dB			
$-I_C = 70$ mA; $-V_{CE} = 10$ V;			
$R_L = 75\ \Omega$; $T_{amb} = 25$ °C			
$V_p = V_o$ at $d_{im} = -60$ dB ; $f_p = 795,25$ MHz			
$V_q = V_o -6$ dB ; $f_q = 803,25$ MHz			
$V_r = V_o -6$ dB ; $f_r = 805,25$ MHz			
measured at $f_{(p+q-r)} = 793,25$ MHz	V_o	typ.	500 mV
Second harmonic distortion (see Fig. 3)			
$-I_C = 70$ mA; $-V_{CE} = 10$ V; $R_L = 75\ \Omega$;			
VSWR < 2; $T_{amb} = 25$ °C			
$V_p = V_o = 150$ mV at $f_p = 250$ MHz			
$V_q = V_o = 150$ mV at $f_q = 560$ MHz			
measured at $f_{(p+q)} = 810$ MHz	d_2	typ.	−50 dB

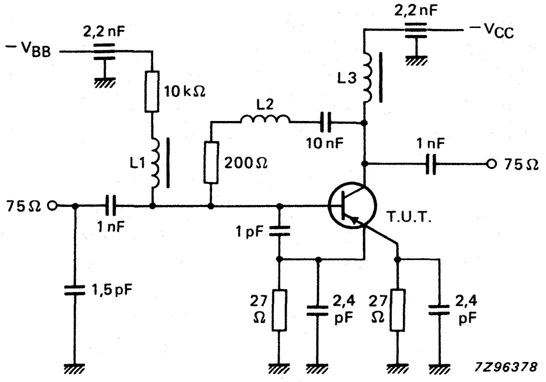

Fig. 3 Intermodulation distortion and second harmonic distortion test circuit.

L1 = L3 = 5 μH micro-choke
L2 = 1,5 turns Cu wire (0,4 mm), internal diameter 3 mm, winding pitch 1 mm

→ **s-parameters** (common emitter) at $-V_{CE}$ = 10 V, T_{amb} = 25 °C; typical values.

I_C mA	f MHz	s_{ie}	s_{fe}	s_{re}	s_{oe}	G_{UM} dB
5	40	0,75/ −42,7°	13,8/159,7°	0,03/ 70,9°	0,93/ −20,1°	35,4
	100	0,74/ −90,7°	10,8/133,3°	0,06/ 49,2°	0,74/ −41,9°	27,5
	200	0,75/−128,8°	7,0/112,1°	0,08/ 33,6°	0,52/ −59,2°	21,8
	500	0,74/−167,7°	3,0/ 83,6°	0,09/ 25,1°	0,32/ −79,5°	13,4
	800	0,74/−178,7°	2,0/ 69,0°	0,10/ 26,8°	0,37/ −89,3°	10,1
	1000	0,74/−172,2°	1,6/ 59,3°	0,11/ 27,7°	0,41/ −99,6°	8,4
	2000	0,76/+139,8°	0,8/ 33,3°	0,14/ 47,5°	0,40/−139,1°	2,6
10	40	0,61/ −63,4°	22,1/153,0°	0,03/ 65,7°	0,88/ −30,7°	35,3
	100	0,67/−115,6°	15,2/124,9°	0,05/ 44,3°	0,62/ −61,2°	28,4
	200	0,73/−146,7°	9,0/106,0°	0,06/ 34,0°	0,41/ −85,1°	23,1
	500	0,74/−176,1°	3,8/ 83,3°	0,07/ 36,2°	0,25/−117,2°	15,3
	800	0,73/+173,2°	2,5/ 70,5°	0,09/ 40,5°	0,28/−119,4°	11,5
	1000	0,73/+168,5°	2,0/ 62,1°	0,10/ 41,8°	0,33/−126,0°	9,6
	2000	0,75/+137,4°	1,0/ 38,2°	0,16/ 53,3°	0,31/−159,4°	4,1
20	40	0,50/ −93,5°	30,5/146,0°	0,02/ 60,6°	0,81/ −43,2°	35,5
	100	0,66/−138,4°	18,7/118,4°	0,03/ 42,7°	0,53/ −82,0°	29,4
	200	0,72/−160,8°	10,5/101,8°	0,04/ 38,9°	0,38/−111,9°	24,3
	500	0,74/+178,5°	4,3/ 83,3°	0,06/ 48,9°	0,28/−148,3°	16,5
	800	0,73/+168,9°	2,8/ 71,6°	0,08/ 52,5°	0,30/−147,7°	12,6
	1000	0,73/+165,2°	2,2/ 63,3°	0,09/ 52,3°	0,54/−150,6°	10,7
	2000	0,75/+135,5°	1,2/ 42,2°	0,17/ 57,5°	0,30/ 176,9°	5,3
30	40	0,48/−111,8°	34,6/142,5°	0,02/ 58,6°	0,76/ −50,3°	35,7
	100	0,67/−148,2°	20,1/115,3°	0,03/ 43,8°	0,50/ −93,2°	29,9
	200	0,73/−166,2°	11,0/ 99,9°	0,03/ 43,7°	0,38/−124,1°	24,8
	500	0,74/+175,8°	4,5/ 83,2°	0,05/ 55,4°	0,32/−158,2°	17,0
	800	0,73/+168,4°	2,1/ 72,1°	0,08/ 57,7°	0,32/−157,9°	13,0
	1000	0,73/+164,3°	2,3/ 64,2°	0,09/ 56,6°	0,35/−159,8°	11,2
	2000	0,75/+134,8°	1,2/ 44,0°	0,17/ 59,2°	0,32/ 167,5°	5,8
50	40	0,49/−131,2°	38,8/139,8°	0,01/ 57,1°	0,70/ −58,7°	35,9
	100	0,69/−157,6°	21,1/112,6°	0,02/ 46,5°	0,48/−104,7°	30,3
	200	0,73/−171,3°	11,5/ 98,3°	0,03/ 49,5°	0,39/−134,9°	25,2
	500	0,75/+174,1°	4,6/ 82,4°	0,05/ 61,6°	0,35/−165,6°	17,4
	800	0,73/+166,8°	3,0/ 71,5°	0,08/ 62,0°	0,34/−165,3°	13,5
	1000	0,73/+162,7°	2,4/ 64,1°	0,09/ 59,9°	0,37/−166,8°	11,4
	2000	0,76/+134,0°	1,2/ 45,3°	0,18/ 60,9°	0,34/ 160,9°	6,0

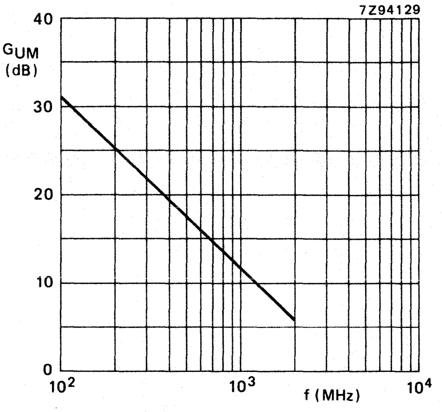

Fig. 4 $-V_{CE} = 10$ V; $-I_C = 50$ mA; $T_{amb} = 25$ °C; typical values.

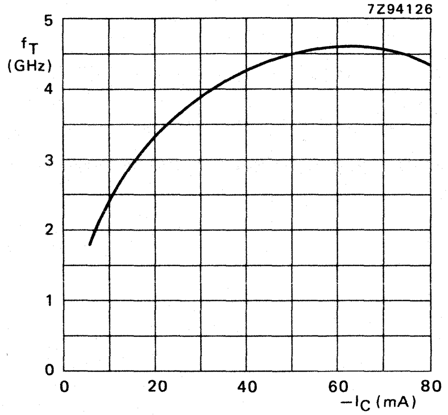

Fig. 5 $-V_{CE} = 10$ V; f = 500 MHz; $T_j = 25$ °C; typical values.

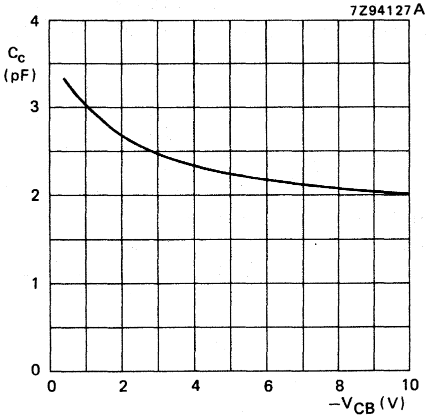

Fig. 6 $I_E = i_e = 0$; f = 1 MHz; $T_j = 25$ °C; typical values.

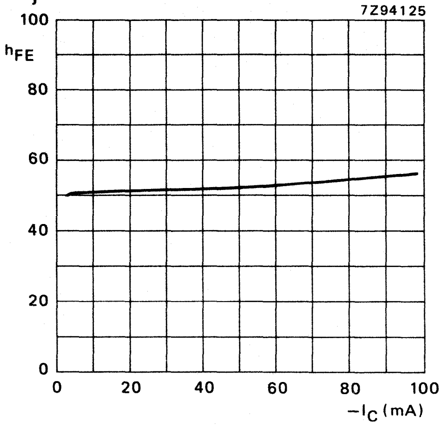

Fig. 7 $-V_{CE} = 10$ V; $T_j = 25$ °C; typical values.

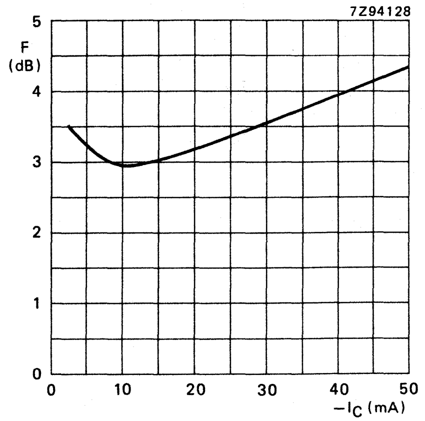

Fig. 8 $-V_{CE} = 10$ V; f = 800 MHz; Z_S = opt.; $T_{amb} = 25$ °C; typical values.

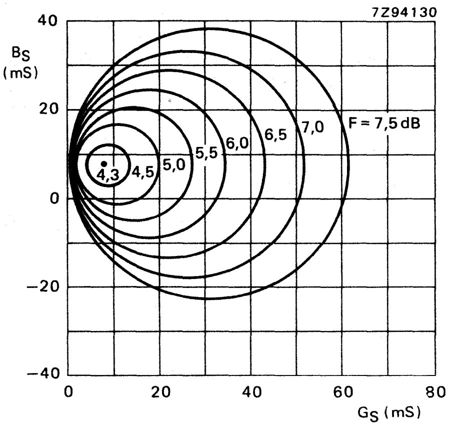

Fig. 9 Circles of constant noise figure; $-V_{CE} = 10$ V; $-I_C = 50$ mA; f = 800 MHz; $T_{amb} = 25$ °C; typical values.

N-P-N 1 GHz WIDEBAND TRANSISTOR

N-P-N transistor in a four-lead dual-emitter plastic envelope (SOT-103). This device is designed for wideband application in CATV and MATV amplifier systems and features high output voltage capabilities.

QUICK REFERENCE DATA

Collector-base voltage (open emitter)	V_{CBO}	max.	25	V
Collector-emitter voltage (open base)	V_{CEO}	max.	18	V
Collector current (d.c.)	I_C	max.	150	mA
Total power dissipation up to T_{amb} = 45 °C	P_{tot}	max.	1	W
Junction temperature	T_j	max.	175	°C
D.C. current gain I_C = 100 mA; V_{CE} = 10 V	h_{FE}	min.	25	
Transition frequency at f = 500 MHz I_C = 100 mA; V_{CE} = 10 V	f_T	typ.	3,7	GHz
Noise figure at optimum source impedance I_C = 20 mA; V_{CE} = 10 V; f = 800 MHz	F	typ.	2,3	dB
Output power at 1 dB gain compression V_{CE} = 10 V; I_C = 90 mA; f = 800 MHz	P_{L1}	typ.	+22	dBm
Third order intercept point V_{CE} = 10 V; I_C = 90 mA; f = 800 MHz	ITO	typ.	+41	dBm

MECHANICAL DATA

Dimensions in mm

Fig. 1 SOT-103.

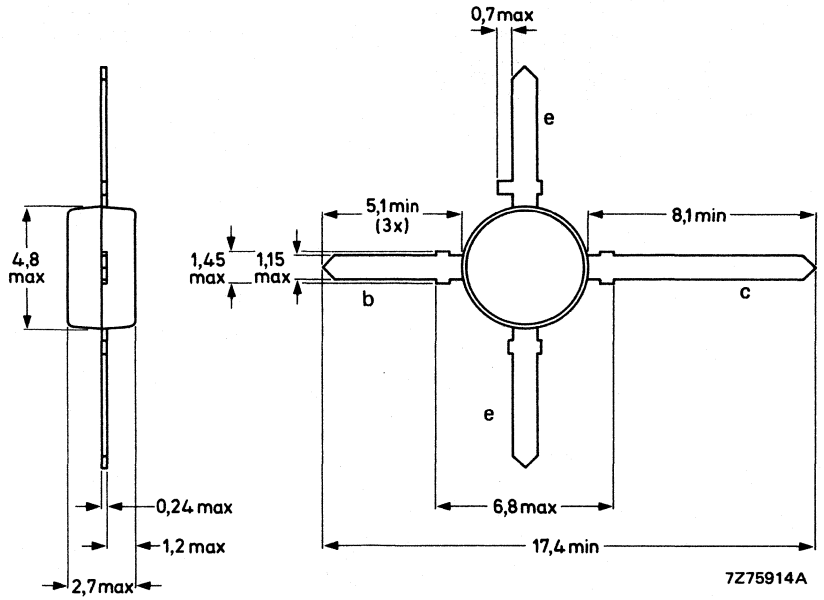

RATINGS

Limiting values in accordance with the Absolute Maximum System (IEC 134)

Collector-base voltage (open emitter)	V_{CBO}	max.	25	V
Collector-emitter voltage (open base)	V_{CEO}	max.	18	V
Emitter-base voltage (open collector)	V_{EBO}	max.	2	V
Collector current (d.c.)	I_C	max.	150	mA
Total power dissipation up to T_{amb} = 45 °C mounted on a fibre-glass p.c.b. (see Fig. 2)	P_{tot}	max.	1	W
Storage temperature	T_{stg}		−65 to +175	°C
Junction temperature	T_j	max.	175	°C

THERMAL RESISTANCE

From junction to ambient mounted on a glass-fibre p.c.b. (see Fig. 2)	$R_{th\ j\text{-}a}$	=	130	K/W
From junction to case	$R_{th\ j\text{-}c}$	=	50	K/W

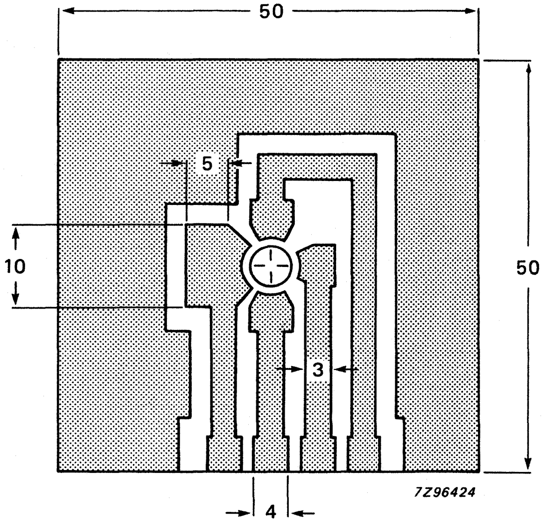

Fig. 2 Requirements for fibre-glass print (dimensions in mm). Single-sided 35 μm Cu-clad epoxy fibre-glass print, thickness 1,5 mm. Tracks are fully tin-lead plated. Shaded area is Cu.

CHARACTERISTICS

T_j = 25 °C unless otherwise specified

Collector cut-off current $I_E = 0$; $V_{CB} = 15$ V	I_{CBO}	max.	100	μA
D.C. current gain $I_C = 100$ mA; $V_{CE} = 10$ V	h_{FE}	min.	25	
Transition frequency at f = 500 MHz $I_C = 100$ mA; $V_{CE} = 10$ V	f_T	typ.	3,7	GHz
Collector output capacitance at f = 1 MHz $I_E = i_e = 0$; $V_{CB} = 10$ V	C_c	typ.	2,3	pF
Emitter capacitance at f = 1 MHz $I_C = i_e = 0$; $V_{EB} = 0{,}5$ V	C_e	typ.	10	pF
Feedback capacitance at f = 1 MHz $I_E = 0$; $V_{CE} = 10$ V	C_{re}	typ.	1,2	pF

Maximum unilateral power gain (s_{re} assumed to be zero)

$$G_{UM} = 10 \log \frac{|s_{fe}|^2}{[1-|s_{ie}|^2]\,[1-|s_{oe}|^2]}$$

$I_C = 100$ mA; $V_{CE} = 10$ V; f = 800 MHz; $T_{amb} = 25$ °C	G_{UM}	typ.	14,5 dB
$I_C = 100$ mA; $V_{CE} = 10$ V; f = 2 GHz; $T_{amb} = 25$ °C		typ.	7,0 dB
Noise figure at optimum source impedance $I_C = 20$ mA; $V_{CE} = 10$ V; f = 800 MHz; $T_{amb} = 25$ °C	F	typ.	2,3 dB
Output power at 1 dB gain compression $V_{CE} = 10$ V; $I_C = 90$ mA; f = 800 MHz; $T_{amb} = 25$ °C	P_{L1}	typ.	+22 dBm
$V_{CE} = 10$ V; $I_C = 100$ mA; f = 300 MHz; $T_{amb} = 25$ °C		typ.	+24 dBm
Third order intercept point $V_{CE} = 10$ V; $I_C = 90$ mA; f = 800 MHz; $T_{amb} = 25$ °C	ITO	typ.	+41 dBm
$V_{CE} = 10$ V; $I_C = 100$ mA; f = 300 MHz; $T_{amb} = 25$ °C		typ.	+43 dBm
Output voltage at $d_{im} = -60$ dB $I_C = 500$ mA; $V_{CE} = 15$ V; $R_L = 75\ \Omega$; $T_{amb} = 25$ °C $V_p = V_o$ at $d_{im} = -60$ dB, $f_p = 795{,}25$ MHz $V_q = V_o - 6$ dB at $f_q = 803{,}25$ MHz $V_r = V_o - 6$ dB at $f_r = 805{,}25$ MHz measured at $f_{(p+q-r)} = 793{,}25$ MHz	V_o	typ.	750 mV
Second harmonic distortion (see Fig. 3) $I_C = 100$ mA; $V_{CE} = 10$ V; $R_L = 75\ \Omega$; VSWR < 2; $T_{amb} = 25$ °C $V_p = V_o = 316$ mV at $f_p = 250$ MHz $V_q = V_o = 316$ mV at $f_q = 560$ MHz measured at $f_{(p+q)} = 810$ MHz	d_2	typ.	−55 dB

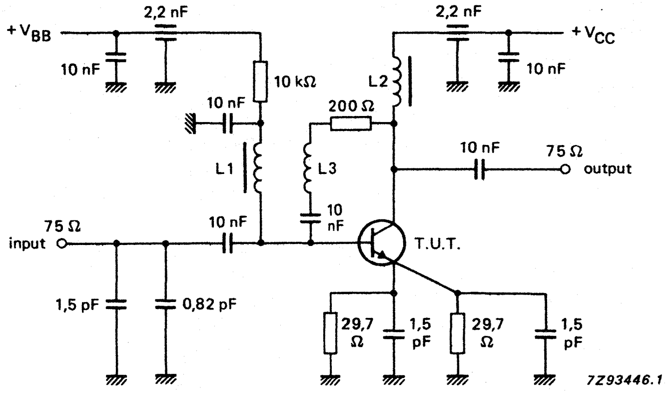

Fig. 3 Intermodulation distortion and second harmonic distortion test circuit.

L1 = L2 = 5 μH Ferroxcube choke

L3 = 2 turns Cu wire (0,5 mm), internal diameter 4 mm, winding pitch 2 mm

s-parameters (common emitter) at V_{CE} = 10 V; T_{amb} = 25 °C; typical values.

I_C mA	f MHz	s_{ie}	s_{fe}	s_{re}	s_{oe}	G_{UM} dB
5	40	0,91/ −40,7°	13,5/156,6°	0,03/ 69,3°	0,95/ −16,4°	40,1
	100	0,95/ −87,6°	10,3/131,2°	0,05/ 46,6°	0,77/ −32,1°	29,6
	200	0,85/−126,7°	6,6/109,7°	0,07/ 30,2°	0,59/ −42,3°	22,9
	500	0,78/−167,3°	2,8/ 79,9°	0,07/ 20,9°	0,45/ −58,1°	14,1
	800	0,78/+177,2°	1,8/ 64,7°	0,07/ 27,3°	0,51/ −73,6°	10,7
	1000	0,78/+169,7°	1,5/ 54,6°	0,07/ 33,5°	0,56/ −86,6°	9,1
	1200	0,82/+162,2°	1,1/ 48,7°	0,07/ 45,7°	0,52/−101,5°	7,4
	2000	0,82/+140,5°	0,7/ 27,6°	0,12/ 71,3°	0,42/−138,0°	2,2
10	40	0,85/ −48,2°	20,9/154,7°	0,03/ 66,3°	0,92/ −23,3°	40,2
	100	0,80/ −98,7°	14,8/126,7°	0,05/ 43,6°	0,68/ −45,0°	30,6
	200	0,78/−135,7°	4,0/106,9°	0,06/ 30,4°	0,47/ −58,5°	24,1
	500	0,76/−171,8°	3,8/ 81,8°	0,06/ 28,6°	0,30/ −74,9°	15,7
	800	0,76/+175,0°	2,5/ 68,5°	0,07/ 36,9°	0,36/ −85,8°	12,2
	1000	0,76/+168,4°	2,0/ 58,8°	0,07/ 41,3°	0,41/ −97,4°	10,4
	1200	0,79/+161,2°	1,6/ 53,9°	0,08/ 51,0°	0,38/−111,8°	8,8
	2000	0,80/+140,6°	1,0/ 30,6°	0,14/ 66,8°	0,36/−142,8°	4,6
20	40	0,81/ −56,5°	28,5/151,5°	0,02/ 63,0°	0,89/ −31,3°	40,6
	100	0,76/−108,9°	19,0/122,8°	0,04/ 41,7°	0,60/ −59,9°	31,4
	200	0,75/−143,2°	11,2/104,7°	0,05/ 31,7°	0,39/ −80,3°	25,3
	500	0,74/−175,9°	4,7/ 82,7°	0,06/ 36,2°	0,23/−107,6°	17,0
	800	0,73/+172,5°	3,0/ 70,7°	0,07/ 44,3°	0,27/−110,2°	13,2
	1000	0,74/+166,8°	2,4/ 62,2°	0,08/ 47,6°	0,31/−118,3°	11,5
	1200	0,78/+159,0°	1,9/ 58,9°	0,09/ 55,1°	0,29/−133,5°	10,2
	2000	0,77/+140,3°	1,2/ 35,4°	0,14/ 63,7°	0,28/−155,5°	6,1
30	40	0,79/ −61,1°	32,7/149,4°	0,02/ 61,8°	0,87/ −35,7°	40,7
	100	0,75/−113,4°	21,1/121,0°	0,04/ 40,7°	0,58/ −68,2°	31,8
	200	0,74/−146,2°	12,1/104,0°	0,05/ 32,5°	0,38/ −92,8°	25,8
	500	0,73/−177,0°	5,0/ 83,7°	0,06/ 39,5°	0,23/−127,4°	17,6
	800	0,73/+172,0°	3,3/ 72,0°	0,07/ 47,2°	0,25/−126,8°	13,9
	1000	0,73/+166,9°	2,6/ 63,9°	0,08/ 49,8°	0,29/−132,4°	12,1
	1200	0,77/+158,6°	2,1/ 61,1°	0,09/ 56,7°	0,28/−147,9°	10,8
	2000	0,76/+140,0°	1,4/ 38,3°	0,15/ 62,3°	0,24/−165,7°	6,6
50	40	0,78/ −64,6°	36,7/147,3°	0,02/ 60,0°	0,86/ −40,3°	41,0
	100	0,73/−118,1°	22,9/119,4°	0,04/ 39,7°	0,56/ −76,5°	32,2
	200	0,73/−148,9°	13,0/102,6°	0,04/ 33,2°	0,37/−104,5°	26,3
	500	0,73/−178,1°	5,3/ 94,3°	0,06/ 42,6°	0,25/−142,7°	18,1
	800	0,72/+170,5°	3,5/ 73,1°	0,07/ 49,4°	0,25/−142,0°	14,3
	1000	0,72/+165,2°	2,7/ 64,8°	0,08/ 51,5°	0,30/−145,6°	12,3
	1200	0,76/+157,5°	2,3/ 63,0°	0,09/ 58,0°	0,29/−161,1°	11,2
	2000	0,75/+139,9°	1,4/ 40,5°	0,15/ 60,8°	0,24/−177,2°	7,0

s-parameters (common emitter) at V_{CE} = 10 V; T_{amb} = 25 °C; typical values.

I_C mA	f MHz	s_{ie}	s_{fe}	s_{re}	s_{oe}	G_{UM} dB
75	40	0,78/ −67,3°	38,4/146,4°	0,02/ 59,1°	0,84/ −42,8°	41,1
	100	0,74/−112,0°	23,5/118,2°	0,04/ 39,3°	0,55/ −81,1°	32,4
	200	0,73/−151,1°	13,3/102,3°	0,04/ 33,9°	0,37/−110,4°	26,4
	500	0,72/−178,4°	5,5/ 84,4°	0,06/ 43,8°	0,27/−149,1°	18,3
	800	0,72/ +170,2°	3,5/ 73,1°	0,07/ 50,3°	0,27/−148,8°	14,4
	1000	0,72/ +164,6°	2,8/ 65,6°	0,09/ 52,1°	0,30/−151,7°	12,4
	1200	0,76/ +157,8°	2,3/ 63,8°	0,09/ 58,3°	0,30/−166,8°	11,3
	2000	0,75/ +139,5°	1,5/ 41,7°	0,16/ 59,7°	0,24/ +175,2°	7,2
100	40	0,78/ −68,3°	38,9/145,2°	0,02/ 58,2°	0,83/ −44,4°	41,0
	100	0,74/−121,6°	23,5/117,2°	0,04/ 38,8°	0,54/ −83,1°	23,3
	200	0,73/−151,6°	13,1/101,3°	0,04/ 33,7°	0,37/−112,7°	26,4
	500	0,73/−179,4°	5,4/ 83,8°	0,06/ 44,3°	0,27/−151,3°	18,2
	800	0,73/ +170,6°	3,5/ 73,4°	0,07/ 50,6°	0,27/−150,9°	14,5
	1000	0,72/ +165,3°	2,8/ 65,4°	0,09/ 52,2°	0,30/−153,4°	12,4
	1200	0,77/ +157,3°	2,3/ 64,1°	0,09/ 58,3°	0,30/−168,6°	11,3
	2000	0,75/ +139,4°	1,5/ 41,9°	0,15/ 59,7°	0,24/ +175,2°	7,0

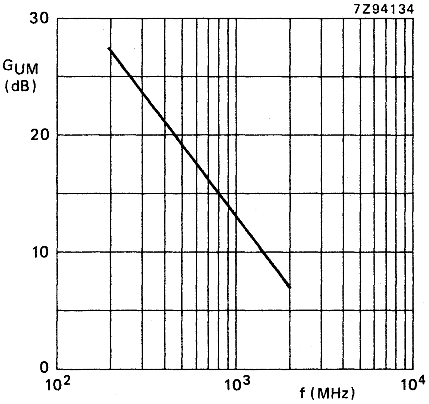

Fig. 4 V_{CE} = 10 V; I_C = 100 mA; T_{amb} = 25 °C; typical values.

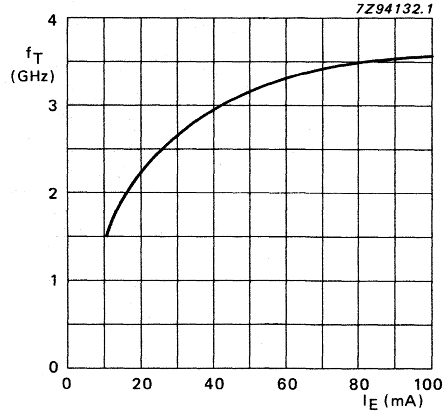

Fig. 5 V_{CE} = 10 V; f = 500 MHz; T_j = 25 °C; typical values.

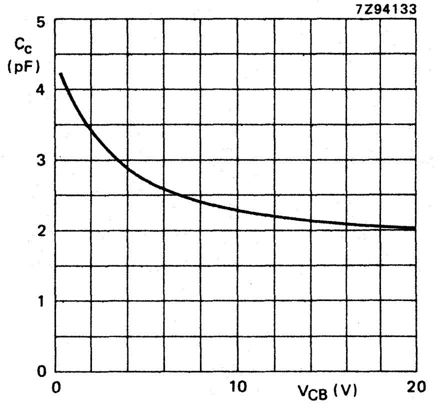

Fig. 6 $I_E = i_e = 0$; f = 1 MHz; $T_j = 25\ ^oC$; typical values.

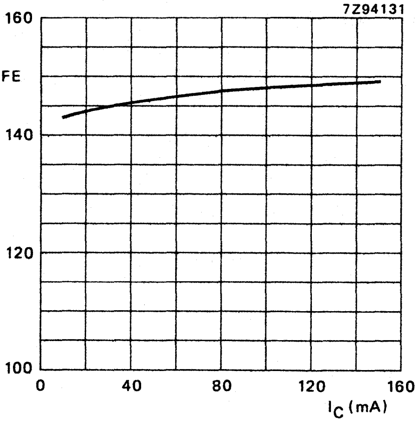

Fig. 7 $V_{CE} = 10$ V; $T_j = 25\ ^oC$; typical values.

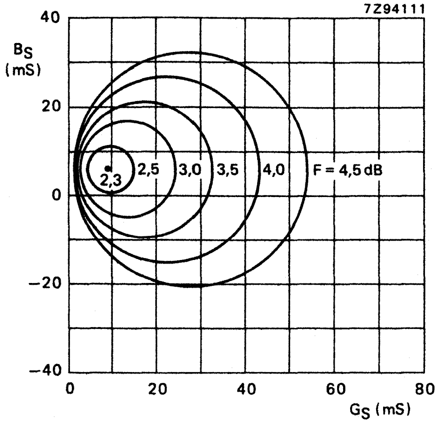

Fig. 8 Circles of constant noise figure; $V_{CE} = 10$ V; $I_C = 20$ mA; f = 800 MHz; $T_{amb} = 25\ ^oC$; typical values.

P-N-P 2 GHz WIDEBAND TRANSISTOR

P-N-P transistor in a four-lead dual emitter plastic envelope (SOT-103). This device is designed for application in wideband amplifiers, such as in CATV and MATV systems, up to 2 GHz.

N-P-N complement is BFG90A.

QUICK REFERENCE DATA

Collector-base voltage (open emitter)	$-V_{CBO}$	max.	20	V
Collector-emitter voltage (open base)	$-V_{CEO}$	max.	15	V
Collector current (d.c.)	$-I_C$	max.	25	mA
Total power dissipation up to T_{amb} = 60 °C	P_{tot}	max.	180	mW
Junction temperature	T_j	max.	150	°C
D.C. current gain $-I_C$ = 14 mA; $-V_{CE}$ = 10 V	h_{FE}	min.	20	
Transition frequency at f = 500 MHz $-I_C$ = 14 mA; $-V_{CE}$ = 10 V	f_T	typ.	5	GHz
Feedback capacitance at f = 1 MHz I_C = 0; $-V_{CE}$ = 10 V	C_{re}	typ.	0,45	pF
Noise figure at optimum source impedance $-I_C$ = 14 mA; $-V_{CE}$ = 10 V; f = 800 MHz	F	typ.	3,4	dB

MECHANICAL DATA

Dimensions in mm

Fig. 1 SOT-103.

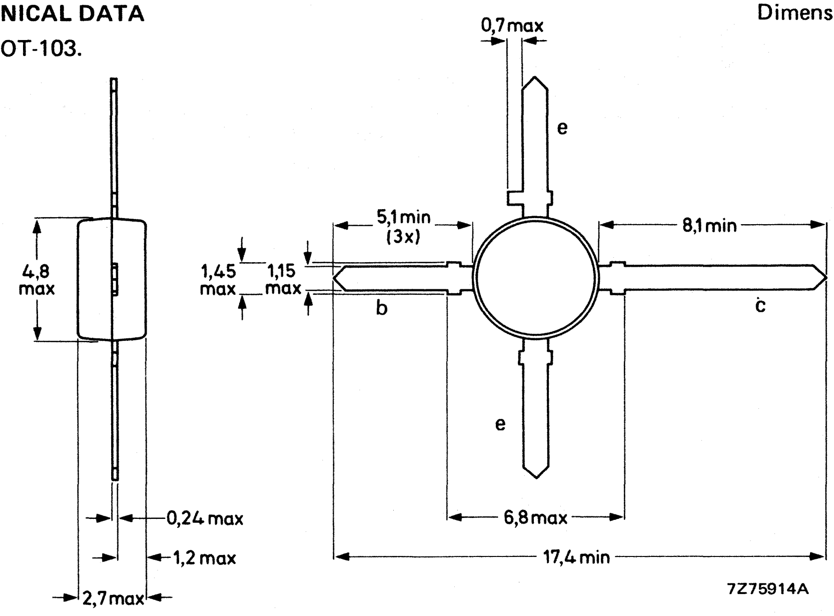

RATINGS

Limiting values in accordance with the Absolute Maximum System (IEC 134)

Collector-base voltage (open emitter)	$-V_{CBO}$	max.	20 V
Collector-emitter voltage (open base)	$-V_{CEO}$	max.	15 V
Emitter-base voltage (open collector)	$-V_{EBO}$	max.	2 V
Collector current			
d.c.	$-I_C$	max.	25 mA
peak value; f > 1 MHz	$-I_{CM}$	max.	35 mA
Total power dissipation up to $T_{amb} = 60\ ^oC$	P_{tot}	max.	180 mW
Storage temperature	T_{stg}		−65 to +150 ^oC
Junction temperature	T_j	max.	150 ^oC

THERMAL RESISTANCE

From junction to ambient (free air) mounted on a fibre-glass print (see Fig. 2)	$R_{th\ j\text{-}a}$	500 K/W

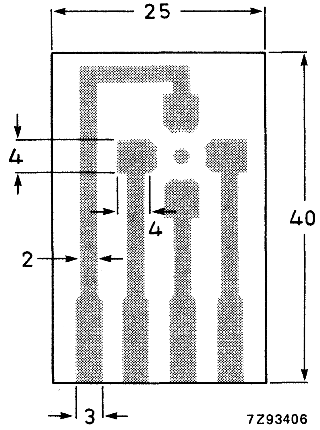

Fig. 2 Requirements for fibre-glass print (dimensions in mm). Single-sided 35 μm Cu-clad epoxy fibre-glass print, thickness 1,5 mm. Tracks are fully tin-lead plated. Shaded area is Cu.

→ CHARACTERISTICS

$T_j = 25\ ^oC$ unless otherwise specified

Collector cut-off current $I_E = 0; -V_{CB} = 10$ V	$-I_{CBO}$	max.	50 nA
D.C. current gain $-I_C = 14$ mA; $-V_{CE} = 10$ V	h_{FE}	min.	20
Transition frequency at f = 500 MHz $-I_C = 14$ mA; $-V_{CE} = 10$ V	f_T	typ.	5,0 GHz
Noise figure at optimum source impedance and $-V_{CE} = 10$ V; f = 800 MHz; $T_{amb} = 25\ ^oC$			
at $-I_C = 4$ mA	F	typ.	2,4 dB
at $-I_C = 14$ mA		typ.	3,4 dB

Collector capacitance at f = 1 MHz $I_E = i_e = 0; -V_{CB} = 10$ V	C_c	typ.	0,9 pF
Emitter capacitance at f = 1 MHz $I_C = i_c = 0; -V_{EB} = 0{,}5$ V	C_e	typ.	1,1 pF
Feedback capacitance at f = 1 MHz $I_C = 0; -V_{CE} = 10$ V	C_{re}	typ.	0,45 pF
Maximum unilateral power gain (s_{re} assumed to be zero) $G_{UM} = 10 \log \frac{\lvert s_{fe}\rvert^2}{[1-\lvert s_{ie}\rvert^2]\,[1-\lvert s_{oe}\rvert^2]}$ $-I_C = 14$ mA; $-V_{CE} = 10$ V; f = 800 MHz; $T_{amb} = 25$ °C	G_{UM}	typ.	16,5 dB
$-I_C = 14$ mA; $-V_{CE} = 10$ V; f = 2 GHz; $T_{amb} = 25$ °C		typ.	8,5 dB
Output voltage at $d_{im} = -60$ dB $-I_C = 14$ mA; $-V_{CE} = 10$ V; $R_L = 75\ \Omega$; $T_{amb} = 25$ °C $V_p = V_o$ at $d_{im} = -60$ dB ; $f_p = 795{,}25$ MHz $V_q = V_o - 6$ dB ; $f_q = 803{,}25$ MHz $V_r = V_o - 6$ dB ; $f_r = 805{,}25$ MHz measured at $f_{(p+q+r)} = 793{,}25$ MHz	V_o	typ.	150 mV
Seconds harmonic distortion (see Fig. 3) $-I_C = 14$ mA; $-V_{CE} = 10$ V; $R_L = 75\ \Omega$; VSWR < 2; $T_{amb} = 25$ °C $V_p = V_o = 150$ mV at $f_p = 250$ MHz $V_q = V_o = 150$ mV at $f_q = 560$ MHz measured at $f_{(p+q)} = 810$ MHz	d_2	typ.	−50 dB

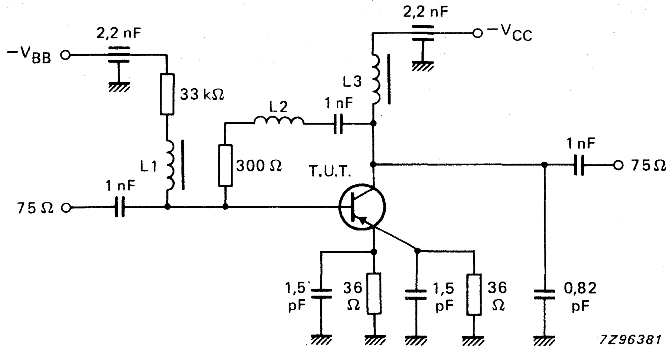

Fig. 3 Intermodulation distortion and second harmonic distortion MATV test circuit.

L1 = L3 = 5 μH micro-choke

L2 = 3 turns Cu wire (0,4 mm), internal diameter 3 mm, winding pitch 1 mm

s-parameters (common emitter) at $-V_{CE}$ = 10 V; T_{amb} = 25 °C; typical values.

$-I_C$ mA	f MHz	s_{ie}	s_{fe}	s_{re}	s_{oe}	G_{UM} dB
5	40	0,66/ 67,4°	13,1/132,5°	0,04/ 48,9°	0,98/+81,6°	38,4
	100	0,65/ 41,0°	12,3/131,7°	0,04/ 63,7°	0,96/+49,7°	35,6
	200	0,63/ −25,4°	10,4/136,5°	0,05/ 64,1°	0,82/+ 2,7°	27,5
	500	0,50/ −61,8°	6,5/105,8°	0,08/ 44,8°	0,58/−19,6°	19,3
	800	0,48/−173,2°	4,7/ 87,7°	0,10/ 46,9°	0,49/−29,3°	15,9
	1000	0,46/−170,1°	3,7/ 81,1°	0,10/ 44,7°	0,43/−33,1°	13,4
	1200	0,47/+178,4°	3,0/ 77,4°	0,11/ 44,8°	0,38/−46,5°	11,3
	1500	0,54/+169,8°	2,8/ 57,0°	0,13/ 51,1°	0,34/−48,1°	11,1
	2000	0,46/+144,6°	2,0/ 22,4°	0,15/ 4,0°	0,31/−89,8°	7,4
10	40	0,44/+ 60,2°	19,4/137,8°	0,04/ 34,2°	0,96/+79,6°	37,9
	100	0,45/+ 24,4°	17,8/129,8°	0,04/ 58,6°	0,91/+43,5°	33,6
	200	0,47/ −49,4°	14,3/127,2°	0,05/ 57,9°	0,73/ −4,7°	27,5
	500	0,46/ 92,9°	7,7/ 97,6°	0,07/ 48,4°	0,46/−25,9°	19,7
	800	0,47/−176,4°	5,4/ 82,6°	0,09/ 53,8°	0,38/−30,9°	16,4
	1000	0,48/−179,6°	4,2/ 77,1°	0,09/ 52,5°	0,33/−35,6°	14,0
	1200	0,48/+167,7°	3,3/ 75,6°	0,10/ 53,5°	0,29/−45,9°	11,9
	1500	0,53/+159,7°	3,3/ 57,5°	0,12/ 58,7°	0,27/−48,7°	12,0
	2000	0,48/+137,2°	2,2/ −3,9°	0,15/ 11,3°	0,24/−91,2°	8,1
14	40	0,34/+ 53,8°	22,3/136,9°	0,04/ 34,1°	0,95/+78,2°	37,4
	100	0,37/+ 11,9°	19,9/131,0°	0,03/ 54,7°	0,88/+41,3°	33,1
	200	0,42/ −64,7°	15,9/123,1°	0,04/ 57,3°	0,69/ −8,5°	27,6
	500	0,46/−160,6°	7,9/ 96,8°	0,06/ 54,0°	0,40/−26,8°	19,7
	800	0,47/−174,4°	5,5/ 81,7°	0,08/ 56,7°	0,34/−32,1°	16,5
	1000	0,48/+175,9°	4,2/ 75,7°	0,08/ 54,9°	0,30/−37,0°	14,1
	1200	0,50/+164,4°	3,4/ 74,5°	0,09/ 56,4°	0,27/−44,1°	12,3
	1500	0,55/+158,1°	3,2/ 54,6°	0,11/ 62,4°	0,24/−45,1°	12,0
	2000	0,49/+134,9°	2,2/ −5,4°	0,14/ 13,4°	0,22/−90,9°	8,5

s-parameters (common emitter) at $-V_{CE} = 5$ V; $T_{amb} = 25$ °C; typical values.

$-I_C$ mA	f MHz	s_{ie}	s_{fe}	s_{re}	s_{oe}	G_{UM} dB
20	40	0,15/ +3,5°	21,7/136,8°	0,04/ 28,1°	0,91/ +75,5°	34,6
	100	0,31/ −46,9°	18,4/142,5°	0,04/ 64,9°	0,80/ +35,6°	30,2
	200	0,45/ −83,8°	14,2/120,9°	0,04/ 56,5°	0,59/ −15,5°	25,8
	500	0,55/−175,0°	6,6/ 94,1°	0,06/ 52,3°	0,32/ −34,4°	18,4
	800	0,58/ +177,2°	4,6/ 79,2°	0,08/ 58,4°	0,27/ −36,0°	15,4
	1000	0,57/ +170,3°	3,5/ 73,8°	0,08/ 58,1°	0,24/ −41,3°	12,9
	1200	0,59/ +159,5°	2,8/ 72,9°	0,09/ 59,3°	0,21/ −47,7°	11,1
	1500	0,54/ +150,9°	2,2/ 56,0°	0,11/ 67,6°	0,18/ −36,0°	8,3
	2000	0,58/ +132,1°	1,9/ −6,2°	0,14/ 16,0°	0,19/−108,6°	7,4
25	40	0,15/ −27,1°	22,0/138,1°	0,04/ 34,0°	0,90/ +75,4°	34,0
	100	0,32/ −61,0°	18,7/131,1°	0,03/ 64,9°	0,78/ +34,3°	30,1
	200	0,45/ −80,4°	14,1/119,5°	0,04/ 54,0°	0,56/ −15,9°	25,6
	500	0,57/−179,4°	6,4/ 92,4°	0,06/ 53,9°	0,31/ −34,4°	18,3
	800	0,57/ +174,6°	4,5/ 78,9°	0,08/ 59,2°	0,26/ −35,4°	15,1
	1000	0,59/ +167,5°	3,4/ 73,1°	0,08/ 58,3°	0,23/ −40,1°	12,8
	1200	0,61/ +157,3°	2,8/ 71,8°	0,08/ 61,8°	0,21/ −48,5°	11,1
	1500	0,56/ +151,1°	2,2/ 75,3°	0,10/ 68,9°	0,18/ −24,3°	8,4
	2000	0,60/ +131,8°	1,8/ −6,7°	0,14/ 17,6°	0,19/ −96,0°	7,4
30	40	0,19/ −46,2°	21,9/138,3°	0,04/ 28,3°	0,88/ +74,7°	33,3
	100	0,34/ −73,1°	18,2/129,2°	0,03/ 63,7°	0,77/ +30,6°	29,6
	200	0,47/ −67,1°	13,9/118,9°	0,04/ 56,8°	0,55/ −16,8°	25,5
	500	0,58/−176,6°	6,2/ 92,5°	0,05/ 56,9°	0,29/ −30,8°	18,1
	800	0,59/ +167,6°	4,3/ 77,7°	0,08/ 60,3°	0,26/ −35,6°	14,9
	1000	0,60/ +167,4°	3,3/ 72,7°	0,08/ 59,9°	0,23/ −37,6°	12,6
	1200	0,63/ +157,3°	2,7/ 70,8°	0,09/ 63,1°	0,21/ −45,9°	10,9
	1500	0,57/ +156,7°	2,2/ 49,2°	0,11/ 70,6°	0,19/ −45,4°	8,6
	2000	0,63/ +130,5°	1,8/ −8,2°	0,14/ 19,2°	0,20/ −95,7°	7,5

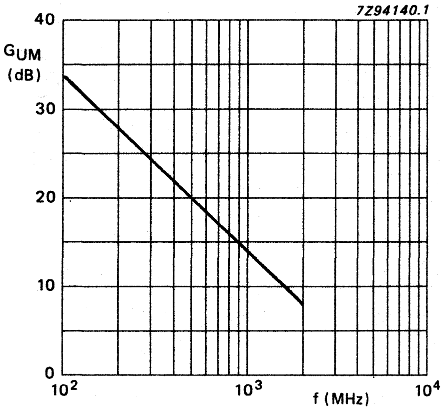

Fig. 4 $-V_{CE}$ = 10 V; $-I_C$ = 14 mA; T_{amb} = 25 °C; typical values.

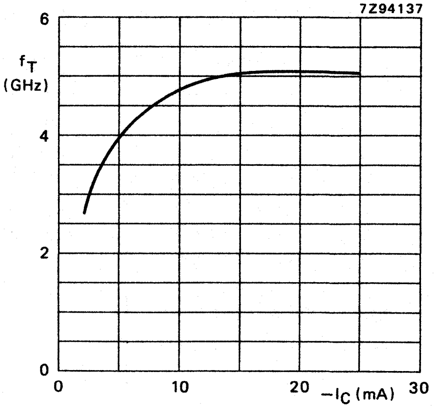

Fig. 5 $-V_{CE}$ = 10 V; f = 500 MHz; T_j = 25 °C; typical values.

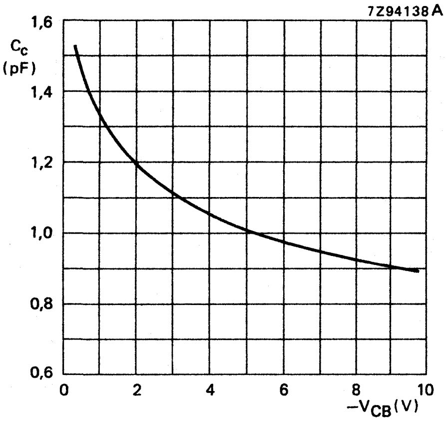

Fig. 6 $I_E = i_e = 0$; f = 1 MHz; T_j = 25 °C; typical values.

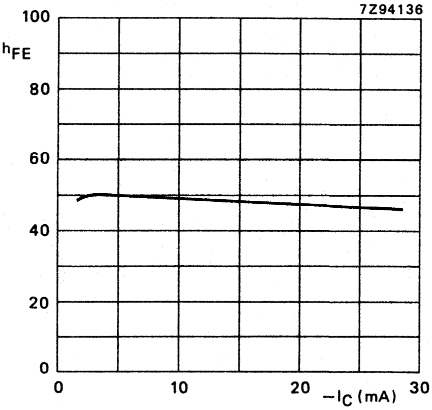

Fig. 7 $-V_{CE}$ = 10 V; T_j = 25 °C; typical values.

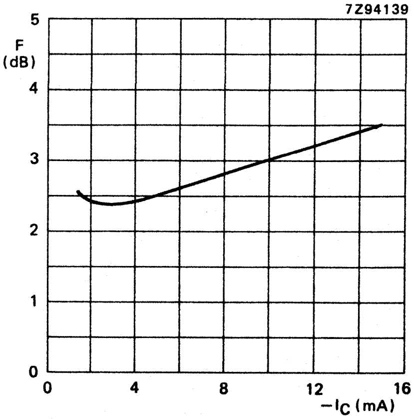

Fig. 8 $-V_{CE}$ = 10 V; f = 800 MHz; Z_S = opt.; T_{amb} = 25 °C.

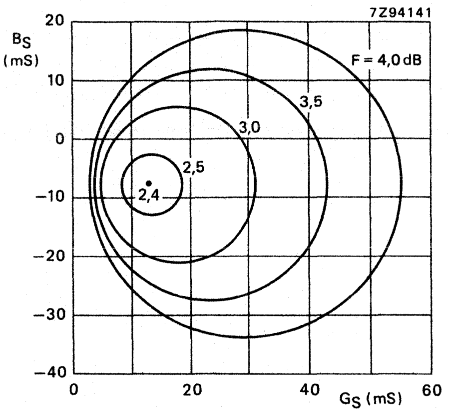

Fig. 9 Circles of constant noise figure; $-V_{CE}$ = 10 V; $-I_C$ = 4 mA; f = 800 MHz; typical values.

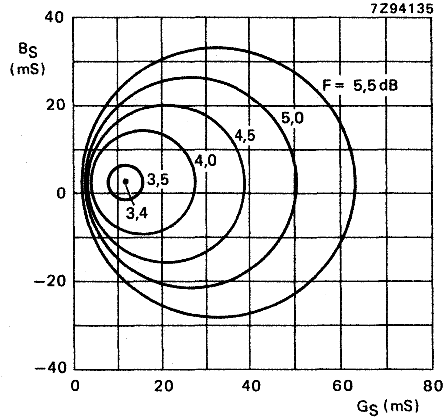

Fig. 10 Circles of constant noise figure; $-V_{CE}$ = 10 V; $-I_C$ = 14 mA; f = 800 MHz; typical values.

N-P-N 2 GHz WIDEBAND TRANSISTOR

N-P-N transistor in a four-lead dual-emitter plastic envelope (SOT-103). It is designed for wideband application in the GHz range, such as satellite TV systems (SATV) and repeater amplifiers in fibre-optical systems. The device features a very high transition frequency, high gain and a very low noise figure up to high frequencies.

QUICK REFERENCE DATA

Collector-base voltage (open emitter)	V_{CBO}	max.	20	V
Collector-emitter voltage (open base)	V_{CEO}	max.	10	V
Collector current (d.c.)	I_C	max.	50	mA
Total power dissipation up to T_{amb} = 60 °C	P_{tot}	max.	300	mW
Junction temperature	T_j	max.	150	°C
D.C. current gain I_C = 15 mA; V_{CE} = 5 V	h_{FE}	min.	60	
Transition frequency at f = 500 MHz I_C = 15 mA; V_{CE} = 8 V	f_T	typ.	7,5	GHz
Noise figure at Z_S = 60 Ω; I_C = 15 mA; V_{CE} = 8 V; f = 2 GHz	F	typ.	3,0	dB
Maximum unilateral power gain at f = 2 GHz I_C = 15 mA; V_{CE} = 8 V	G_{UM}	typ.	10,5	dB

MECHANICAL DATA

Dimensions in mm

Fig. 1 SOT-103.

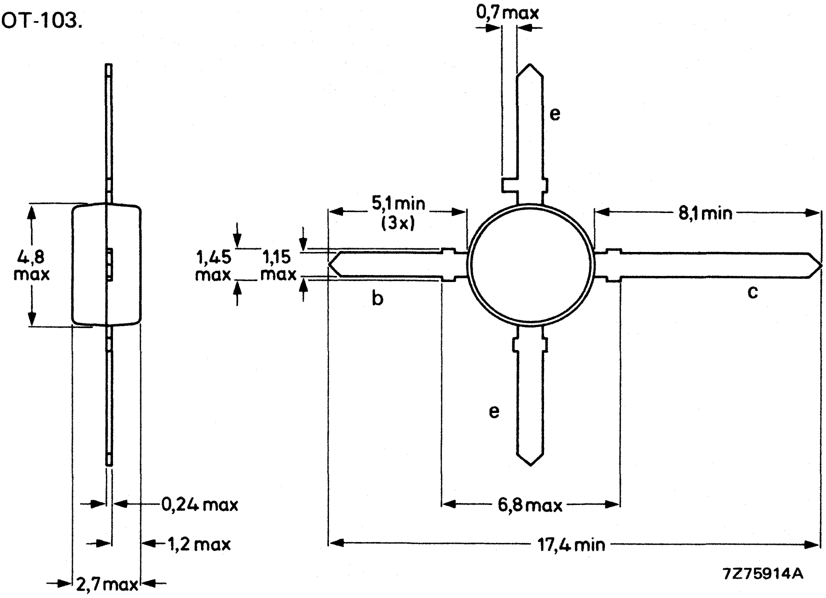

RATINGS

Limiting values in accordance with the Absolute Maximum System (IEC 134)

Collector-base voltage (open emitter)	V_{CBO}	max.	20	V
Collector-emitter voltage (open base)	V_{CEO}	max.	10	V
Emitter-base voltage (open collector)	V_{EBO}	max.	2,5	V
Collector current (d.c.)	I_C	max.	50	mA
Total power dissipation up to T_{amb} = 60 °C mounted on a fibre-glass p.c.b. (see Fig. 2)	P_{tot}	max.	300	mW
Storage temperature	T_{stg}		−65 to +150	°C
Junction temperature	T_j	max.	150	°C

THERMAL RESISTANCE

From junction to ambient (free air) mounted on a glass-fibre p.c.b. (see Fig. 2)	$R_{th\ j\text{-}a}$	=	300	K/W

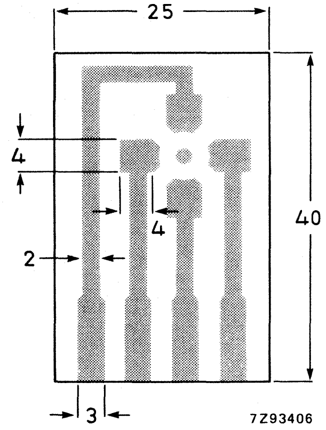

Fig. 2 Requirements for fibre-glass print (dimensions in mm). Single-sided 35 μm Cu-clad epoxy fibre-glass print, thickness 1,5 mm. Tracks are fully tin-lead plated. Shaded area is Cu.

CHARACTERISTICS

T_j = 25 °C unless otherwise specified

Collector cut-off current $I_E = 0$; $V_{CB} = 5$ V	I_{CBO}	max.	50	nA
D.C. current gain $I_C = 15$ mA; $V_{CE} = 5$ V	h_{FE}	min. typ.	60 100	
Transition frequency at f = 500 MHz $I_C = 15$ mA; $V_{CE} = 8$ V	f_T	typ.	7,5	GHz
Collector capacitance at f = 1 MHz $I_E = i_e = 0$; $V_{CB} = 8$ V	C_c	typ.	1,1	pF
Emitter capacitance at f = 1 MHz $I_C = i_c = 0$; $V_{EB} = 0,5$ V	C_e	typ.	1,3	pF
Feedback capacitance at f = 1 MHz $I_E = 0$; $V_{CE} = 8$ V	C_{re}	typ.	0,5	pF

Maximum unilateral power gain (s_{re} assumed to be zero)

$$G_{UM} = 10 \log \frac{|s_{fe}|^2}{[1-|s_{ie}|^2]\,[s_{oe}|^2]}$$

$I_C = 15$ mA; $V_{CE} = 8$ V; f = 800 MHz; T_{amb} 25 °C	G_{UM}	typ.	18,5 dB
$I_C = 15$ mA; $V_{CE} = 8$ V; f = 2 GHz; $T_{amb} = 25$ °C		typ.	10,5 dB

Noise figure at optimum source impedance and $V_{CE} = 8$ V; f = 800 MHz; $T_{amb} = 25$ °C;

$I_C = 5$ mA	F	typ.	0,8 dB
$I_C = 15$ mA		typ.	1,5 dB

Noise figure at $Z_S = 60\ \Omega$ and $V_{CE} = 8$ V; f = 2 GHz; $T_{amb} = 25$ °C;

$I_C = 5$ mA	F	typ.	2,5 dB
$I_C = 15$ mA		typ.	3,0 dB

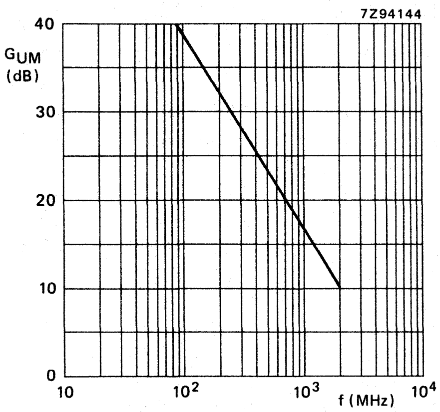

Fig. 3 $V_{CE} = 8$ V; $I_C = 15$ mA; $T_{amb} = 25$ °C; typical values.

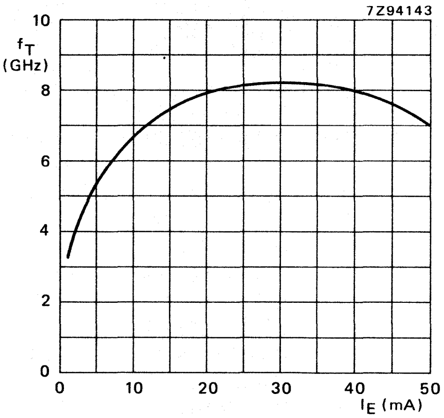

Fig. 4 $V_{CE} = 8$ V; f = 500 MHz; typical values.

s-parameters (common emitter) at V_{CE} = 8 V; T_{amb} = 25 °C; typical values

I_C mA	f MHz	s_{ie}	s_{fe}	s_{re}	s_{oe}	G_{UM} dB
5	40	0,86/ −11,0°	15,0/173,8°	0,01/ 85,5°	0,98/ −5,7°	42,8
	100	0,85/ −31,0°	14,6/159,5°	0,02/ 72,7°	0,96/−16,8°	40,4
	200	0,74/ −58,3°	12,4/143,0°	0,04/ 62,0°	0,81/−29,4°	30,0
	500	0,62/−114,9°	8,0/109,7°	0,07/ 44,1°	0,57/−51,2°	21,8
	800	0,54/−141,0°	5,5/ 94,8°	0,08/ 43,7°	0,46/−59,3°	17,3
	1000	0,52/−155,9°	4,5/ 85,5°	0,08/ 42,9°	0,43/−61,7°	15,3
	1200	0,50/−170,7°	3,7/ 78,8°	0,09/ 44,8°	0,39/−64,9°	13,3
	1500	0,51/+179,4°	3,1/ 72,3°	0,10/ 49,7°	0,34/−72,3°	11,7
	2000	0,50/+159,2°	2,3/ 60,6°	0,11/ 54,7°	0,33/−85,7°	9,1
10	40	0,75/ −17,4°	26,0/169,9°	0,01/ 78,7°	0,95/ −9,4°	42,4
	100	0,72/ −46,3°	24,0/151,2°	0,02/ 67,2°	0,89/−24,9°	37,6
	200	0,60/ −81,7°	18,0/131,8°	0,03/ 57,3°	0,68/−39,7°	30,0
	500	0,52/−138,7°	9,8/101,3°	0,05/ 48,9°	0,41/−59,2°	22,0
	800	0,48/−159,5°	6,5/ 89,3°	0,06/ 53,7°	0,34/−64,8°	17,9
	1000	0,48/−171,7°	5,2/ 81,5°	0,07/ 55,0°	0,31/−66,2°	16,0
	1200	0,48/+175,6°	4,2/ 76,4°	0,08/ 57,6°	0,27/−68,1°	14,1
	1500	0,48/+169,3°	4,0/ 70,5°	0,10/ 61,4°	0,25/−76,4°	12,5
	2000	0,48/+150,8°	2,7/ 60,2°	0,12/ 63,0°	0,25/−89,4°	10,0
15	40	0,66/ −22,8°	33,9/167,0°	0,01/ 77,8°	0,94/−12,0°	42,7
	100	0,62/ −58,5°	29,9/145,5°	0,02/ 64,3°	0,83/−30,2°	36,8
	200	0,53/ −97,7°	21,1/125,5°	0,03/ 56,4°	0,60/−45,0°	29,8
	500	0,50/−149,2°	10,4/ 97,8°	0,04/ 53,9°	0,34/−62,4°	22,2
	800	0,47/−167,8°	6,8/ 86,8°	0,06/ 59,6°	0,29/−66,8°	18,5
	1000	0,47/−178,4°	5,5/ 79,9°	0,07/ 60,8°	0,26/−68,1°	16,2
	1200	0,48/+169,9°	4,5/ 75,3°	0,08/ 62,7°	0,23/−69,5°	14,4
	1500	0,48/+165,1°	3,8/ 69,5°	0,10/ 65,7°	0,21/−78,5°	12,8
	2000	0,48/+147,3°	2,8/ 60,0°	0,12/ 66,1°	0,21/−91,5°	10,5
20	40	0,60/ −27,3°	39,4/164,9°	0,01/ 72,7°	0,92/−13,9°	42,1
	100	0,56/ −67,7°	33,1/141,8°	0,02/ 62,9°	0,79/−33,4°	36,2
	200	0,49/−108,4°	22,6/121,8°	0,03/ 56,3°	0,54/−47,9°	29,8
	500	0,49/−155,6°	10,7/ 95,9°	0,04/ 57,2°	0,31/−63,7°	22,2
	800	0,47/−172,1°	6,0/ 85,5°	0,06/ 63,0°	0,26/−67,5°	18,2
	1000	0,47/+178,1°	5,6/ 79,0°	0,07/ 63,6°	0,24/−68,6°	16,3
	1200	0,49/+167,1°	4,6/ 74,8°	0,08/ 65,8°	0,20/−69,9°	14,6
	1500	0,48/+162,9°	3,8/ 69,0°	0,10/ 68,0°	0,20/−79,3°	12,9
	2000	0,48/+145,5°	2,9/ 59,7°	0,13/ 67,7°	0,20/−92,6°	10,4
30	40	0,50/ −35,8°	46,8/161,7°	0,01/ 73,5°	0,90/−16,5°	41,7
	100	0,48/ −83,7°	37,2/136,5°	0,02/ 60,8°	0,72/−37,5°	35,7
	200	0,46/−124,2°	23,9/117,0°	0,02/ 57,6°	0,47/−50,6°	29,7
	500	0,49/−163,7°	10,7/ 93,5°	0,04/ 62,0°	0,27/−63,3°	22,1
	800	0,47/−177,5°	6,0/ 84,0°	0,06/ 67,1°	0,23/−66,4°	18,2
	1000	0,48/+173,9°	5,6/ 77,7°	0,07/ 67,4°	0,22/−67,3°	16,3
	1200	0,50/+163,8°	4,6/ 73,8°	0,08/ 69,1°	0,19/−68,4°	14,6
	1500	0,48/+160,3°	3,8/ 68,1°	0,10/ 70,6°	0,18/−79,1°	12,9
	2000	0,49/+143,4°	2,9/ 59,1°	0,13/ 69,5°	0,18/−92,6°	10,5

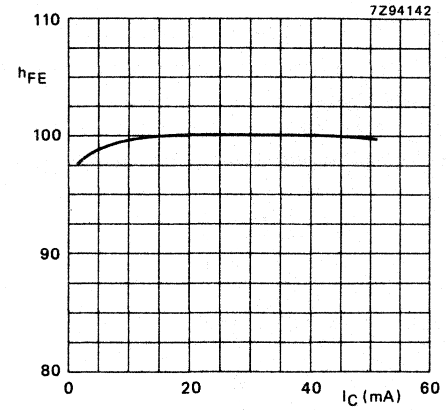

Fig. 5 V_{CE} = 5 V; T_j = 25 °C; typical values.

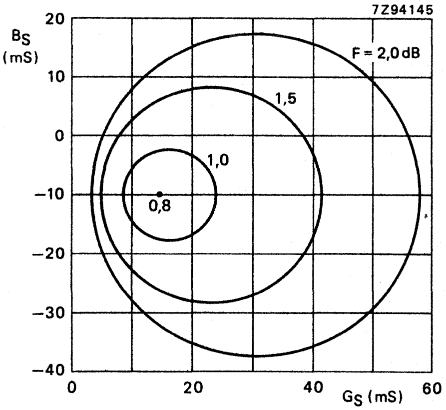

Fig. 6 Circles of constant noise figure; V_{CE} = 8 V; I_C = 5 mA; f = 800 MHz; T_{amb} = 25 °C; typical values.

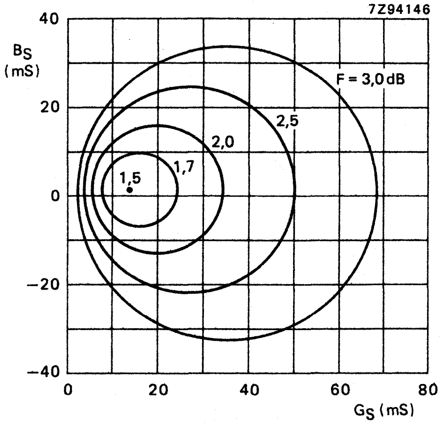

Fig. 7 Circles of constant noise figure; V_{CE} = 8 V; I_C = 15 mA; f = 800 MHz; T_{amb} = 25 °C; typical values.

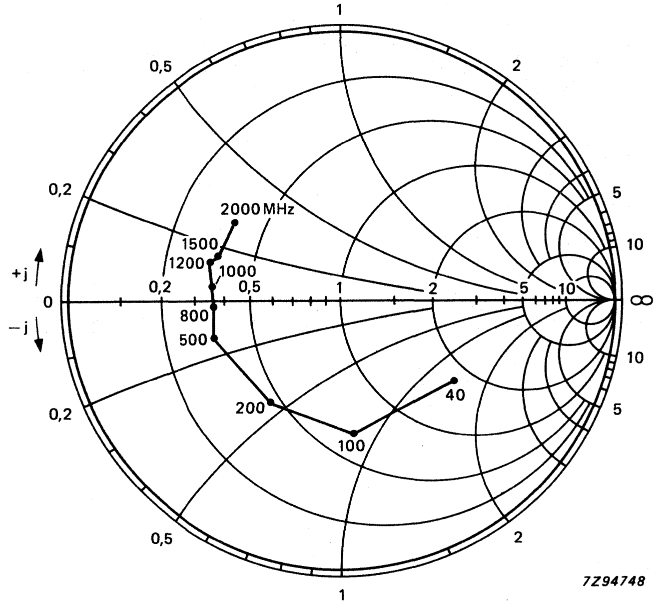

Fig. 8 Input impedance, derived from input reflection coefficient s_{ie} coordinates, in ohm x 50.

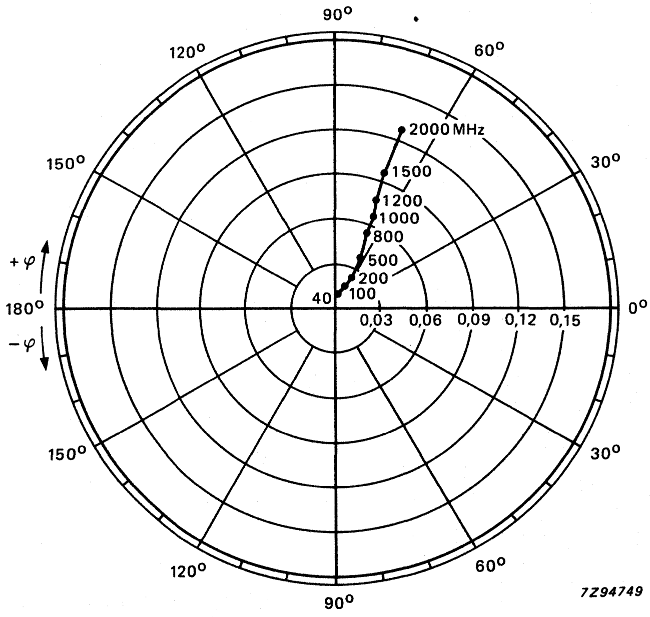

Fig. 9 Reverse transmission coefficient s_{re}.

Conditions for Figs 8, 9, 10 and 11: V_{CE} = 8 V; I_C = 30 mA; T_{amb} = 25 °C; typical values.

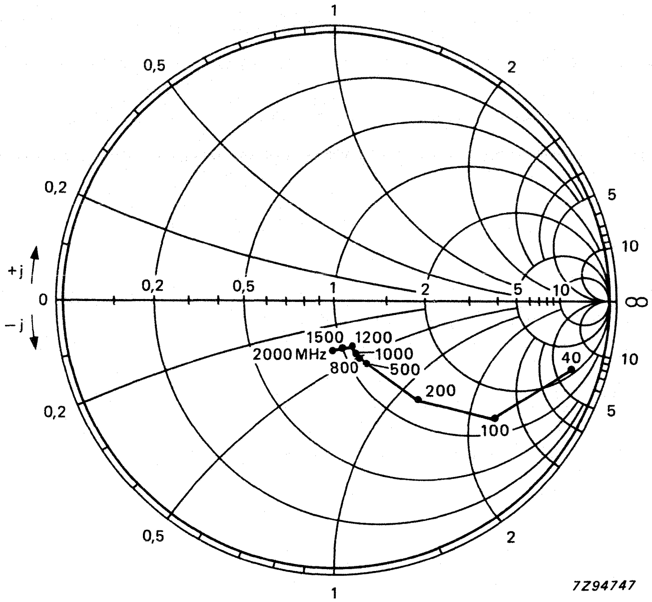

Fig. 10 Output impedance, derives from output reflection coefficient s_{oe} coordinates, in ohm x 50.

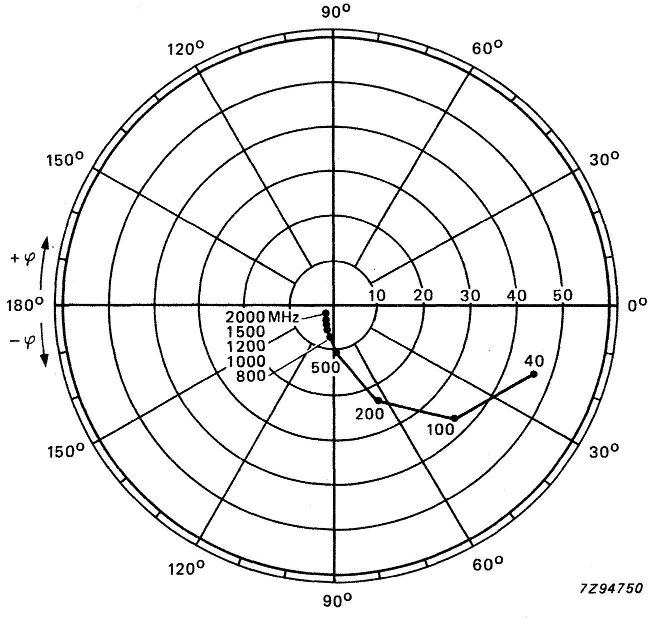

Fig. 11 Forward transmission coefficient s_{fe}.

N-P-N 2 GHz WIDEBAND TRANSISTOR

N-P-N transistor in a four-lead dual-emitter plastic envelope (SOT-143). It is designed for wideband application in the GHz range, such as satellite TV systems (SATV) and repeater amplifiers in fibre-optical systems. The device features a very high transition frequency, high gain and a very low noise figure up to high frequencies.

QUICK REFERENCE DATA

Collector-base voltage	V_{CBO}	max.	20 V
Collector-emitter voltage	V_{CEO}	max.	10 V
Collector current (d.c.)	I_C	max.	50 mA
Total power dissipation up to T_{amb} = 25 °C	P_{tot}	max.	300 mW
Junction temperature	T_j	max.	150 °C
D.C. current gain I_C = 15 mA; V_{CE} = 5 V	h_{FE}	min.	60
		typ.	100
Transition frequency at f = 500 MHz I_C = 15 mA; V_{CE} = 8 V	f_T	typ.	7,5 GHz
Maximum unilateral power gain at f = 2 GHz I_C = 15 mA; V_{CE} = 8 V; T_{amb} = 25 °C	G_{UM}	typ.	10,0 dB
Noise figure at f = 2 GHz Z_S = 60 Ω; T_{amb} = 25 °C			
I_C = 5 mA; V_{CE} = 8 V	F	typ.	2,5 dB
I_C = 15 mA; V_{CE} = 8 V	F	typ.	3,0 dB

MECHANICAL DATA

Dimensions in mm

Fig. 1 SOT-143.

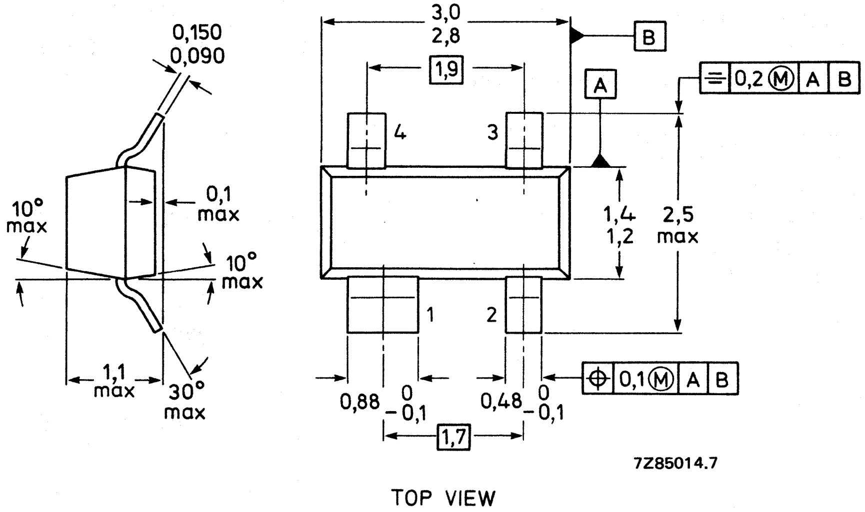

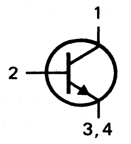

RATINGS

Limiting values in accordance with the Absolute Maximum System (IEC 134)

Collector-base voltage (open emitter)	V_{CBO}	max.	20	V
Collector-emitter voltage (open base)	V_{CEO}	max.	10	V
Emitter-base voltage (open collector)	V_{EBO}	max.	2,5	V
Collector current (d.c.)	I_C	max.	50	mA
Total power dissipation up to T_{amb} = 25 °C mounted on a ceramic substrate of 8 mm x 10 mm x 0,7 mm	P_{tot}	max.	300	mW
Storage temperature	T_{stg}	−65 to + 150		°C
Junction temperature	T_j	max.	150	°C

THERMAL RESISTANCE

From junction to ambient mounted on a ceramic substrate of 8 mm x 10 mm x 0,7 mm	$R_{th\ j\text{-}a}$	=	430	K/W

CHARACTERISTICS

T_j = 25 °C unless otherwise specified

Collector cut-off current $I_E = 0$; $V_{CB} = 10$ V	I_{CBO}	max.	50	nA
D.C. current gain $I_C = 15$ mA; $V_{CE} = 5$ V	h_{FE}	min. typ.	60 100	
Transition frequency at f = 500 MHz $I_C = 15$ mA; $V_{CE} = 8$ V	f_T	typ.	7,5	GHz
Collector capacitance at f = 1 MHz $I_E = I_e = 0$; $V_{CB} = 8$ V	C_c	typ.	0,7	pF
Emitter capacitance at f = 1 MHz $I_C = I_c = 0$; $V_{EB} = 0,5$ V	C_e	typ.	1,3	pF
Feedback capacitance at f = 1 MHz $I_C = 0$; $V_{CE} = 8$ V	C_{re}	typ.	0,5	pF

Maximum unilateral power gain (s_{re} assumed to be zero)

$$G_{UM} = 10 \log \frac{|s_{fe}|^2}{[1-|s_{ie}|^2]\,[1-|s_{oe}|^2]}$$

at $I_C = 15$ mA; $V_{CE} = 8$ V; f = 2 GHz; $T_{amb} = 25$ °C	G_{UM}	typ.	10,0	dB

Noise figures at f = 800 MHz; Z_S = opt.;
$T_{amb} = 25$ °C; $V_{CE} = 8$ V

$I_C = 5$ mA	F	typ.	0,8	dB
$I_C = 15$ mA	F	typ.	1,5	dB

Noise figures at f = 2 GHz; $Z_S = 60\ \Omega$
$T_{amb} = 25$ °C; $V_{CE} = 8$ V

$I_C = 5$ mA	F	typ.	2,5	dB
$I_C = 15$ mA	F	typ.	3,0	dB

s-parameters (common emitter) at V_{CE} = 8 V; T_{amb} = 25 °C; typical values.

I_C mA	f MHz	s_{ie}	s_{fe}	s_{re}	s_{oe}	G_{UM} dB
2	40	0,96/ −6,8°	5,8/177,8°	0,01/ 84,5°	0,99/ −3,2°	44,1
	100	0,98/ −20,8°	5,6/165,8°	0,03/ 77,5°	1,01/ −10,0°	46,5
	200	0,89/ −40,1°	5,1/153,2°	0,05/ 66,8°	0,91/ −19,0°	28,7
	500	0,81/ −89,3°	4,3/121,5°	0,09/ 43,4°	0,79/ −38,5°	21,5
	800	0,68/−123,0°	3,3/102,0°	0,11/ 33,8°	0,67/ −50,0°	15,7
	1000	0,64/−139,9°	2,8/ 89,8°	0,11/ 28,0°	0,65/ −54,5°	13,7
	1200	0,60/−157,3°	2,3/ 81,1°	0,11/ 25,8°	0,62/ −61,7°	11,5
	1500	0,59/−173,3°	2,0/ 71,8°	0,11/ 27,4°	0,55/ −69,3°	9,5
	2000	0,57/ +161,7°	1,5/ 56,3°	0,10/ 32,2°	0,54/ −85,8°	6,7
5	40	0,91/ −10,9°	13,5/174,8°	0,01/ 83,3°	0,98/ −5,9°	44,2
	100	0,91/ −30,3°	12,6/159,5°	0,03/ 72,2°	0,96/ −17,0°	40,9
	200	0,79/ −56,3°	10,6/143,5°	0,04/ 60,3°	0,81/ −29,5°	29,3
	500	0,64/−115,9°	7,4/109,8°	0,07/ 41,4°	0,58/ −50,8°	21,5
	800	0,55/−145,5°	5,2/ 93,5°	0,08/ 39,9°	0,48/ −59,5°	17,1
	1000	0,53/−161,4°	4,2/ 84,0°	0,08/ 39,1°	0,44/ −62,2°	15,0
	1200	0,52/−176,5°	3,5/ 77,8°	0,08/ 41,2°	0,42/ −67,1°	13,1
	1500	0,51/ +172,2°	2,9/ 69,1°	0,09/ 44,6°	0,38/ −75,7°	11,3
	2000	0,50/ +149,8°	2,2/ 56,7°	0,11/ 49,8°	0,38/ −89,5°	8,7
10	40	0,85/ −16,1°	23,5/170,6°	0,01/ 80,1°	0,96/ −9,7°	43,8
	100	0,81/ −42,6°	21,3/151,8°	0,02/ 67,2°	0,89/ −25,2°	38,0
	200	0,67/ −76,3°	16,6/133,0°	0,04/ 55,5°	0,68/ −40,0°	29,6
	500	0,54/−137,5°	9,5/101,5°	0,05/ 45,7°	0,42/ −60,2°	21,9
	800	0,49/−161,8°	6,3/ 88,5°	0,07/ 49,2°	0,35/ −67,0°	17,7
	1000	0,49/−175,2°	5,1/ 80,5°	0,07/ 50,6°	0,32/ −68,9°	15,8
	1200	0,49/ +171,5°	4,2/ 75,8°	0,08/ 53,4°	0,29/ −72,5°	13,9
	1500	0,47/ +163,5°	3,5/ 67,5°	0,09/ 55,3°	0,28/ −82,1°	12,3
	2000	0,47/ +142,5°	2,6/ 56,8°	0,12/ 57,7°	0,29/ −94,5°	9,6
15	40	0,80/ −20,1°	31,0/167,8°	0,01/ 76,4°	0,94/ −12,2°	43,5
	100	0,74/ −51,8°	26,9/146,8°	0,02/ 64,1°	0,83/ −30,3°	37,2
	200	0,60/ −89,4°	19,9/126,7°	0,03/ 54,0°	0,60/ −45,5°	29,8
	500	0,51/−147,5°	10,3/ 98,0°	0,05/ 49,7°	0,35/ −64,9°	22,1
	800	0,47/−168,5°	6,7/ 86,5°	0,06/ 54,6°	0,29/ −70,8°	18,1
	1000	0,47/ +179,2°	5,4/ 79,3°	0,07/ 55,9°	0,27/ −72,8°	16,1
	1200	0,48/ +166,5°	4,4/ 75,0°	0,08/ 58,4°	0,24/ −75,8°	14,3
	1500	0,46/ +160,0°	3,7/ 67,0°	0,10/ 59,2°	0,24/ −86,0°	12,5
	2000	0,45/ +139,5°	2,7/ 56,8°	0,12/ 60,2°	0,25/ −97,8°	10,0
20	40	0,76/ −23,8°	37,2/165,4°	0,01/ 75,6°	0,92/ −14,3°	43,3
	100	0,69/ −60,0°	31,2/142,6°	0,02/ 61,7°	0,78/ −34,3°	36,8
	200	0,55/ −99,6°	21,8/122,5°	0,03/ 53,6°	0,54/ −49,5°	29,8
	500	0,49/−152,5°	10,6/ 96,0°	0,04/ 53,0°	0,31/ −68,0°	22,2
	800	0,46/−172,9°	7,0/ 85,0°	0,06/ 58,1°	0,26/ −73,3°	18,2
	1000	0,46/ +175,9°	5,5/ 78,3°	0,07/ 59,3°	0,24/ −75,3°	16,1
	1200	0,47/ +163,5°	4,6/ 74,3°	0,08/ 61,5°	0,21/ −78,3°	14,5
	1500	0,45/ +157,9°	3,8/ 66,4°	0,10/ 61,4°	0,22/ −88,9°	12,8
	2000	0,45/ +137,8°	2,8/ 56,7°	0,12/ 61,7°	0,22/−100,2°	10,2

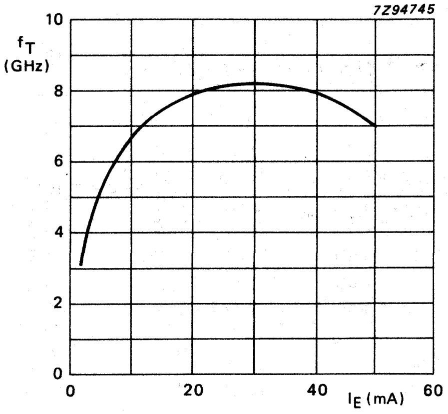

Fig. 2 V_{CE} = 8 V; f = 500 MHz; T_{amb} = 25 °C; typical values.

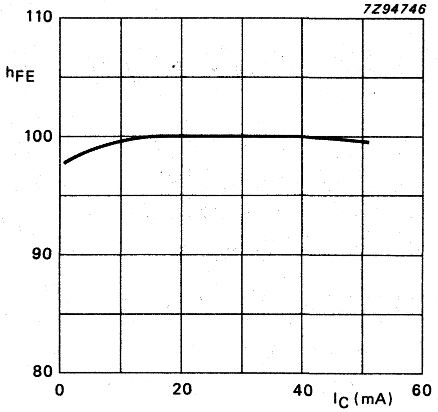

Fig. 3 V_{CE} = 5 V; T_{amb} = 25 °C; typical values.

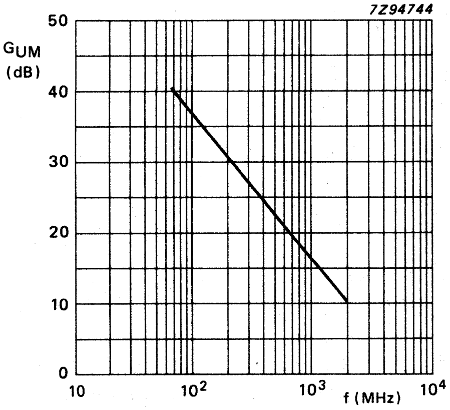

Fig. 4 V_{CE} = 8 V; I_C = 15 mA; T_{amb} = 25 °C; typical values.

N-P-N 2 GHz WIDEBAND TRANSISTOR ←

N-P-N transistor in a four-lead dual-emitter plastic envelope (SOT-103). This device is designed for application in wideband amplifiers, such as in CATV and MATV systems, up to 2 GHz.

P-N-P complement is BFG51.

QUICK REFERENCE DATA

Collector-base voltage (open emitter)	V_{CBO}	max.	20	V
Collector-emitter voltage (open base)	V_{CEO}	max.	15	V
Collector current (d.c.)	I_C	max.	25	mA
Total power dissipation up to T_{amb} = 60 °C	P_{tot}	max.	180	mW
Junction temperature	T_j	max.	150	°C
D.C. current gain I_C = 14 mA; V_{CE} = 10 V	h_{FE}	min.	40	
Transition frequency at f = 500 MHz I_C = 14 mA; V_{CE} = 10 V	f_T	typ.	5,0	GHz
Feedback capacitance at f = 1 MHz I_C = 0; V_{CE} = 10 V	C_{re}	typ.	0,35	pF
Noise figure at Z_S = opt.; T_{amb} = 25 °C; I_C = 14 mA; V_{CE} = 10 V; f = 800 MHz	F	typ.	2,4	dB
Maximum unilateral power gain at f = 800 MHz I_C = 14 mA; V_{CE} = 10 V	G_{UM}	typ.	19	dB
Output power at 1 dB gain compression V_{CE} = 10 V; I_C = 14 mA; f = 800 MHz	P_{L1}	typ.	+8	dBm
Third order intercept point V_{CE} = 10 V; I_C = 14 mA; f = 800 MHz	ITO	typ.	+27	dBm

MECHANICAL DATA

SOT-103 (see Fig. 1).

MECHANICAL DATA

Dimensions in mm

Fig. 1 SOT-103.

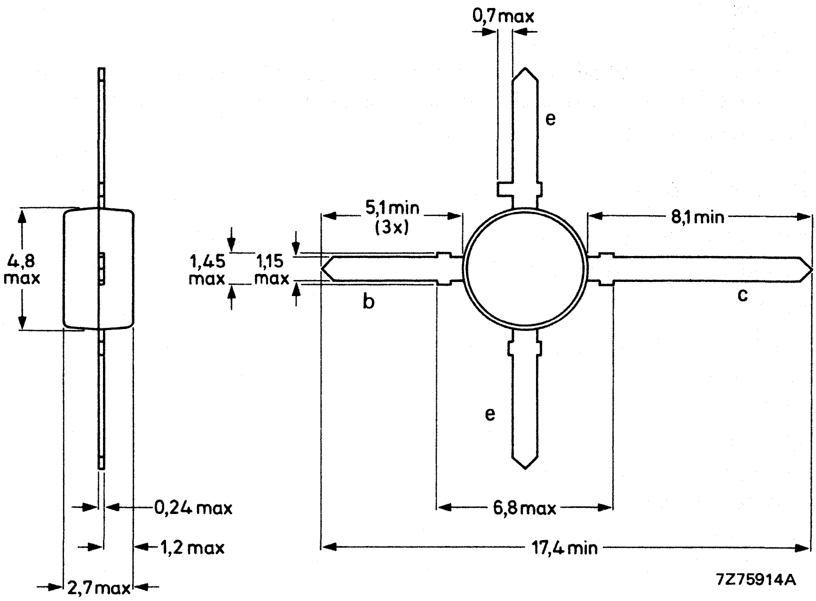

RATINGS

Limiting values in accordance with the Absolute Maximum System (IEC 134)

Collector-base voltage (open emitter)	V_{CBO}	max.	20	V
Collector-emitter voltage (open base)	V_{CEO}	max.	15	V
Emitter-base voltage (open collector)	V_{EBO}	max.	2	V
Collector current (d.c.)	I_C	max.	25	mA
Total power dissipation up to T_{amb} = 60 °C	P_{tot}	max.	180	mW
Storage temperature	T_{stg}		−65 to +150	°C
Junction temperature	T_j	max.	150	°C

THERMAL RESISTANCE

From junction to ambient in free air and mounted on glass-fibre p.c.b. (see Fig. 2)	$R_{th\ j\text{-}a}$	=	500 K/W

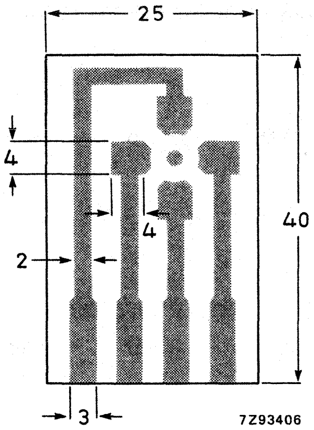

Fig. 2 Requirements for fibre-glass print (dimensions in mm). Single-sided 35 μm Cu-clad epoxy fibre-glass print, thickness 1,5 mm. Tracks are fully tin-lead plated. Shaded area is Cu.

CHARACTERISTICS

T_j = 25 °C unless otherwise specified

Collector cut-off current $I_E = 0$; $V_{CB} = 10$ V	I_{CBO}	max.	50 nA
D.C. current gain $I_C = 14$ mA; $V_{CE} = 10$ V	h_{FE}	min. typ.	40 90
Transition frequency at f = 500 MHz $I_C = 14$ mA; $V_{CE} = 10$ V	f_T	typ.	5,0 GHz
Collector capacitance at f = 1 MHz $I_E = i_e = 0$; $V_{CB} = 10$ V	C_c	typ.	0,7 pF
Emitter capacitance at f = 1 MHz $I_C = i_c = 0$; $V_{EB} = 0{,}5$ V	C_e	typ.	1,2 pF
Feedback capacitance at f = 1 MHz $I_C = 0$; $V_{CE} = 10$ V	C_{re}	typ.	0,35 pF

Maximum unilateral power gain (s_{re} assumed to be zero)

$$G_{UM} = 10 \log \frac{|s_{fe}|^2}{[1-|s_{ie}|^2]\,[1-|s_{oe}|^2]}$$

$I_C = 14$ mA; $V_{CE} = 10$ V; f = 800 MHz; $T_{amb} = 25$ °C	G_{UM}	typ.	19,0 dB
$I_C = 14$ mA; $V_{CE} = 10$ V; f = 2 GHz; $T_{amb} = 25$ °C		typ.	10,5 dB

Noise figure at $T_{amb} = 25$ °C

$I_C = 4$ mA; $V_{CE} = 10$ V; f = 800 MHz; Z_S = opt.	F	typ.	1,7 dB
$I_C = 14$ mA; $V_{CE} = 10$ V; f = 800 MHz; Z_S = opt.	F	typ.	2,4 dB
$I_C = 4$ mA; $V_{CE} = 10$ V; f = 2 GHz; $Z_S = 60\ \Omega$	F	typ.	3,6 dB

Output power at 1 dB gain compression $I_C = 14$ mA; $V_{CE} = 10$ V; $T_{amb} = 25$ °C; $R_L = 75\ \Omega$; measured at f = 800 MHz	P_{L1}	typ.	+8 dBm
Third order intercept point (see Fig. 3) $I_C = 14$ mA; $V_{CE} = 10$ V; $R_L = 75\ \Omega$; $T_{amb} = 25$ °C; P_p = ITO − 6 dB; f_p = 800 MHz; P_q = ITO − 6 dB; f_q = 801 MHz; measured at $f_{(2q-p)}$ = 802 MHz and at $f_{(2p-q)}$ = 799 MHz	ITO	typ.	+27 dBm
Output voltage at $d_{im} = -60$ dB $I_C = 14$ mA; $V_{CE} = 10$ V; $R_L = 75\ \Omega$; $T_{amb} = 25$ °C $V_p = V_o$ at $d_{im} = -60$ dB; f_p = 795,25 MHz $V_q = V_o - 6$ dB ; f_q = 803,25 MHz $V_r = V_o - 6$ dB ; f_r = 805,25 MHz measured at $f_{(p+q-r)}$ = 793,25 MHz	V_o	typ.	150 mV
Second harmonic distortion (see Fig. 3) $I_C = 14$ mA; $V_{CE} = 10$ V; $R_L = 75\ \Omega$; VSWR < 2; $T_{amb} = 25$ °C $V_p = V_o = 60$ mV at f_p = 250 MHz $V_q = V_o = 60$ mV at f_q = 560 MHz measured at $f_{(p+q)}$ = 810 MHz	d_2	typ.	−50 dB

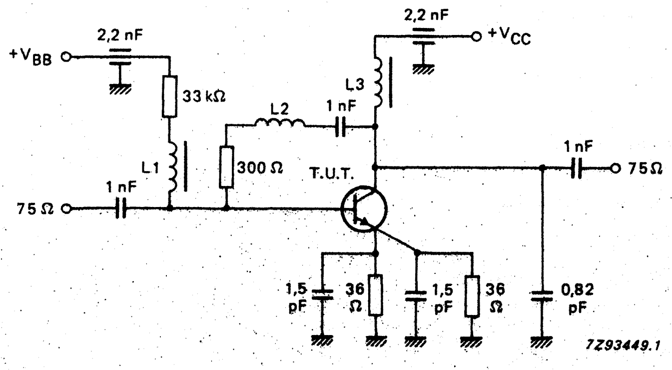

Fig. 3 Intermodulation distortion and second harmonic distortion MATV test circuit.

L1 = L3 = 5 μH Ferroxcube choke
L2 = 3 turns Cu wire (0,4 mm), internal diameter 3 mm, winding pitch 1 mm

s-parameters (common emitter) at V_{CE} = 10 V; T_{amb} = 25 °C; typical values ←

I_C mA	f MHz	s_{ie}	s_{fe}	s_{re}	s_{oe}	G_{UM} dB
5	40	0,85/ −10,3°	15,9/173,9°	0,01/ 79,5°	0,99/ −4,1°	45,9
	100	0,84/ −29,2°	15,5/160,1°	0,02/ 74,0°	0,98/−12,5°	42,6
	200	0,73/ −55,3°	13,2/143,8°	0,03/ 64,3°	0,85/−21,6°	31,3
	500	0,58/−109,4°	8,6/111,5°	0,05/ 48,9°	0,66/−34,9°	23,0
	800	0,49/−135,3°	5,9/ 97,2°	0,06/ 50,2°	0,58/−40,0°	18,4
	1000	0,47/−150,0°	4,9/ 88,2°	0,07/ 50,1°	0,56/−41,2°	16,5
	1200	0,45/−165,4°	4,0/ 81,3°	0,07/ 51,3°	0,54/−44,5°	14,5
	1500	0,44/−175,5°	3,3/ 76,0°	0,08/ 56,1°	0,47/−48,7°	12,5
	2000	0,43/+164,4°	2,5/ 64,4°	0,09/ 59,5°	0,46/−61,0°	9,7
10	40	0,75/ −15,6°	26,0/170,7°	0,01/ 76,9°	0,98/ −6,5°	45,4
	100	0,72/ −41,8°	24,3/152,8°	0,02/ 70,4°	0,98/−17,5°	39,7
	200	0,60/ −74,8°	18,8/133,8°	0,02/ 60,2°	0,76/−27,1°	31,1
	500	0,48/−130,9°	10,4/103,6°	0,04/ 53,2°	0,55/−36,3°	23,0
	800	0,43/−152,5°	6,9/ 91,8°	0,05/ 57,9°	0,48/−39,6°	18,8
	1000	0,43/−164,9°	5,6/ 84,2°	0,06/ 59,0°	0,48/−40,3°	16,9
	1200	0,43/−178,7°	4,6/ 78,5°	0,06/ 60,5°	0,46/−42,7°	15,1
	1500	0,42/+174,8°	3,8/ 73,8°	0,08/ 64,6°	0,41/−47,3°	13,1
	2000	0,41/+156,4°	2,8/ 63,5°	0,10/ 65,6°	0,40/−59,5°	10,5
14	40	0,69/ −19,1°	32,0/168,7°	0,01/ 75,0°	0,97/ −7,8°	45,6
	100	0,65/ −49,8°	28,8/148,5°	0,02/ 68,6°	0,90/−20,0°	38,8
	200	0,53/ −86,1°	21,1/128,8°	0,02/ 58,9°	0,70/−29,0°	30,8
	500	0,46/−136,5°	10,8/100,5°	0,04/ 56,5°	0,50/−35,7°	23,0
	800	0,42/−159,5°	7,1/ 89,5°	0,05/ 61,8°	0,45/−38,6°	19,0
	1000	0,42/−170,8°	5,8/ 82,7°	0,06/ 62,6°	0,45/−39,2°	17,1
	1200	0,42/+176,6°	4,7/ 77,5°	0,06/ 64,0°	0,44/−41,4°	15,3
	1500	0,42/+171,2°	3,9/ 72,8°	0,07/ 67,4°	0,39/−46,4°	13,3
	2000	0,41/+153,5°	2,9/ 62,9°	0,10/ 68,0°	0,38/−58,5°	10,5

s-parameters (common emitter) at V_{CE} = 5 V; T_{amb} = 25 °C; typical values ←

I_C mA	f MHz	s_{ie}	s_{fe}	s_{re}	s_{oe}	G_{UM} dB
20	40	0,58/ −26,9°	38,9/165,5°	0,01/ 72,8°	0,95/−10,2°	44,1
	100	0,54/ −66,6°	33,1/142,5°	0,01/ 64,2°	0,84/−24,2°	37,2
	200	0,47/−107,4°	22,6/122,3°	0,02/ 57,4°	0,62/−32,2°	30,3
	500	0,46/−153,9°	10,7/ 96,8°	0,03/ 59,9°	0,44/−36,2°	22,6
	800	0,44/−170,2°	7,0/ 86,8°	0,05/ 65,3°	0,41/−39,1°	18,6
	1000	0,45/−179,6°	5,6/ 80,4°	0,06/ 66,0°	0,41/−39,7°	16,7
	1200	0,46/+169,6°	4,6/ 75,8°	0,06/ 67,4°	0,39/−41,9°	15,0
	1500	0,45/+165,3°	3,8/ 71,0°	0,08/ 70,3°	0,35/−47,6°	13,1
	2000	0,45/+148,8°	2,8/ 61,7°	0,10/ 70,2°	0,34/−60,2°	10,5
30	40	0,47/ −42,2°	43,2/159,9°	0,01/ 69,0°	0,92/−12,1°	42,0
	100	0,46/ −93,3°	33,0/133,8°	0,01/ 58,1°	0,76/−24,7°	35,1
	200	0,45/−132,2°	20,4/114,8°	0,02/ 58,3°	0,57/−27,8°	28,9
	500	0,49/−166,2°	9,2/ 93,5°	0,03/ 64,4°	0,46/−29,5°	21,4
	800	0,47/−178,6°	6,0/ 84,8°	0,04/ 69,7°	0,44/−34,8°	17,5
	1000	0,48/+173,9°	4,8/ 79,0°	0,05/ 70,0°	0,45/−36,7°	15,7
	1200	0,50/+165,0°	3,9/ 74,5°	0,06/ 71,4°	0,43/−40,6°	14,1
	1500	0,49/+160,8°	3,3/ 70,0°	0,07/ 74,4°	0,39/−46,8°	12,1
	2000	0,50/+145,2°	2,4/ 60,8°	0,10/ 74,0°	0,38/−61,1°	9,7

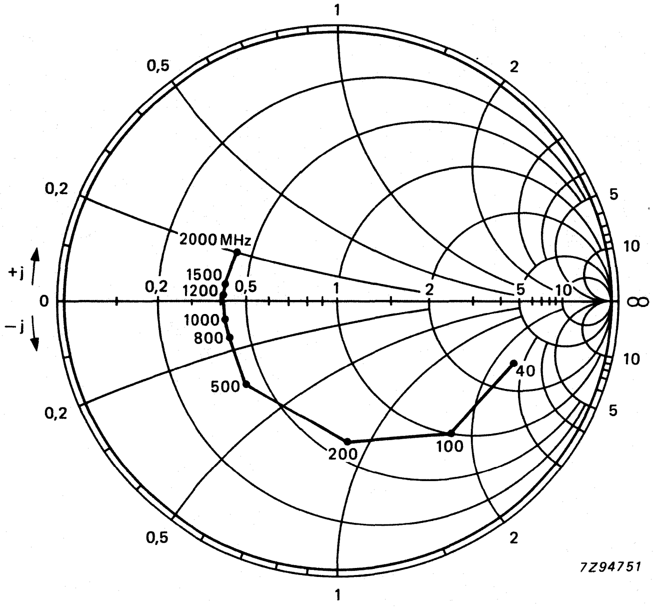

Fig. 4 Input impedance, derived from input reflection coefficient s_{ie} coordinates, in ohm x 50.

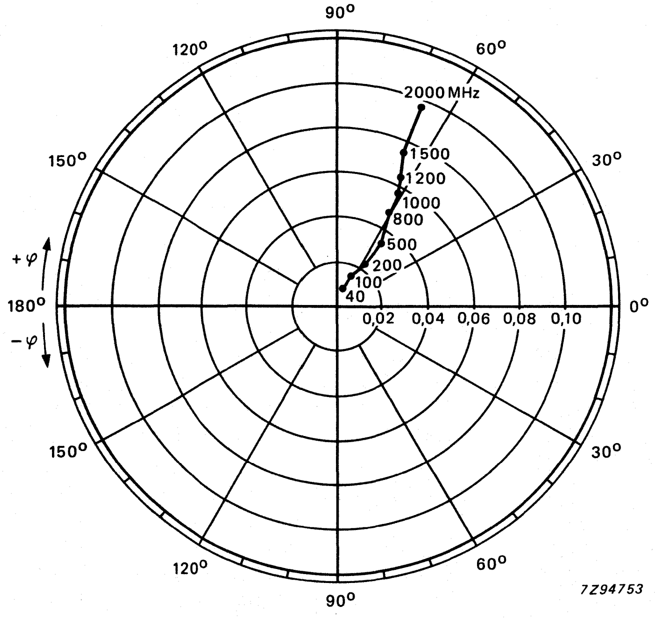

Fig. 5 Reverse transmission coefficient s_{re}.

Conditions for Figs 4 to 7: V_{CE} = 10 V; I_C = 14 mA; T_{amb} = 25 °C.

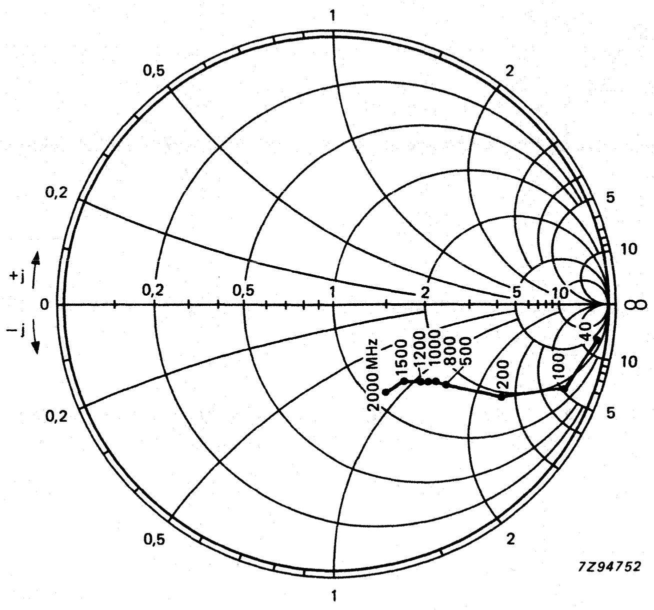

Fig. 6 Output impedance, derived from output reflection coefficient s_{oe} coordinates, in ohm x 50.

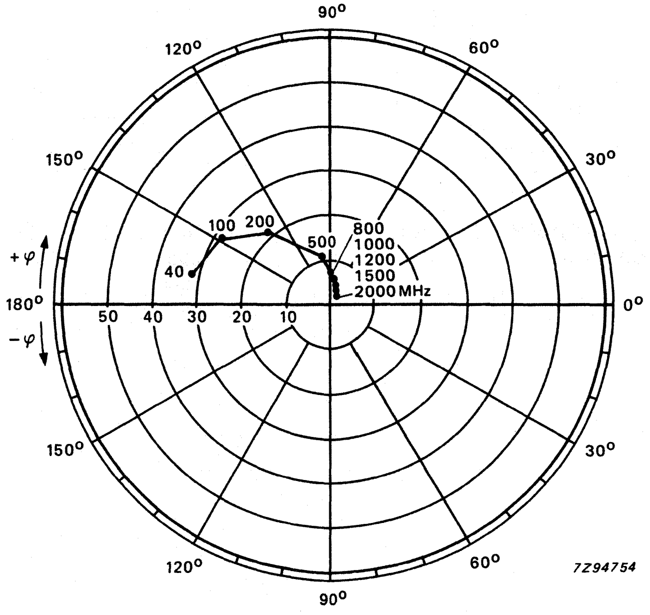

Fig. 7 Forward transmission coefficient s_{fe}.

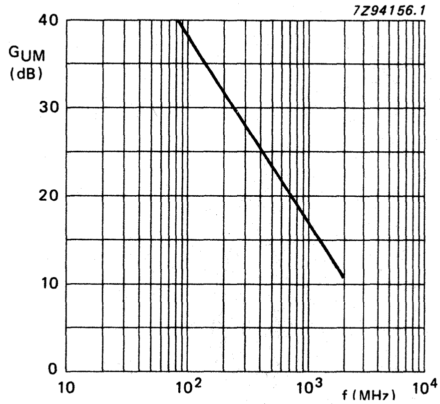

Fig. 8 V_{CE} = 10 V; I_C = 14 mA; T_{amb} = 25 °C; typical values.

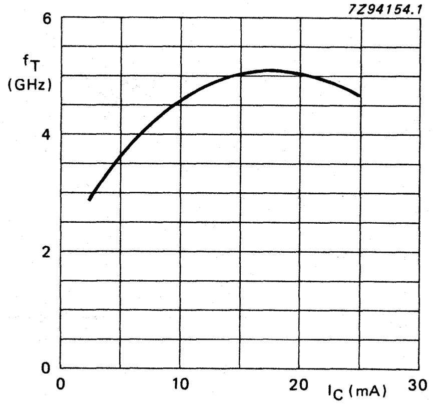

Fig. 9 V_{CE} = 10 V; f = 500 MHz; T_j = 25 °C; typical values.

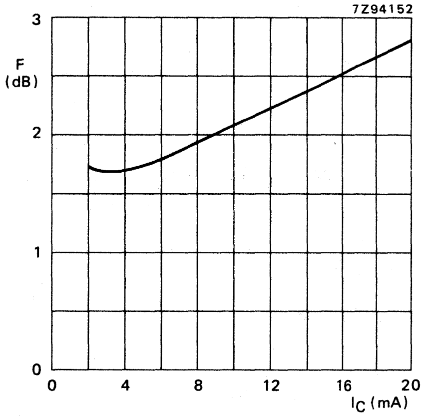

Fig. 10 V_{CE} = 10 V; f = 800 MHz; Z_S = opt.; T_{amb} = 25 °C; typical values.

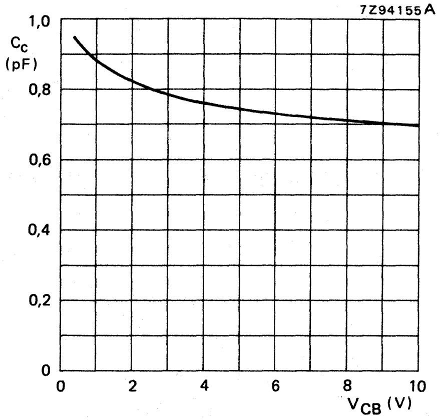

Fig. 11 $I_E = i_e = 0$; f = 1 MHz; T_j = 25 °C; typical values.

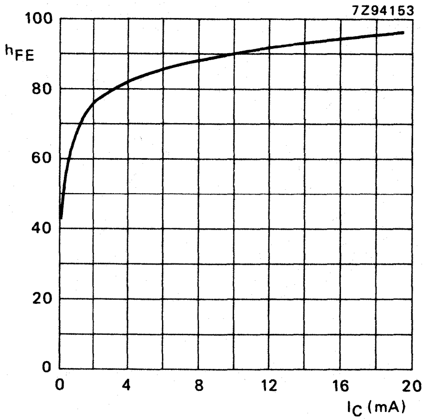

Fig. 12 V_{CE} = 10 V; T_j = 25 °C; typical values.

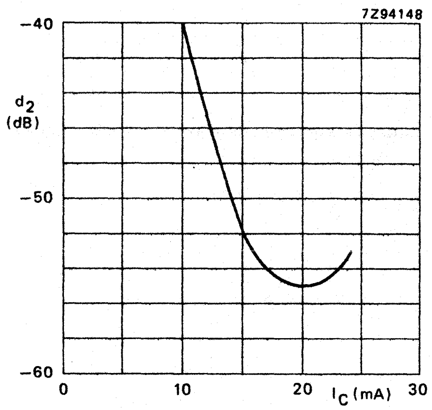

Fig. 13 $V_{CE} = 10$ V; $V_o = 60$ mV; $f_{(p+q)} = 810$ MHz; $T_{amb} = 25$ °C; typical values.

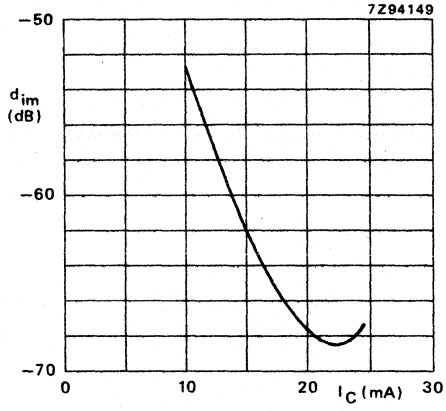

Fig. 14 $V_{CE} = 10$ V; $V_o = 150$ mV; $f_{(p+q)} = 793{,}25$ MHz; $T_{amb} = 25$ °C; typical values.

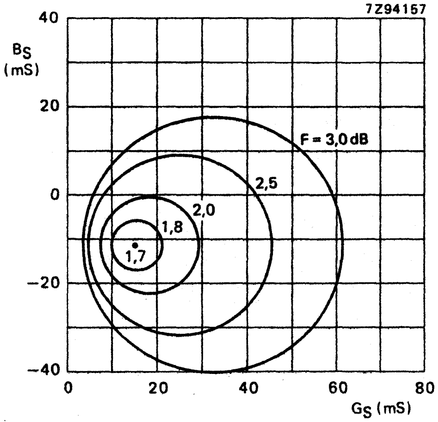

Fig. 15 Circles of constant noise figure; $I_C = 4$ mA; $V_{CE} = 10$ V; f = 800 MHz; typical values.

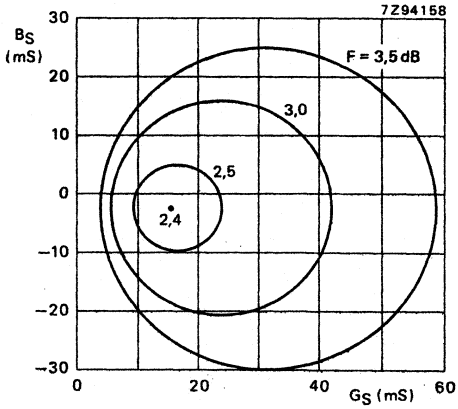

Fig. 16 Circles of constant noise figure; $I_C = 14$ mA; $V_{CE} = 10$ V; f = 800 MHz; typical values.

CLASS-B OPERATION

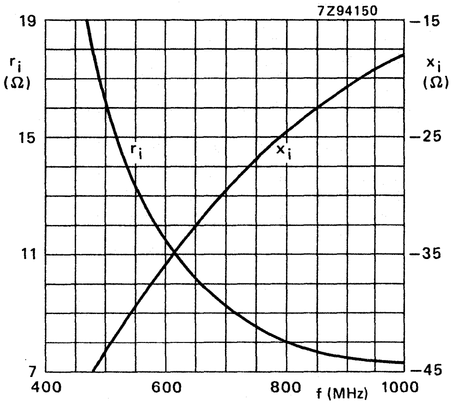

Fig. 17 Input impedance (series components).

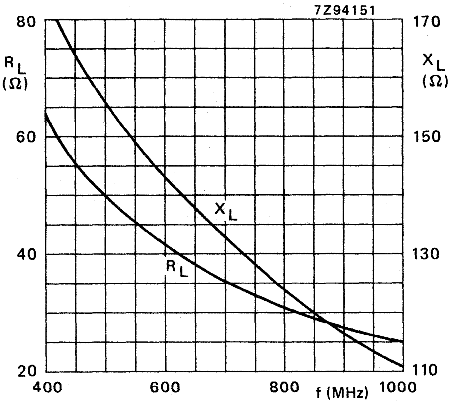

Fig. 18 Load impedance (series components).

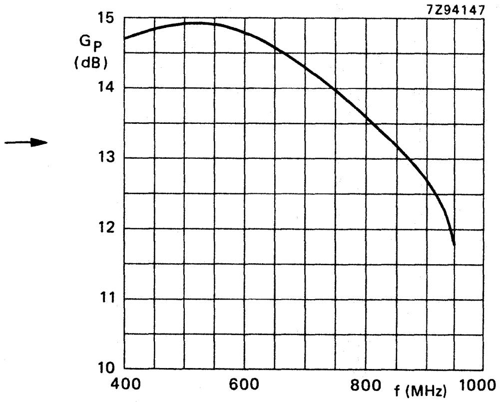

Fig. 19 Power gain versus frequency.

Conditions for Figs 17 to 19:

V_{CE} = 10 V; P_L = 100 mW; T_{amb} = 25 °C; typical values.

OPERATING NOTE for Figs 17 to 19:

A base-emitter resistor of 82 Ω is recommended to avoid oscillation. This resistor must be effective for r.f. only.

N-P-N 2 GHz WIDEBAND TRANSISTOR

N-P-N transistor in a four-lead dual-emitter plastic envelope (SOT-103). This device is designed for application in wideband amplifiers, such as in CATV and MATV systems, up to 2 GHz.

P-N-P complement is BFG23.

QUICK REFERENCE DATA

Collector-base voltage (open emitter)	V_{CBO}	max.	15	V
Collector-emitter voltage (open base)	V_{CEO}	max.	12	V
Collector current (d.c.)	I_C	max.	35	mA
Total power dissipation up to T_{amb} = 60 °C	P_{tot}	max.	300	mW
Junction temperature	T_j	max.	150	°C
D.C. current gain I_C = 30 mA; V_{CE} = 5 V	h_{FE}	min.	40	
Transition frequency at f = 500 MHz I_C = 30 mA; V_{CE} = 5 V	f_T	typ.	6,0	GHz
Feedback capacitance at f = 1 MHz I_C = 0; V_{CE} = 5 V	C_{re}	typ.	0,5	pF
Noise figure at optimum source impedance I_C = 30 mA; V_{CE} = 8 V; f = 800 MHz	F	typ.	2,3	dB
Maximum unilateral power gain at f = 800 MHz I_C = 30 mA; V_{CE} = 8 V	G_{UM}	typ.	17,5	dB
Output power at 1 dB gain compression V_{CE} = 8 V; I_C = 30 mA; f = 800 MHz	P_{L1}	typ.	+17	dBm
Third order intercept point V_{CE} = 8 V; I_C = 30 mA; f = 800 MHz	ITO	typ.	+36	dBm

MECHANICAL DATA

SOT-103 (see Fig. 1).

MECHANICAL DATA

Dimensions in mm

Fig. 1 SOT-103.

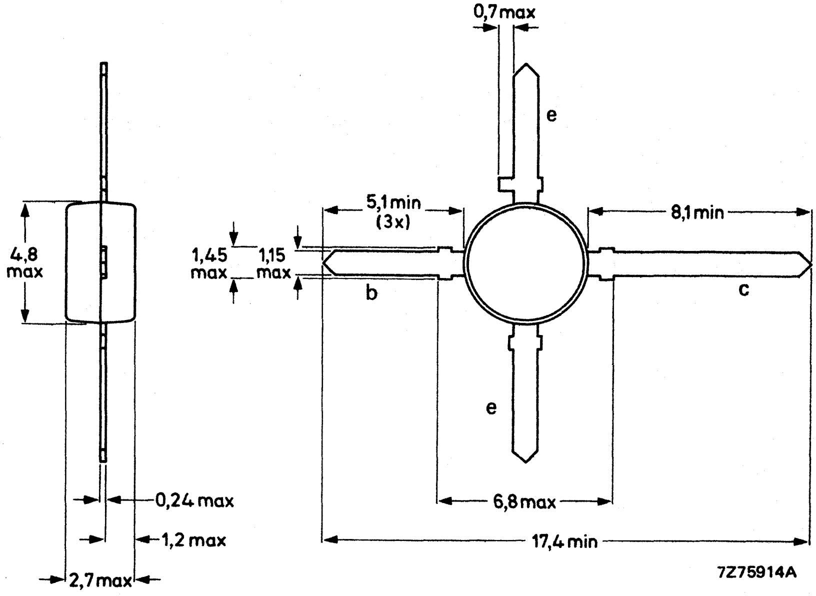

RATINGS

Limiting values in accordance with the Absolute Maximum System (IEC 134)

Collector-base voltage (open emitter)	V_{CBO}	max.	15	V
Collector-emitter voltage (open base)	V_{CEO}	max.	12	V
Emitter-base voltage (open collector)	V_{EBO}	max.	2	V
Collector current				
d.c.	I_C	max.	35	mA
peak value; f > 1 MHz	I_{CM}	max.	50	mA
Total power dissipation up to T_{amb} = 60 °C	P_{tot}	max.	300	mW
Storage temperature	T_{stg}		−65 to +150	°C
Junction temperature	T_j	max.	150	°C

THERMAL RESISTANCE

From junction to ambient in free air mounted on glass-fibre p.c.b. (see Fig. 2) $R_{th\ j\text{-}a}$ = 300 K/W

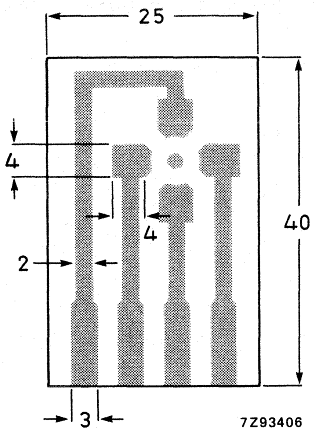

Fig. 2 Requirements for fibre-glass print (dimensions in mm). Single-sided 35 μm Cu-clad epoxy fibre-glass print, thickness 1,5 mm. Tracks are fully tin-lead plated. Shaded area is Cu.

CHARACTERISTICS

$T_j = 25\ ^oC$ unless otherwise specified

Collector cut-off current $I_E = 0$; $V_{CB} = 5$ V	I_{CBO}	max.	50 nA	
D.C. current gain $I_C = 30$ mA; $V_{CE} = 5$ V	h_{FE}	min. typ.	40 90	
Transition frequency at f = 500 MHz $I_C = 30$ mA; $V_{CE} = 5$ V	f_T	typ.	6,0 GHz	
Collector output capacitance at f = 1 MHz $I_E = i_e = 0$; $V_{CB} = 10$ V	C_c	typ.	0,9 pF	←
Emitter capacitance at f = 1 MHz $I_C = i_c = 0$; $V_{EB} = 0,5$ V	C_e	typ.	2,5 pF	
Feedback capacitance at f = 1 MHz $I_E = 0$; $V_{CE} = 10$ V	C_{re}	typ.	0,6 pF	←

Maximum unilateral power gain (s_{re} assumed to be zero)

$$G_{UM} = 10 \log \frac{|s_{fe}|^2}{[1-|s_{ie}|^2]\,[1-|s_{oe}|^2]}$$

$I_C = 30$ mA; $V_{CE} = 8$ V; f = 800 MHz; $T_{amb} = 25\ ^oC$ $I_C = 30$ mA; $V_{CE} = 8$ V; f = 2 GHz; $T_{amb} = 25\ ^oC$	G_{UM}	typ. typ.	17,5 dB 9,5 dB	←

Noise figure at optimum source impedance
$V_{CE} = 8$ V; f = 800 MHz; $T_{amb} = 25\ ^oC$

$I_C = 4$ mA $I_C = 30$ mA	F	typ. typ.	1,6 dB 2,3 dB

←

Output power at 1 dB gain compression V_{CE} = 8 V; I_C = 30 mA; T_{amb} = 25 °C; R_L = 75 Ω; measured at f = 800 MHz	P_{L1}	typ.	+17	dBm
Third order intercept point (see Fig. 3) I_C = 30 mA; V_{CE} = 8 V; R_L = 75 Ω; T_{amb} = 25 °C; P_p = ITO – 6 dB; f_p = 800 MHz; P_q = ITO – 6 dB; f_q = 801 MHz; measured at $f_{(2q\text{-}p)}$ = 802 MHz and at $f_{(2p\text{-}q)}$ = 799 MHz	ITO	typ.	+36	dBm
Output voltage at d_{im} = –60 dB I_C = 30 mA; V_{CE} = 8 V; R_L = 75 Ω; T_{amb} = 25 °C V_p = V_o at d_{im} = –60 dB ; f_p = 795,25 MHz V_q = V_o –6 dB ; f_q = 803,25 MHz V_r = V_o –6 dB ; f_r = 805,25 MHz measured at $f_{(p+q-r)}$ = 793,25 MHz	V_o	typ.	425	mV
Second harmonic distortion (see Fig. 3) V_{CE} = 8 V; I_C = 30 mA; R_L = 75 Ω; VSWR < 2; T_{amb} = 25 °C V_p = V_o = 200 mV at f_p = 250 MHz V_q = V_o = 200 mV at f_q = 560 MHz measured at $f_{(p+q)}$ = 810 MHz	d_2	typ.	–50	dB

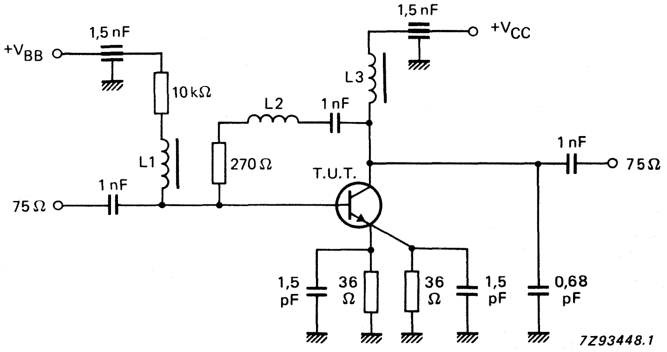

Fig. 3 Intermodulation distortion and second harmonic distortion MATV test circuit.

L1 = L3 = 5 μH Ferroxcube choke
L2 = 3 turns Cu wire (0,4 mm), internal diameter 3 mm, winding pitch 1 mm

s-parameters (common emitter) at V_{CE} = 8 V; T_{amb} = 25 °C; typical values

I_C mA	f MHz	s_{ie}	s_{fe}	s_{re}	s_{oe}	G_{UM} dB
2	40	0,87/ −12,7°	1,0/173,4°	0,01/ 82,7°	0,99/ −3,3°	41,7
	100	0,88/ −35,0°	6,9/159,0°	0,03/ 71,2°	0,97/−10,1°	35,8
	200	0,80/ −66,1°	5,8/142,0°	0,05/ 57,7°	0,88/−18,5°	26,3
	500	0,77/−125,7°	3,9/106,8°	0,08/ 33,0°	0,75/−30,8°	19,2
	800	0,72/−154,0°	2,7/ 90,0°	0,08/ 27,5°	0,68/−38,5°	14,4
	1000	0,71/−168,4°	2,2/ 79,2°	0,08/ 25,1°	0,68/−41,8°	12,7
	1200	0,72/+178,8°	1,8/ 71,3°	0,07/ 27,2°	0,68/−48,7°	10,8
	1500	0,71/+166,3°	1,5/ 63,8°	0,06/ 36,2°	0,60/−54,7°	8,5
	2000	0,73/+145,3°	1,1/ 50,1°	0,07/ 57,0°	0,58/−73,0°	6,0
5	40	0,73/ −19,4°	15,3/170,4°	0,01/ 79,1°	0,99/ −6,5°	43,5
	100	0,73/ −50,8°	14,3/152,0°	0,02/ 65,9°	0,94/−17,7°	35,6
	200	0,67/ −89,5°	11,2/132,3°	0,04/ 52,7°	0,77/−27,5°	27,4
	500	0,66/−145,6°	6,1/ 99,5°	0,05/ 37,4°	0,56/−37,8°	19,9
	800	0,64/−168,6°	4,1/ 85,8°	0,06/ 40,9°	0,50/−43,8°	15,8
	1000	0,64/+179,7°	3,3/ 77,0°	0,06/ 43,6°	0,50/−44,8°	13,9
	1200	0,65/+168,8°	2,7/ 71,0°	0,06/ 48,5°	0,48/−49,8°	12,2
	1500	0,65/+159,3°	2,3/ 64,0°	0,07/ 56,8°	0,43/−56,3°	10,3
	2000	0,67/+140,5°	1,7/ 51,9°	0,09/ 66,5°	0,42/−73,0°	7,9
10	40	0,57/ −29,4°	25,4/166,5°	0,01/ 76,3°	0,97/−10,2°	41,5
	100	0,58/ −71,8°	22,1/144,3°	0,02/ 61,5°	0,86/−25,2°	34,5
	200	0,57/−114,0°	15,6/123,8°	0,03/ 51,0°	0,64/−35,5°	27,9
	500	0,61/−160,7°	7,6/ 95,0°	0,04/ 47,4°	0,43/−43,0°	20,5
	800	0,60/−178,5°	5,0/ 83,3°	0,05/ 54,5°	0,38/−46,8°	16,6
	1000	0,60/+171,9°	4,0/ 75,7°	0,06/ 57,4°	0,38/−47,5°	14,7
	1200	0,62/+162,1°	3,3/ 70,8°	0,07/ 61,1°	0,36/−50,9°	13,0
	1500	0,61/+154,8°	2,7/ 64,0°	0,08/ 66,2°	0,32/−58,4°	11,2
	2000	0,63/+137,2°	2,0/ 53,2°	0,11/ 70,0°	0,32/−73,9°	8,9
20	40	0,39/ −47,1°	37,2/161,5°	0,01/ 71,7°	0,94/−14,7°	41,8
	100	0,47/ −99,9°	29,9/136,3°	0,02/ 59,8°	0,77/−32,6°	34,4
	200	0,52/−137,7°	19,2/116,3°	0,02/ 53,2°	0,52/−41,9°	28,4
	500	0,59/−171,6°	8,6/ 91,8°	0,04/ 58,7°	0,33/−46,5°	21,0
	800	0,57/+174,5°	5,6/ 81,8°	0,05/ 64,6°	0,30/−49,5°	17,1
	1000	0,59/+166,5°	4,5/ 74,5°	0,06/ 66,4°	0,30/−49,6°	15,2
	1200	0,61/+157,6°	3,7/ 70,3°	0,07/ 68,9°	0,28/−51,7°	13,6
	1500	0,59/+151,8°	3,0/ 63,8°	0,09/ 71,4°	0,25/−60,3°	11,8
	2000	0,61/+134,9°	2,3/ 53,7°	0,12/ 71,6°	0,25/−75,4°	9,4
30	40	0,31/ −65,9°	44,7/158,2°	0,01/ 71,3°	0,92/−17,6°	41,7
	100	0,45/−118,8°	33,5/131,5°	0,01/ 59,5°	0,71/−36,6°	34,5
	200	0,51/−149,7°	20,6/112,5°	0,02/ 56,8°	0,46/−44,3°	29,7
	500	0,58/−176,5°	8,9/ 90,0°	0,03/ 64,1°	0,29/−47,4°	21,2
	800	0,57/+171,5°	5,8/ 80,3°	0,05/ 69,6°	0,27/−49,9°	17,5
	1000	0,58/+164,2°	4,6/ 73,7°	0,06/ 69,9°	0,26/−50,0°	15,4
	1200	0,61/+155,8°	3,8/ 69,8°	0,07/ 71,7°	0,24/−51,4°	13,8
	1500	0,58/+150,6°	3,1/ 63,3°	0,09/ 73,3°	0,22/−60,9°	11,9
	2000	0,61/+133,9°	2,4/ 53,4°	0,12/ 72,5°	0,22/−75,9°	9,5

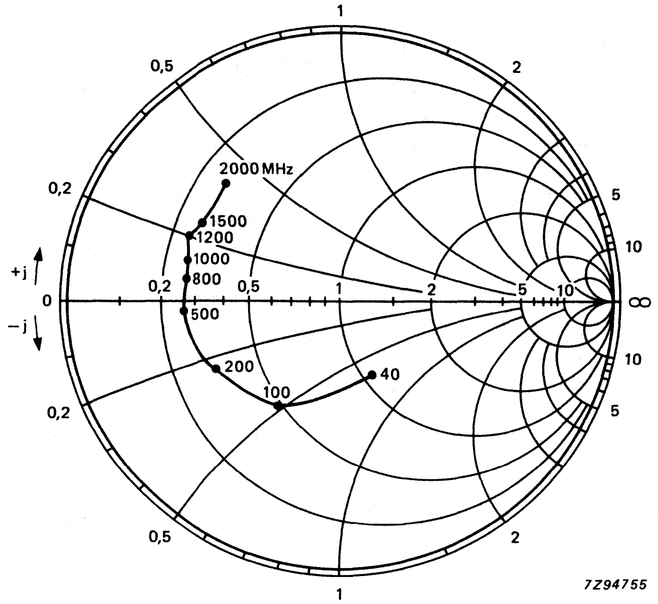

Fig. 4 Input impedance, derived from input reflection coefficient s_{ie} coordinates, in ohm x 50.

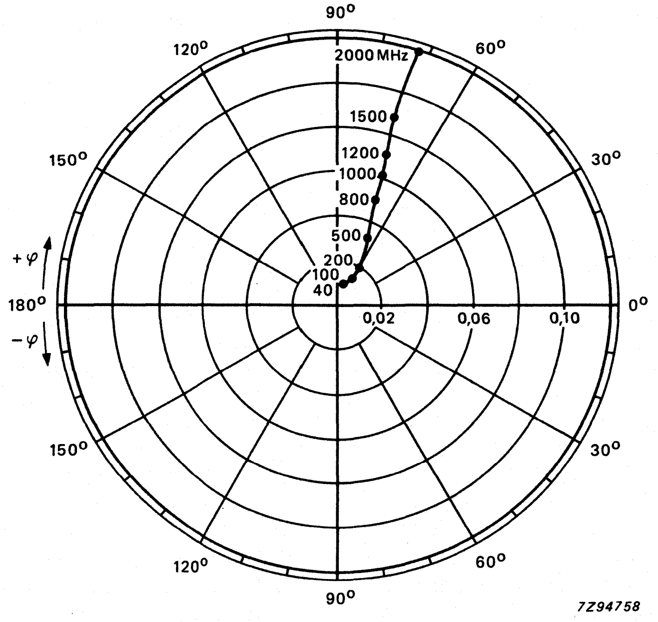

Fig. 5 Reverse transmission coefficient s_{re}.

Conditions for Figs 4 to 7: V_{CE} = 8 V; I_C = 30 mA; T_{amb} = 25 °C.

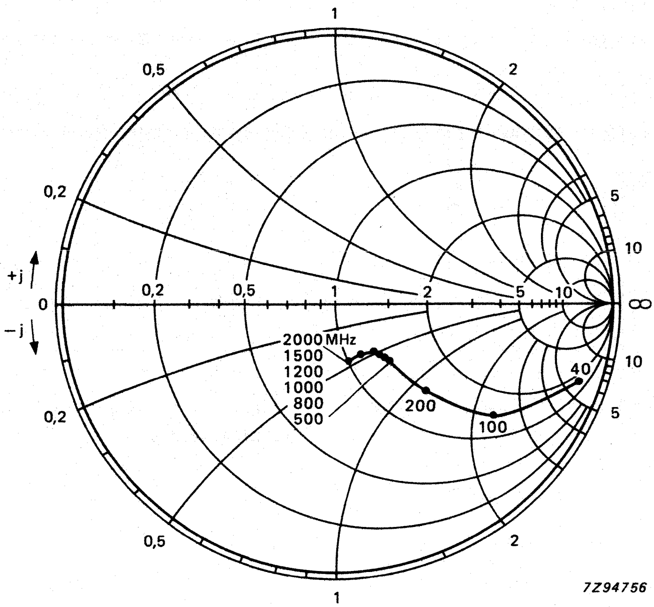

Fig. 6 Output impedance, derived from output reflection coefficient s_{oe} coordinates, in ohm x 50.

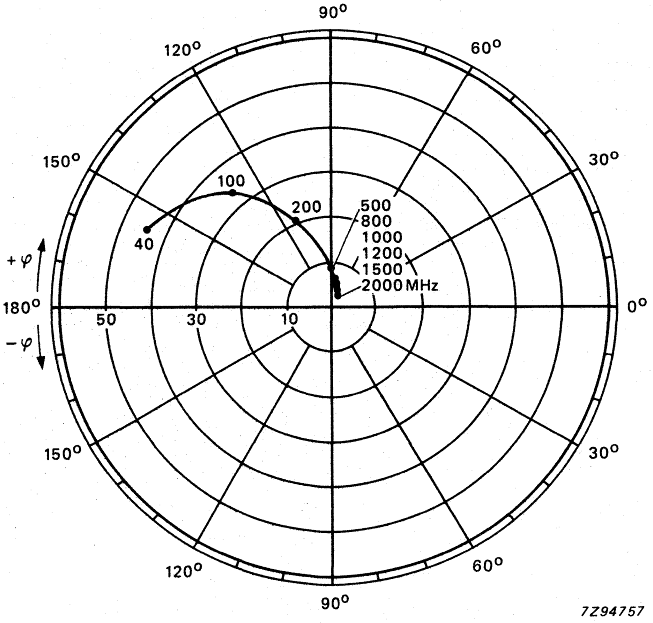

Fig. 7 Forward transmission coefficient s_{fe}.

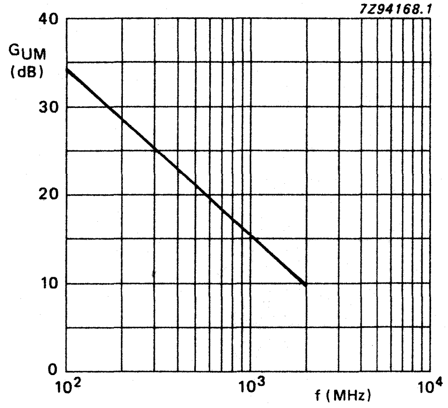

Fig. 8 V_{CE} = 8 V; I_C = 30 mA; T_{amb} = 25 °C; typical values.

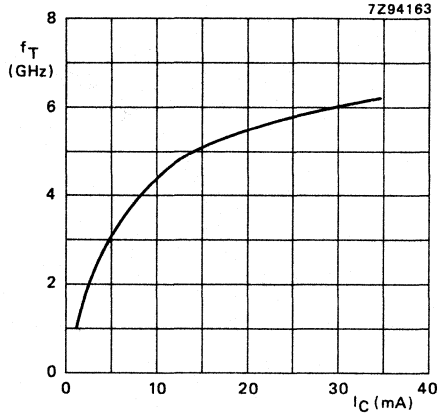

Fig. 9 V_{CE} = 8 V; f = 500 MHz; T_j = 25 °C; typical values.

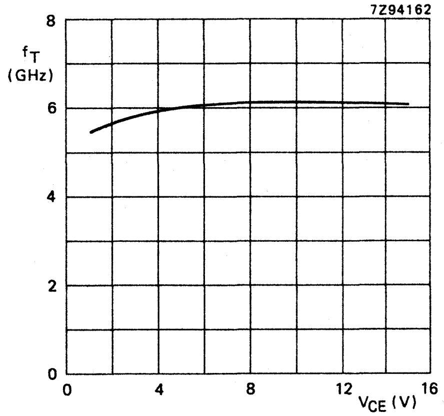

Fig. 10 I_C = 30 mA; f = 500 MHz; T_j = 25 °C; typical values.

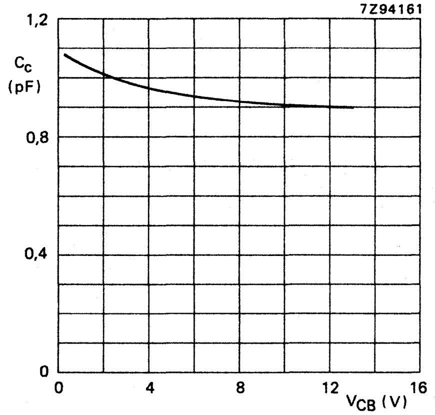

Fig. 11 I_E = i_e = 0; f = 1 MHz; T_j = 25 °C; typical values.

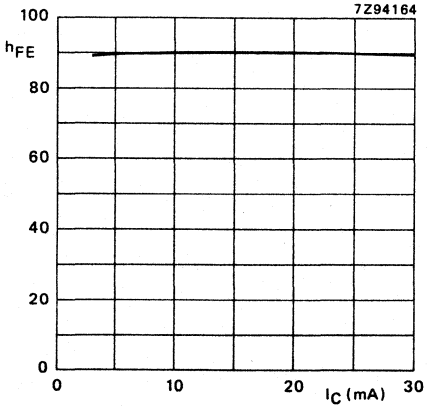

Fig. 12 V_{CE} = 5 V; T_j = 25 °C; typical values.

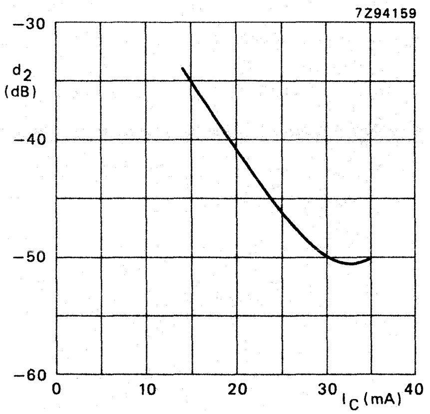

Fig. 13 $V_{CE} = 8$ V; $V_o = 200$ mV; $f_{(p+q)} = 810$ MHz; $T_{amb} = 25$ °C; typical values.

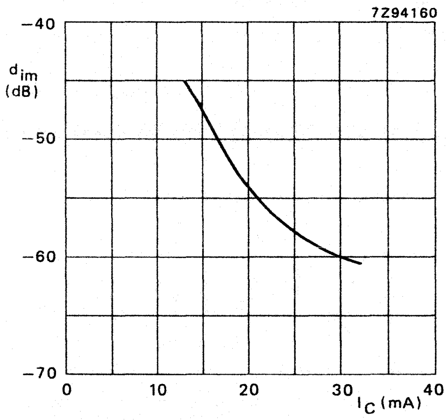

Fig. 14 $V_{CE} = 8$ V; $V_o = 425$ mV; $f_{(p+q-r)} = 793{,}25$ MHz; $T_{amb} = 25$ °C; typical values.

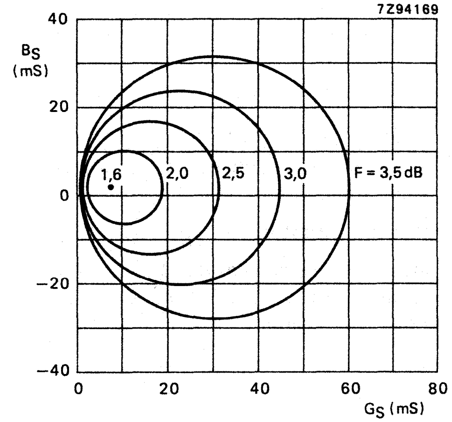

Fig. 15 Circles of constant noise figure; $I_C = 4$ mA; $V_{CE} = 8$ V; f = 800 MHz; $T_{amb} = 25$ °C; typical values.

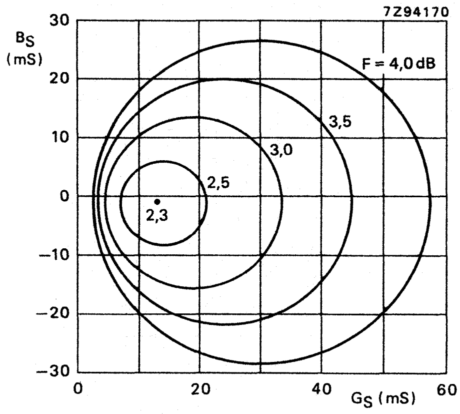

Fig. 16 Circles of constant noise figure; $I_C = 30$ mA; $V_{CE} = 8$ V; f = 800 MHz; $T_{amb} = 25$ °C; typical values.

CLASS-B OPERATION

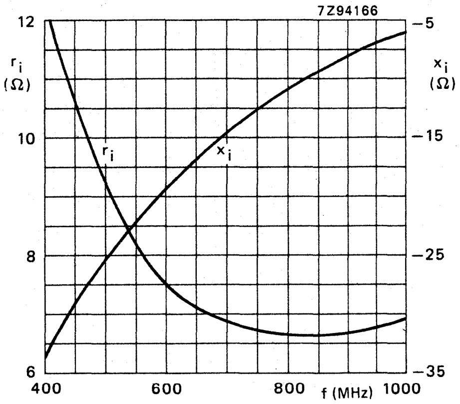

Fig. 17 Input impedance (series components).

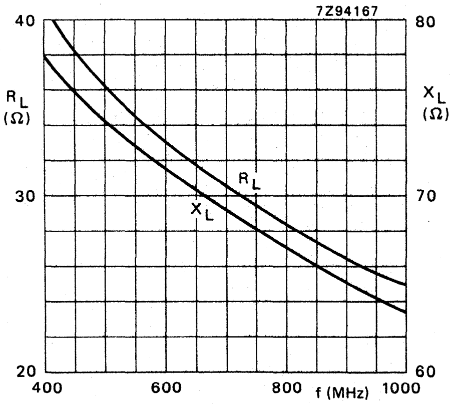

Fig. 18 Load impedance (series components).

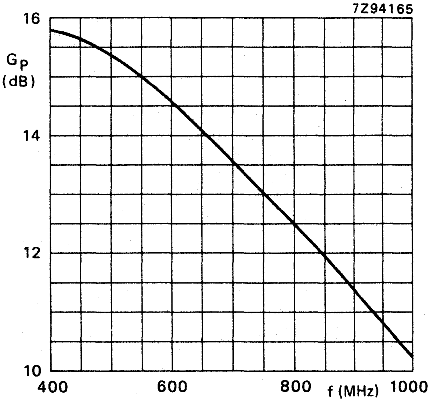

Fig. 19 Power gain versus frequency.

Conditions for Figs 17 to 19:

V_{CE} = 7,5 V; P_L = 160 mW; T_{amb} = 25 °C; typical values.

OPERATING NOTE for Figs 17 to 19:

A base-emitter resistor of 82 Ω is recommended to avoid oscillation. This resistor must be effective for r.f. only.

N-P-N 2 GHz WIDEBAND TRANSISTOR

N-P-N transistor in a four-lead dual-emitter SOT-143 envelope. The device is primarily intended for use in v.h.f. and u.h.f. wideband amplifiers and features low noise and high power gain.

QUICK REFERENCE DATA

Collector-base voltage (open emitter)	V_{CBO}	max.	20	V
Collector-emitter voltage (open base)	V_{CEO}	max.	15	V
Collector current (d.c.)	I_C	max.	25	mA
Total power dissipation up to T_{amb} = 25 °C	P_{tot}	max.	300	mW
Junction temperature	T_j	max.	150	°C
D.C. current gain I_C = 14 mA; V_{CE} = 10 V	h_{FE}	min. typ.	40 90	
Transition frequency at f = 500 MHz I_C = 14 mA; V_{CE} = 10 V	f_T	typ.	5,0	GHz
Feedback capacitance at f = 1 MHz I_C = 0; V_{CE} = 10 V	C_{re}	typ.	0,35	pF
Noise figure at f = 800 MHz I_C = 4 mA; V_{CE} = 10 V; Z_S = opt.	F	typ.	1,8	dB
Maximum unilateral power gain I_C = 14 mA; V_{CE} = 10 V f = 800 MHz f = 2 GHz	G_{UM}	typ. typ.	17,5 9,5	dB dB

MECHANICAL DATA

Dimensions in mm

Fig. 1 SOT-143.

Marking code: P8

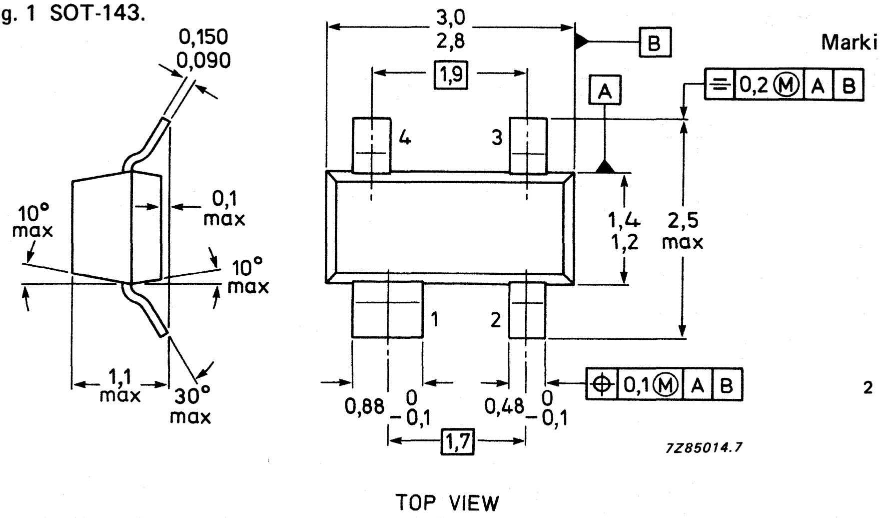

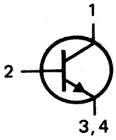

RATINGS

Limiting values in accordance with the Absolute Maximum System (IEC 134)

Collector-base voltage (open emitter)	V_{CBO}	max.	20	V
Collector-emitter voltage (open base)	V_{CEO}	max.	15	V
Emitter-base voltage (open collector)	V_{EBO}	max.	2	V
Collector current (d.c.)	I_C	max.	25	mA
Total power dissipation up to T_{amb} = 25 °C and mounted on a ceramic substrate of 8 mm x 10 mm x 0,7 mm	P_{tot}	max.	300	mW
Storage temperature	T_{stg}	−65 to +150		°C
Junction temperature	T_j	max.	150	°C

THERMAL RESISTANCE

From junction to ambient and mounted on a ceramic substrate of 8 mm x 10 mm x 0,7 mm	$R_{th\ j\text{-}a}$		430	K/W

CHARACTERISTICS

T_j = 25 °C unless otherwise specified

Collector cut-off current $I_E = 0$; $V_{CB} = 10$ V	I_{CBO}	max.	50	nA
D.C. current gain $I_C = 14$ mA; $V_{CE} = 10$ V	h_{FE}	min. typ.	40 90	
Transition frequency at f = 500 MHz $I_C = 14$ mA; $V_{CE} = 10$ V	f_T	typ.	5,0	GHz
Collector capacitance at f = 1 MHz $I_E = I_e = 0$; $V_{CB} = 10$ V	C_c	typ.	0,6	pF
Emitter capacitance at f = 1 MHz $I_C = I_c = 0$; $V_{EB} = 0,5$ V	C_e	typ.	1,2	pF
Feedback capacitance at f = 1 MHz $I_C = 0$; $V_{CE} = 10$ V	C_{re}	typ.	0,35	pF

Maximum unilateral power gain (s_{re} assumed to be zero)

$$G_{UM} = 10 \log \frac{|s_{fe}|^2}{[1-|s_{ie}|^2]\,[1-|s_{oe}|^2]}$$

$I_C = 14$ mA; $V_{CE} = 10$ V; $T_{amb} = 25$ °C:				
f = 800 MHz	G_{UM}	typ.	17,5	dB
f = 2 GHz		typ.	9,5	dB
Noise figure at f = 800 MHz and $T_{amb} = 25$ °C $I_C = 4$ mA; $V_{CE} = 10$ V; Z_S = opt.	F	typ.	1,8	dB

s-parameters (common emitter) at V_{CE} = 5 V; T_{amb} = 25 °C; typical values

I_C mA	f MHz	s_{ie}	s_{fe}	s_{re}	s_{oe}	G_{UM} dB
2	40	0,87/ −9,1°	7,0/174,7°	0,01/ 82,1°	1,00/ −2,8°	50,0
	100	0,88/ −26,2°	6,9/162,5°	0,02/ 75,2°	1,01/ −9,0°	39,6
	200	0,79/ −49,8°	6,1/148,0°	0,04/ 65,0°	0,92/−16,6°	28,2
	500	0,68/−102,5°	4,6/115,2°	0,07/ 44,4°	0,81/−30,0°	20,6
	800	0,59/−153,5°	3,2/ 97,7°	0,07/ 39,3°	0,73/−39,7°	15,3
	1000	0,56/−149,0°	2,7/ 86,8°	0,08/ 36,6°	0,73/−44,0°	13,6
	1200	0,54/−164,7°	2,2/ 78,4°	0,08/ 36,1°	0,72/−50,8°	11,5
	1500	0,53/−178,6°	1,9/ 70,8°	0,08/ 40,6°	0,63/−57,9°	9,0
	2000	0,51/ 158,1°	1,4/ 55,7°	0,08/ 46,3°	0,63/−76,2°	6,3
5	40	0,74/ −14,0°	14,4/172,1°	0,01/ 80,4°	0,99/ −4,8°	45,2
	100	0,73/ −37,7°	13,8/156,7°	0,02/ 71,0°	0,98/−13,8°	39,6
	200	0,64/ −68,7°	11,4/138,8°	0,03/ 60,1°	0,84/−22,8°	28,7
	500	0,55/−126,5°	7,0/106,5°	0,05/ 46,3°	0,66/−35,0°	21,0
	800	0,50/−152,7°	4,7/ 91,5°	0,06/ 47,4°	0,59/−42,8°	16,6
	1000	0,49/−166,7°	3,9/ 82,7°	0,06/ 47,8°	0,59/−45,9°	14,8
	1200	0,48/ 179,7°	3,2/ 76,1°	0,07/ 49,8°	0,58/−51,3°	12,9
	1500	0,48/ 169,9°	2,6/ 69,0°	0,08/ 54,2°	0,51/−58,7°	10,8
	2000	0,48/ 148,9°	1,9/ 56,0°	0,09/ 57,5°	0,51/−75,9°	8,2
10	40	0,59/ −21,1°	23,6/168,8°	0,01/ 73,4°	0,98/ −7,3°	44,3
	100	0,57/ −53,7°	21,6/149,8°	0,02/ 67,1°	0,92/−19,0°	36,7
	200	0,50/ −92,0°	16,2/129,8°	0,02/ 56,9°	0,74/−28,5°	28,9
	500	0,48/−146,3°	8,7/100,2°	0,04/ 52,2°	0,54/−37,6°	21,4
	800	0,46/−167,6°	5,7/ 87,5°	0,05/ 56,9°	0,49/−44,1°	17,3
	1000	0,46/−179,1°	4,6/ 80,0°	0,06/ 57,9°	0,50/−46,6°	15,5
	1200	0,47/ 169,1°	3,8/ 74,6°	0,06/ 60,0°	0,48/−51,1°	13,7
	1500	0,46/ 162,3°	3,1/ 67,9°	0,08/ 62,4°	0,44/−59,1°	11,7
	2000	0,46/ 142,8°	2,3/ 56,3°	0,09/ 63,8°	0,44/−75,9°	9,2
14	40	0,50/ −26,3°	28,8/166,7°	0,01/ 74,4°	0,98/ −8,8°	43,9
	100	0,49/ −64,6°	25,4/145,8°	0,02/ 66,4°	0,89/−21,5°	36,2
	200	0,46/−105,3°	18,2/125,5°	0,02/ 57,5°	0,68/−30,6°	29,0
	500	0,47/−154,3°	9,2/ 97,9°	0,03/ 56,7°	0,50/−37,8°	21,6
	800	0,45/−173,4°	6,0/ 86,0°	0,05/ 61,1°	0,46/−44,0°	17,5
	1000	0,46/ 176,3°	4,8/ 78,8°	0,05/ 52,2°	0,46/−46,4°	15,7
	1200	0,47/ 165,3°	3,9/ 73,9°	0,06/ 63,8°	0,45/−50,7°	13,9
	1500	0,46/ 159,5°	3,2/ 67,3°	0,08/ 65,4°	0,41/−59,1°	12,0
	2000	0,46/ 140,6°	2,4/ 56,1°	0,10/ 65,9°	0,41/−75,8°	9,5
20	40	0,42/ −33,9°	34,3/164,1°	0,01/ 73,6°	0,97/−10,4°	43,3
	100	0,43/ −79,0°	28,8/141,3°	0,01/ 63,1°	0,84/−24,0°	35,4
	200	0,42/−120,1°	19,7/121,0°	0,02/ 58,1°	0,63/−31,3°	29,0
	500	0,46/−162,0°	9,4/ 95,5°	0,03/ 60,6°	0,46/−37,1°	21,6
	800	0,45/−178,4°	6,1/ 84,5°	0,05/ 65,0°	0,43/−43,5°	17,6
	1000	0,46/ 172,4°	4,9/ 77,8°	0,05/ 65,6°	0,44/−45,9°	15,7
	1200	0,48/ 162,3°	4,0/ 73,1°	0,06/ 66,9°	0,43/−50,1°	14,0
	1500	0,46/ 157,2°	3,3/ 66,7°	0,08/ 67,3°	0,39/−58,9°	12,1
	2000	0,47/ 138,9°	2,5/ 55,8°	0,10/ 67,6°	0,39/−75,9°	9,5

s-parameters (common-emitter) at V_{CE} = 10 V; T_{amb} = 25 °C; typical values.

I_C mA	f MHz	s_{ie}	s_{fe}	s_{re}	s_{oe}	G_{UM} dB
2	40	0,87/ −8,9°	6,8/174,8°	0,01/ 80,8°	1,00/ −2,5°	49,9
	100	0,88/ −25,8°	6,8/162,8°	0,02/ 76,3°	1,01/ −8,8°	39,5
	200	0,79/ −49,3°	6,0/148,3°	0,04/ 64,8°	0,92/−16,3°	28,2
	500	0,69/−101,8°	4,5/115,5°	0,07/ 44,9°	0,82/−29,8°	20,6
	800	0,59/−131,9°	3,2/ 98,0°	0,08/ 39,1°	0,73/−39,6°	15,2
	1000	0,56/−148,5°	2,7/ 87,0°	0,08/ 36,3°	0,73/−43,8°	13,5
	1200	0,54/−164,1°	2,2/ 78,6°	0,08/ 36,3°	0,72/−50,7°	11,5
	1500	0,53/−178,2°	1,8/ 71,0°	0,08/ 40,5°	0,64/−57,8°	9,0
	2000	0,52/ 158,5°	1,4/ 55,8°	0,08/ 46,3°	0,63/−76,2°	6,3
5	40	0,73/ −14,1°	14,6/172,2°	0,01/ 77,9°	0,99/ −4,8°	44,6
	100	0,72/ −37,9°	14,1/156,6°	0,02/ 71,0°	0,98/−13,8°	39,7
	200	0,63/ −69,2°	11,6/138,7°	0,03/ 60,3°	0,83/−22,9°	28,6
	500	0,55/−127,0°	7,1/106,4°	0,05/ 46,4°	0,66/−35,0°	21,1
	800	0,50/−153,1°	4,8/ 91,5°	0,06/ 48,0°	0,58/−42,7°	16,6
	1000	0,49/−167,1°	3,9/ 82,8°	0,06/ 48,6°	0,59/−45,8°	14,8
	1200	0,48/ 179,5°	3,2/ 76,2°	0,07/ 50,2°	0,58/−51,1°	12,9
	1500	0,48/ 169,8°	2,6/ 69,2°	0,08/ 54,7°	0,51/−58,6°	10,8
	2000	0,47/ 148,7°	2,0/ 56,3°	0,09/ 58,0°	0,51/−75,8°	8,2
10	40	0,59/ −20,9°	23,7/168,9°	0,01/ 76,7°	0,98/ −7,2°	43,5
	100	0,57/ −53,5°	21,6/149,9°	0,02/ 67,5°	0,92/−18,8°	36,7
	200	0,50/ −91,7°	16,2/130,0°	0,02/ 58,0°	0,74/−28,3°	28,9
	500	0,48/−146,0°	8,7/100,5°	0,04/ 52,4°	0,55/−37,3°	21,5
	800	0,46/−167,3°	5,7/ 87,7°	0,05/ 57,2°	0,49/−43,7°	17,3
	1000	0,46/−178,8°	4,6/ 80,3°	0,06/ 58,3°	0,50/−46,3°	15,5
	1200	0,47/ 169,4°	3,8/ 74,8°	0,06/ 60,2°	0,48/−50,9°	13,7
	1500	0,46/ 162,5°	3,1/ 68,0°	0,08/ 62,7°	0,44/−58,9°	11,7
	2000	0,46/ 143,1°	2,3/ 56,5°	0,09/ 64,0°	0,44/−75,6°	9,2
14	40	0,51/ −25,9°	28,5/166,9°	0,01/ 72,3°	0,98/ −8,5°	43,9
	100	0,50/ −63,8°	25,4/146,1°	0,02/ 65,3°	0,89/−21,3°	36,2
	200	0,46/−104,5°	18,2/125,8°	0,02/ 57,6°	0,69/−30,3°	29,0
	500	0,47/−153,6°	9,2/ 98,2°	0,03/ 55,7°	0,50/−37,5°	21,6
	800	0,45/−172,9°	6,0/ 86,2°	0,05/ 61,3°	0,46/−43,7°	17,5
	1000	0,46/ 176,8°	4,8/ 79,0°	0,05/ 62,6°	0,46/−46,2°	15,7
	1200	0,47/ 165,8°	3,9/ 74,1°	0,06/ 63,7°	0,45/−50,4°	14,0
	1500	0,46/ 159,9°	3,2/ 67,5°	0,08/ 65,3°	0,41/−58,9°	12,0
	2000	0,46/ 140,9°	2,4/ 56,4°	0,09/ 65,9°	0,41/−75,6°	9,5
20	40	0,42/ −32,2°	34,3/165,3°	0,01/ 72,8°	0,97/ −9,3°	43,3
	100	0,43/ −77,0°	28,8/142,5°	0,01/ 65,2°	0,85/−22,9°	35,7
	200	0,43/−118,2°	19,7/122,1°	0,02/ 58,3°	0,64/−30,8°	29,0
	500	0,46/−160,6°	9,5/ 96,5°	0,03/ 61,6°	0,47/−36,0°	21,7
	800	0,45/−177,2°	6,1/ 85,5°	0,05/ 65,4°	0,43/−42,3°	17,6
	1000	0,46/ 173,6°	4,9/ 78,8°	0,05/ 66,7°	0,44/−44,8°	15,8
	1200	0,48/ 163,5°	4,0/ 74,1°	0,06/ 68,0°	0,43/−49,1°	14,1
	1500	0,46/ 158,3°	3,3/ 67,5°	0,08/ 68,9°	0,39/−57,7°	12,1
	2000	0,47/ 139,9°	2,5/ 56,7°	0,10/ 68,4°	0,40/−74,7°	9,6

N-P-N 2 GHz WIDEBAND TRANSISTOR

N-P-N transistor in a four-lead dual-emitter SOT-143 envelope. The device is primarily intended for use in u.h.f. and microwave amplifiers and features low noise and high power gain.

QUICK REFERENCE DATA

Collector-base voltage (open emitter)	V_{CBO}	max.	15	V
Collector-emitter voltage (open base)	V_{CEO}	max.	12	V
Collector current (d.c.)	I_C	max.	35	mA
Total power dissipation up to T_{amb} = 25 °C	P_{tot}	max.	300	mW
Junction temperature	T_j	max.	150	°C
D.C. current gain I_C = 30 mA; V_{CE} = 5 V	h_{FE}	min.	40	
		typ.	90	
Transition frequency at f = 500 MHz I_C = 30 mA; V_{CE} = 5 V	f_T	typ.	6,0	GHz
Feedback capacitance at f = 1 MHz I_C = 0; V_{CE} = 5 V	C_{re}	typ.	0,6	pF
Noise figure at f = 800 MHz I_C = 4 mA; V_{CE} = 8 V; Z_S = opt.	F	typ.	1,6	dB
Maximum unilateral power gain I_C = 30 mA; V_{CE} = 8 V f = 800 MHz	G_{UM}	typ.	17,0	dB
f = 2 GHz		typ.	9,0	dB

MECHANICAL DATA

Dimensions in mm

Fig. 1 SOT-143.

Marking code: R8

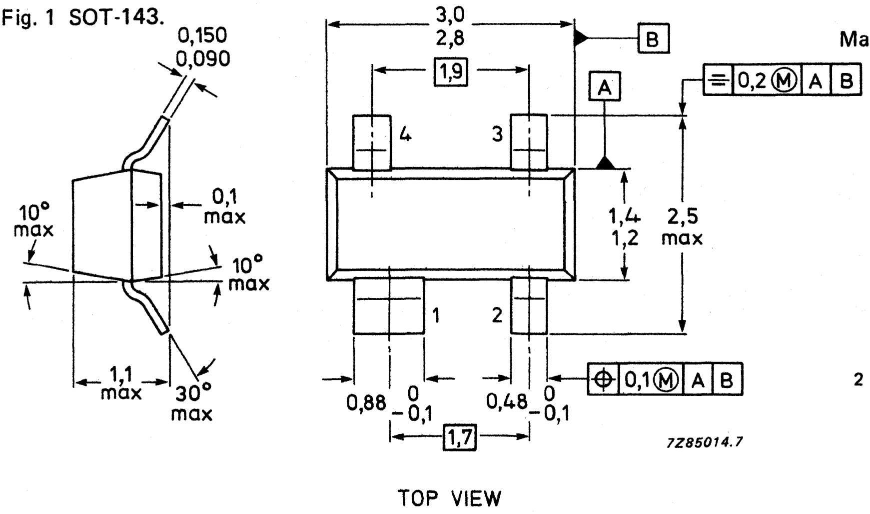

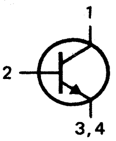

RATINGS

Limiting values in accordance with the Absolute Maximum System (IEC 134)

Collector-base voltage (open emitter)	V_{CBO}	max.	15	V
Collector-emitter voltage (open base)	V_{CEO}	max.	12	V
Emitter-base voltage (open collector)	V_{EBO}	max.	2	V
Collector current (d.c.)	I_C	max.	35	mA
Total power dissipation up to T_{amb} = 25 °C and mounted on a ceramic substrate of 8 mm x 10 mm x 0,7 mm	P_{tot}	max.	300	mW
Storage temperature	T_{stg}		−65 to +150	°C
Junction temperature	T_j	max.	150	°C

THERMAL RESISTANCE

From junction to ambient and mounted on a ceramic substrate of 8 mm x 10 mm x 0,7 mm	$R_{th\ j\text{-}a}$		430	K/W

CHARACTERISTICS

T_j = 25 °C unless otherwise specified

Collector cut-off current $I_E = 0$; $V_{CB} = 5$ V	I_{CBO}	max.	50	nA
D.C. current gain $I_C = 30$ mA; $V_{CE} = 5$ V	h_{FE}	min. typ.	40 90	
Transition frequency at f = 500 MHz $I_C = 30$ mA; $V_{CE} = 5$ V	f_T	typ.	6,0	GHz
Collector capacitance at f = 1 MHz $I_E = I_e = 0$; $V_{CB} = 5$ V	C_c	typ.	0,9	pF
Emitter capacitance at f = 1 MHz $I_C = I_c = 0$; $V_{EB} = 0,5$ V	C_e	typ.	2,5	pF
Feedback capacitance $I_C = 0$; $V_{CE} = 5$ V	C_{re}	typ.	0,6	pF

Maximum unilateral power gain (s_{re} assumed to be zero)

$$G_{UM} = 10 \log \frac{|s_{fe}|^2}{[1-|s_{ie}|^2]\,[1-|s_{oe}|^2]}$$

$I_C = 30$ mA; $V_{CE} = 8$ V; $T_{amb} = 25$ °C: f = 800 MHz f = 2 GHz	G_{UM}	typ. typ.	17,0 9,0	dB dB
Noise figure at f = 800 MHz and $T_{amb} = 25$ °C $I_C = 4$ mA; $V_{CE} = 8$ V; Z_S = opt.	F	typ.	1,6	dB

s-parameters (common emitter) at V_{CE} = 5 V; T_{amb} = 25 °C; typical values

I_C mA	f MHz	s_{ie}	s_{fe}	s_{re}	s_{oe}	G_{UM} dB
2	40	0,93/ −10,4°	7,1/174,6°	0,02/ 84,9°	1,00/ −3,3°	52,9
	100	0,93/ −30,9°	7,0/160,6°	0,03/ 73,5°	1,00/ −11,9°	52,8
	200	0,83/ −58,3°	6,0/144,6°	0,06/ 60,4°	0,88/ −22,1°	27,2
	500	0,74/−115,5°	4,2/110,2°	0,10/ 36,5°	0,71/ −40,3°	18,9
	800	0,67/−144,9°	2,9/ 92,5°	0,11/ 29,0°	0,61/ −51,6°	13,9
	1000	0,65/−161,0°	2,4/ 81,5°	0,11/ 25,2°	0,60/ −55,8°	12,0
	1200	0,64/−175,0°	2,0/ 73,9°	0,10/ 25,2°	0,58/ −62,7°	9,9
	1500	0,64/+171,3°	1,7/ 64,5°	0,11/ 28,1°	0,52/ −72,1°	8,1
	2000	0,63/+148,8°	1,2/ 49,6°	0,10/ 35,4°	0,52/ −90,7°	5,5
5	40	0,86/ −17,1°	16,2/171,0°	0,01/ 81,2°	0,99/ −7,5°	46,5
	100	0,83/ −46,6°	15,2/152,3°	0,03/ 66,6°	0,92/ −21,4°	36,9
	200	0,72/ −82,0°	11,6/133,0°	0,05/ 53,3°	0,73/ −34,7°	27,8
	500	0,63/−140,5°	6,5/101,0°	0,07/ 38,0°	0,48/ −52,8°	19,6
	800	0,60/−164,4°	4,3/ 87,0°	0,08/ 39,2°	0,41/ −61,7°	15,4
	1000	0,59/−177,4°	3,5/ 78,3°	0,08/ 39,9°	0,39/ −64,2°	13,4
	1200	0,59/+170,7°	2,9/ 72,9°	0,09/ 43,3°	0,37/ −69,0°	11,6
	1500	0,58/+160,8°	2,4/ 64,2°	0,10/ 46,6°	0,34/ −79,5°	9,9
	2000	0,58/+140,3°	1,8/ 51,8°	0,11/ 51,4°	0,35/ −95,8°	7,4
10	40	0,78/ −25,7°	27,2/166,2°	0,01/ 78,4°	0,97/ −12,5°	44,5
	100	0,72/ −64,9°	23,2/143,3°	0,03/ 61,1°	0,83/ −31,4°	35,5
	200	0,62/−105,0°	16,2/123,2°	0,04/ 50,0°	0,59/ −45,9°	28,1
	500	0,59/−155,7°	7,9/ 95,5°	0,05/ 44,9°	0,34/ −63,2°	20,3
	800	0,56/−175,9°	5,1/ 83,5°	0,07/ 50,4°	0,29/ −70,7°	16,2
	1000	0,57/+173,2°	4,1/ 76,3°	0,07/ 52,3°	0,27/ −72,7°	14,3
	1200	0,58/+162,5°	3,4/ 72,1°	0,08/ 55,6°	0,25/ −76,2°	12,5
	1500	0,56/+154,8°	2,8/ 63,8°	0,10/ 56,6°	0,25/ −88,2°	10,8
	2000	0,56/+135,3°	2,1/ 52,8°	0,13/ 58,5°	0,26/−102,7°	8,4
20	40	0,65/ −39,4°	42,2/159,3°	0,01/ 72,3°	0,91/ −19,7°	42,7
	100	0,60/ −89,5°	31,6/132,8°	0,02/ 55,5°	0,69/ −42,9°	34,8
	200	0,55/−129,0°	19,7/114,0°	0,02/ 50,4°	0,44/ −57,0°	28,4
	500	0,57/−168,3°	8,8/ 91,5°	0,04/ 54,8°	0,24/ −74,1°	20,8
	800	0,55/+175,7°	5,6/ 81,0°	0,06/ 60,5°	0,21/ −80,3°	16,8
	1000	0,55/+166,5°	4,5/ 74,8°	0,07/ 61,7°	0,19/ −82,5°	14,8
	1200	0,57/+156,9°	3,7/ 71,1°	0,08/ 64,0°	0,17/ −85,5°	13,2
	1500	0,54/+150,5°	3,1/ 63,0°	0,10/ 63,0°	0,18/−130,7°	11,4
	2000	0,55/+131,8°	2,3/ 53,3°	0,13/ 62,3°	0,20/−111,3°	9,0
30	40	0,58/ −50,3°	50,7/154,7°	0,01/ 69,7°	0,87/ −24,2°	42,2
	100	0,56/−104,9°	35,1/127,1°	0,02/ 53,8°	0,61/ −48,7°	34,5
	200	0,54/−141,0°	20,7/109,8°	0,02/ 52,4°	0,37/ −61,2°	28,4
	500	0,56/−173,6°	8,9/ 89,5°	0,04/ 60,0°	0,20/ −77,6°	20,8
	800	0,55/+172,3°	5,7/ 79,7°	0,06/ 64,8°	0,18/ −83,1°	16,9
	1000	0,56/+164,0°	4,5/ 73,8°	0,07/ 65,3°	0,17/ −85,3°	14,9
	1200	0,58/+154,8°	3,7/ 70,6°	0,08/ 67,1°	0,15/ −88,3°	13,3
	1500	0,55/+148,9°	3,1/ 62,5°	0,10/ 65,2°	0,16/−100,8°	11,5
	2000	0,55/+130,5°	2,3/ 53,0°	0,13/ 63,7°	0,18/−114,1°	9,1

s-parameters (common-emitter) at V_{CE} = 8 V; T_{amb} = 25 °C; typical values

I_C mA	f MHz	s_{ie}	s_{fe}	s_{re}	s_{oe}	G_{UM} dB
2	40	0,94/ −9,9°	7,1/174,8°	0,01/ 84,5°	1,00/ −2,8°	53,5
	100	0,94/ −30,0°	7,0/161,3°	0,03/ 73,7°	1,00/ −11,0°	53,4
	200	0,83/ −56,5°	6,1/145,5°	0,05/ 61,5°	0,89/ −20,5°	27,7
	500	0,74/−113,2°	4,3/111,4°	0,09/ 37,8°	0,73/ −37,8°	19,4
	800	0,66/−142,9°	3,0/ 93,7°	0,10/ 30,8°	0,63/ −48,7°	14,3
	1000	0,64/−159,0°	2,5/ 82,5°	0,10/ 27,0°	0,62/ −52,8°	12,4
	1200	0,63/−173,3°	2,0/ 74,6°	0,10/ 26,9°	0,61/ −59,6°	10,3
	1500	0,62/+172,7°	1,7/ 65,5°	0,10/ 29,8°	0,54/ −68,5°	8,3
	2000	0,63/+149,9°	1,3/ 50,5°	0,10/ 37,8°	0,54/ −87,0°	5,7
5	40	0,87/ −15,9°	15,9/171,6°	0,01/ 81,6°	0,99/ −6,5°	46,7
	100	0,84/ −43,8°	14,8/153,5°	0,03/ 68,2°	0,93/ −19,3°	37,7
	200	0,72/ −78,0°	11,6/134,5°	0,05/ 54,8°	0,76/ −31,6°	28,3
	500	0,63/−136,7°	6,7/102,2°	0,07/ 38,8°	0,52/ −48,3°	20,0
	800	0,59/−161,4°	4,4/ 87,9°	0,08/ 40,0°	0,44/ −56,7°	15,7
	1000	0,58/−174,8°	3,6/ 79,0°	0,08/ 40,8°	0,43/ −59,3°	13,7
	1200	0,58/+172,8°	2,9/ 73,4°	0,08/ 44,0°	0,41/ −63,9°	11,9
	1500	0,57/+162,6°	2,5/ 64,9°	0,09/ 47,2°	0,37/ −73,9°	10,1
	2000	0,57/+141,9°	1,8/ 52,3°	0,11/ 52,4°	0,38/ −90,2°	7,6
10	40	0,80/ −23,3°	26,3/167,2°	0,01/ 78,3°	0,97/ −11,0°	44,6
	100	0,74/ −60,0°	22,9/145,1°	0,03/ 62,7°	0,85/ −28,1°	36,3
	200	0,62/ −99,1°	16,2/125,0°	0,04/ 50,9°	0,62/ −41,6°	28,4
	500	0,58/−151,7°	8,1/ 96,7°	0,05/ 45,4°	0,38/ −56,3°	20,6
	800	0,55/−172,9°	5,3/ 84,4°	0,06/ 50,5°	0,32/ −63,4°	16,5
	1000	0,55/+175,8°	4,2/ 77,0°	0,07/ 52,3°	0,31/ −64,9°	14,5
	1200	0,56/+164,5°	3,5/ 72,4°	0,08/ 55,1°	0,29/ −68,2°	12,8
	1500	0,54/+156,7°	2,9/ 64,3°	0,10/ 56,6°	0,28/ −79,7°	11,1
	2000	0,54/+136,8°	2,1/ 53,1°	0,12/ 58,5°	0,28/ −94,3°	8,6
20	40	0,70/ −35,0°	41,2/160,7°	0,01/ 75,1°	0,92/ −17,3°	43,5
	100	0,63/ −82,0°	31,7/134,8°	0,02/ 57,6°	0,72/ −38,6°	35,4
	200	0,55/−122,2°	20,2/115,6°	0,03/ 50,9°	0,47/ −51,0°	28,7
	500	0,55/−164,6°	9,1/ 92,2°	0,04/ 54,4°	0,27/ −63,8°	21,0
	800	0,53/+178,4°	5,8/ 81,6°	0,06/ 60,2°	0,24/ −69,5°	17,0
	1000	0,54/+168,8°	4,6/ 75,3°	0,07/ 61,3°	0,22/ −70,7°	15,0
	1200	0,55/+158,7°	3,8/ 71,4°	0,08/ 63,4°	0,20/ −72,9°	13,4
	1500	0,52/+152,5°	3,2/ 63,5°	0,10/ 63,0°	0,21/ −85,9°	11,6
	2000	0,53/+133,3°	2,4/ 53,4°	0,13/ 62,3°	0,22/ −99,5°	9,2
30	40	0,65/ −42,9°	49,0/156,7°	0,01/ 72,7°	0,89/ −20,9°	43,0
	100	0,58/ −94,4°	35,1/129,5°	0,02/ 54,7°	0,65/ −43,2°	35,0
	200	0,53/−132,8°	21,1/111,5°	0,03/ 51,8°	0,40/ −53,7°	28,7
	500	0,54/−169,5°	9,2/ 90,5°	0,04/ 58,8°	0,23/ −64,8°	21,1
	800	0,52/+175,3°	5,9/ 80,5°	0,06/ 63,6°	0,21/ −70,2°	17,0
	1000	0,53/+166,4°	4,7/ 74,3°	0,07/ 64,6°	0,20/ −71,4°	15,1
	1200	0,55/+156,8°	3,9/ 70,8°	0,08/ 66,1°	0,18/ −73,2°	13,4
	1500	0,52/+150,9°	3,2/ 63,0°	0,10/ 64,8°	0,19/ −87,3°	11,7
	2000	0,53/+132,2°	2,4/ 53,0°	0,13/ 63,5°	0,20/−100,8°	9,0

N-P-N 2 GHz WIDEBAND TRANSISTOR

N-P-N transistor in a four-lead dual-emitter plastic envelope (SOT-103). This device is designed for application in wideband amplifiers, such as CATV and MATV systems, up to 2 GHz.

P-N-P complement is BFG32.

QUICK REFERENCE DATA

Collector-base voltage (open emitter)	V_{CBO}	max.	20 V	
Collector-emitter voltage (open base)	V_{CEO}	max.	15 V	
Collector current (d.c.)	I_C	max.	75 mA	←
Total power dissipation up to T_{amb} = 70 °C	P_{tot}	max.	700 mW	
Junction temperature	T_j	max.	175 °C	
D.C. current gain I_C = 50 mA; V_{CE} = 10 V	h_{FE}	min.	25	
Transition frequency at f = 500 MHz I_C = 50 mA; V_{CE} = 10 V	f_T	typ.	5,0 GHz	
Feedback capacitance at f = 1 MHz I_C = 0; V_{CE} = 10 V	C_{re}	typ.	1,0 pF	
Maximum unilateral power gain at f = 800 MHz I_C = 50 mA; V_{CE} = 10 V	G_{UM}	typ.	15,0 dB	
Output power at 1 dB gain compression V_{CE} = 10 V; I_C = 70 mA; f = 800 MHz	P_{L1}	typ.	+21 dBm	
Third order intercept point V_{CE} = 10 V; I_C = 70 mA; f = 800 MHz	ITO	typ.	+40 dBm	

MECHANICAL DATA

SOT-103 (see Fig. 1).

MECHANICAL DATA

Dimensions in mm

Fig. 1 SOT-103.

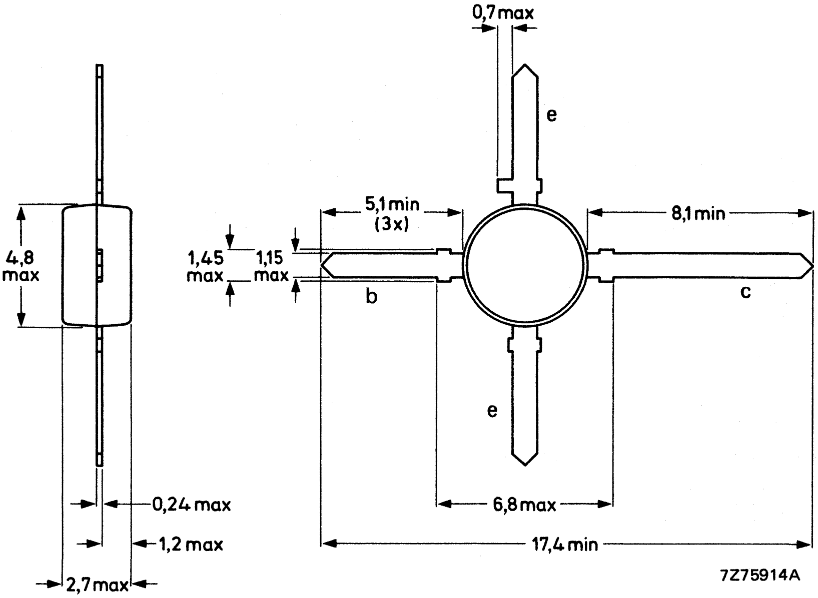

RATINGS

Limiting values in accordance with the Absolute Maximum System (IEC 134)

Collector-base voltage (open emitter)	V_{CBO}	max.	20	V
Collector-emitter voltage (open base)	V_{CEO}	max.	15	V
Emitter-base voltage (open collector)	V_{EBO}	max.	3	V
→ Collector current (d.c.)	I_C	max.	75	mA
Total power dissipation up to T_{amb} = 70 °C mounted on a p.c. board (see Fig. 2)	P_{tot}	max.	700	mW
Storage temperature	T_{stg}		−65 to +175	°C
Junction temperature	T_j	max.	175	°C

THERMAL RESISTANCE

From junction to ambient in free air mounted on glass-fibre p.c.b. (see Fig. 2)	$R_{th\ j\text{-}a}$	=	150 K/W
From junction to case	$R_{th\ j\text{-}c}$	=	75 K/W

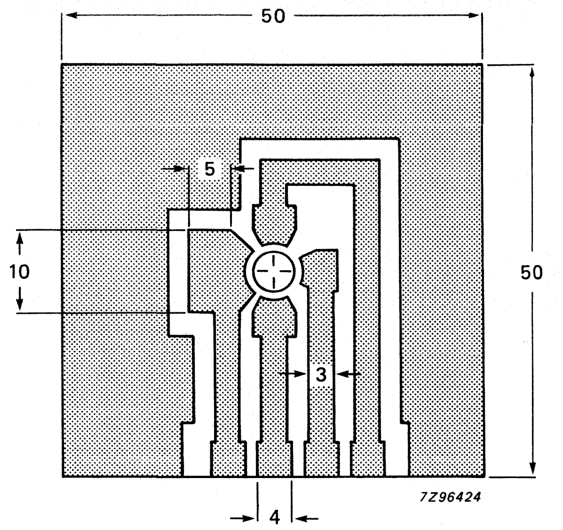

Fig. 2 Requirements for fibre-glass print (dimensions in mm). Single-sided 35 μm Cu-clad epoxy fibre-glass print, thickness 1,5 mm. Tracks are fully tin-lead plated. Shaded area is Cu.

CHARACTERISTICS

T_j = 25 °C unless otherwise specified

Collector cut-off current $I_E = 0$; $V_{CB} = 10$ V	I_{CBO}	max.	100 nA
D.C. current gain $I_C = 50$ mA; $V_{CE} = 10$ V	h_{FE}	min. typ.	25 50
Transition frequency at f = 500 MHz $I_C = 50$ mA; $V_{CE} = 10$ V	f_T	typ.	5,0 GHz
Collector capacitance at f = 1 MHz $I_E = i_e = 0$; $V_{CB} = 10$ V	C_c	typ.	1,5 pF
Emitter capacitance at f = 1 MHz $I_C = i_c = 0$; $V_{EB} = 0{,}5$ V	C_e	typ.	6,5 pF
Feedback capacitance at f = 1 MHz $I_C = 0$; $V_{CE} = 10$ V	C_{re}	typ.	1,0 pF
Noise figure at Z_S = opt. and T_{amb} = 25 °C $I_C = 70$ mA; $V_{CE} = 10$ V; f = 800 MHz	F	typ.	4,0 dB

Maximum unilateral power gain (s_{re} assumed to be zero)

$$G_{UM} = 10 \log \frac{|s_{fe}|^2}{[1-|s_{ie}|^2]\,[1-|s_{oe}|^2]}$$

$I_C = 50$ mA; $V_{CE} = 10$ V; f = 800 MHz; T_{amb} = 25 °C	G_{UM}	typ.	15,0 dB
$I_C = 50$ mA; $V_{CE} = 10$ V; f = 2 GHz; T_{amb} = 25 °C		typ.	8,0 dB

Output power at 1 dB gain compression $I_C = 70$ mA; $V_{CE} = 10$ V; $T_{amb} = 25\ ^oC$; $R_L = 75\ \Omega$; measured at f = 800 MHz	P_{L1}	typ.	+21 dBm
Third order intercept point (see Fig. 3) $I_C = 70$ mA; $V_{CE} = 10$ V; $R_L = 75\ \Omega$; $T_{amb} = 25\ ^oC$; P_p = ITO − 6 dB; f_p = 800 MHz; P_q = ITO − 6 dB; f_q = 801 MHz; measured at $f_{(2q-p)}$ = 802 MHz and at $f_{(2p-q)}$ = 799 MHz	ITO	typ.	+40 dBm
Output voltage at $d_{im} = -60$ dB $I_C = 70$ mA; $V_{CE} = 10$ V; $R_L = 75\ \Omega$; $T_{amb} = 25\ ^oC$ $V_p = V_o$ at $d_{im} = -60$ dB ; f_p = 795,25 MHz $V_q = V_o$ −6 dB ; f_q = 803,25 MHz $V_r = V_o$ −6 dB ; f_r = 805,25 MHz measured at $f_{(p+q-r)}$ = 793,25 MHz	V_o	typ.	700 mV
Second harmonic distortion (see Fig. 3) $I_C = 70$ mA; $V_{CE} = 10$ V; $R_L = 75\ \Omega$; VSWR < 2; $T_{amb} = 25\ ^oC$ $V_p = V_o$ = 320 mV at f_p = 250 MHz $V_q = V_o$ = 320 mV at f_q = 560 MHz measured at $f_{(p+q)}$ = 810 MHz	d_2	typ.	−52 dB

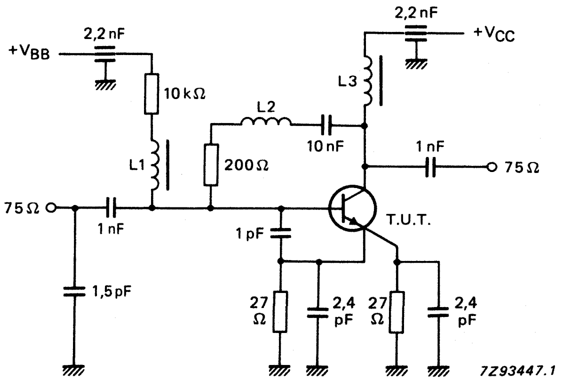

Fig. 3 Intermodulation distortion and second harmonic distortion MATV test circuit.

L1 = L3 = 5 μH micro-choke

L2 = 1,5 turns Cu wire (0,4 mm), internal diameter 3 mm, winding pitch 1 mm.

s-parameters (common emitter) at V_{CE} = 10 V; T_{amb} = 25 °C; typical values

I_C mA	f MHz	s_{ie}	s_{fe}	s_{re}	s_{oe}	G_{UM} dB
10	40	0,68/−50,8°	26,0/155,5°	0,02/67,1°	0,90/−22,7°	38,2
	100	0,68/−106,4°	18,2/126,5°	0,03/46,0°	0,65/−45,7°	30,3
	200	0,68/−142,5°	10,8/107,9°	0,04/38,0°	0,41/−56,9°	24,1
	500	0,71/−173,4°	4,6/84,5°	0,05/41,2°	0,25/−69,3°	16,6
	800	0,69/+173,9°	3,0/73,3°	0,07/49,3°	0,25/−78,7°	12,7
	1000	0,70/+166,7°	2,4/65,8°	0,08/52,5°	0,25/−82,7°	10,8
	1200	0,72/+159,6°	1,9/61,5°	0,09/56,9°	0,24/−91,4°	9,3
	1500	0,71/+153,2°	1,7/53,2°	0,11/60,2°	0,25/−103,8°	7,7
	2000	0,73/+138,2°	1,2/42,7°	0,14/63,2°	0,29/−126,1°	5,5
15	40	0,60/−64,1°	33,5/150,8°	0,02/64,6°	0,86/−29,5°	28,4
	100	0,65/−121,2°	21,8/121,5°	0,03/45,0°	0,56/−56,5°	30,8
	200	0,66/−152,0°	12,4/104,8°	0,03/40,9°	0,33/−70,6°	24,9
	500	0,70/−177,4°	5,1/83,8°	0,05/49,3°	0,19/−90,4°	17,3
	800	0,68/+171,4°	3,3/73,5°	0,07/56,4°	0,19/−98,2°	13,4
	1000	0,69/+164,8°	2,6/66,7°	0,08/58,4°	0,18/−102,4°	11,5
	1200	0,72/+157,8°	2,2/62,8°	0,09/61,7°	0,17/−110,5°	10,0
	1500	0,70/+152,1°	1,8/54,6°	0,12/63,1°	0,20/−121,3°	8,4
	2000	0,72/+137,2°	1,4/44,7°	0,15/64,1°	0,23/−139,8°	6,3
20	40	0,55/−75,5°	39,4/147,3°	0,02/60,6°	0,83/−34,8°	38,6
	100	0,63/−130,6°	24,0/118,3°	0,02/43,9°	0,51/−64,8°	31,1
	200	0,66/−156,7°	13,3/102,8°	0,03/44,2°	0,29/−82,0°	25,3
	500	0,70/−179,7°	5,4/83,5°	0,05/54,3°	0,17/−108,8°	17,7
	800	0,68/+170,0°	3,5/73,7°	0,07/60,3°	0,17/−115,6°	13,9
	1000	0,69/+163,7°	2,8/67,0°	0,08/61,3°	0,16/−119,4°	11,9
	1200	0,72/+156,9°	2,3/63,5°	0,09/64,0°	0,15/−129,7°	10,5
	1500	0,69/+151,5°	2,0/55,5°	0,12/64,3°	0,18/−136,5°	8,8
	2000	0,71/+136,7°	1,5/45,9°	0,16/63,9°	0,21/−152,0°	6,7
30	40	0,51/−92,9°	47,3/142,3°	0,02/58,4°	0,79/−42,7°	38,8
	100	0,62/−142,5°	26,5/114,3°	0,02/44,5°	0,44/−76,6°	31,5
	200	0,65/−162,4°	14,4/100,6°	0,03/49,2°	0,25/−98,8°	25,9
	500	0,69/+177,9°	5,8/83,0°	0,05/60,3°	0,17/−132,5°	18,2
	800	0,68/+168,5°	3,8/73,8°	0,07/64,7°	0,17/−136,9°	14,3
	1000	0,69/+162,5°	3,0/67,5°	0,08/64,7°	0,16/−143,7°	12,4
	1200	0,71/+155,8°	2,4/64,4°	0,10/66,4°	0,15/−155,4°	10,9
	1500	0,68/+150,8°	2,1/56,3°	0,12/65,7°	0,18/−156,5°	9,3
	2000	0,71/+136,2°	1,6/47,2°	0,16/64,4°	0,21/−168,4°	7,3
50	40	0,49/−113,0°	55,6/136,3°	0,01/57,1°	0,71/−52,4°	39,1
	100	0,63/−153,5°	28,5/110,2°	0,02/48,7°	0,39/−90,8°	32,0
	200	0,65/−168,7°	15,3/98,3°	0,02/56,7°	0,24/−117,4°	26,3
	500	0,69/+175,9°	6,0/82,4°	0,05/65,8°	0,20/−149,7°	18,6
	800	0,67/+167,2°	3,9/73,6°	0,07/68,1°	0,19/−154,7°	15,0
	1000	0,69/+161,5°	3,1/67,7°	0,09/67,2°	0,18/−162,2°	12,8
	1200	0,71/+155,1°	2,6/65,0°	0,10/68,7°	0,18/−173,8°	11,3
	1500	0,68/+150,3°	2,2/56,9°	0,13/66,7°	0,19/−172,1°	9,7
	2000	0,70/+135,7°	1,7/48,3°	0,17/64,9°	0,21/−177,2°	8,0

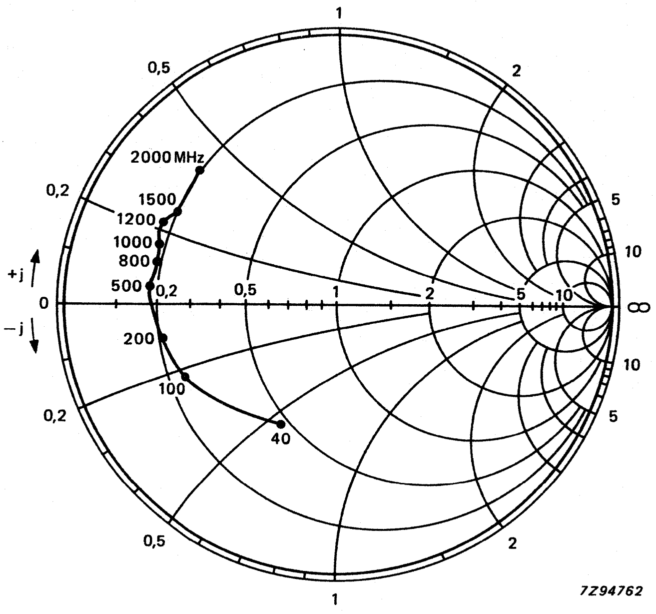

Fig. 4 Input impedance, derived from input reflection coefficient s_{ie} coordinates, in ohm x 50.

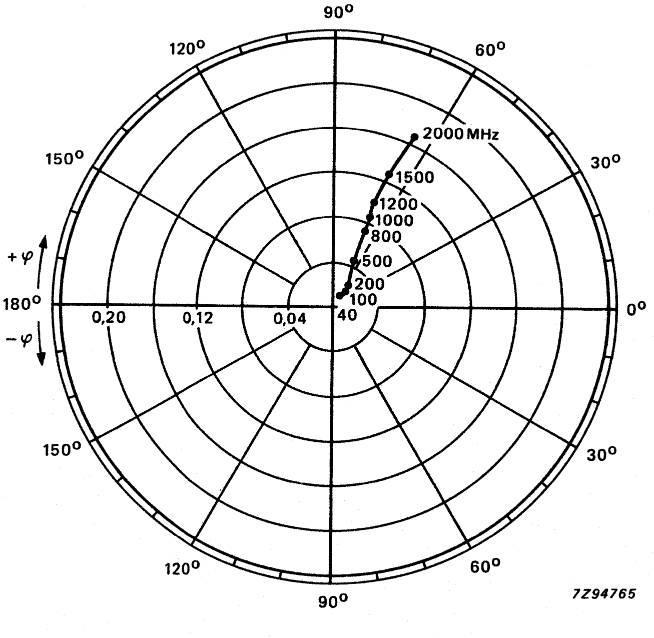

Fig. 5 Reverse transmission coefficient s_{re}.

Conditions for Figs 4 to 7: V_{CE} = 10 V; I_C = 50 mA; T_{amb} = 25 °C.

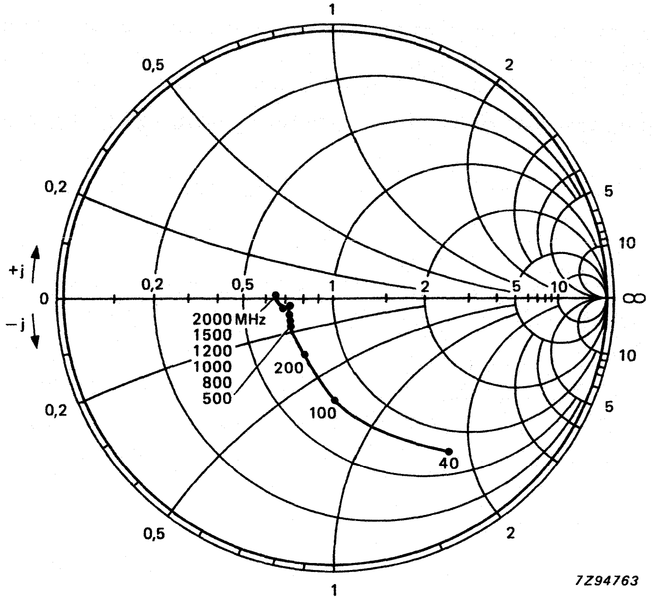

Fig. 6 Ouput impedance, derived from output reflection coefficient s_{oe} coordinates, in ohm x 50.

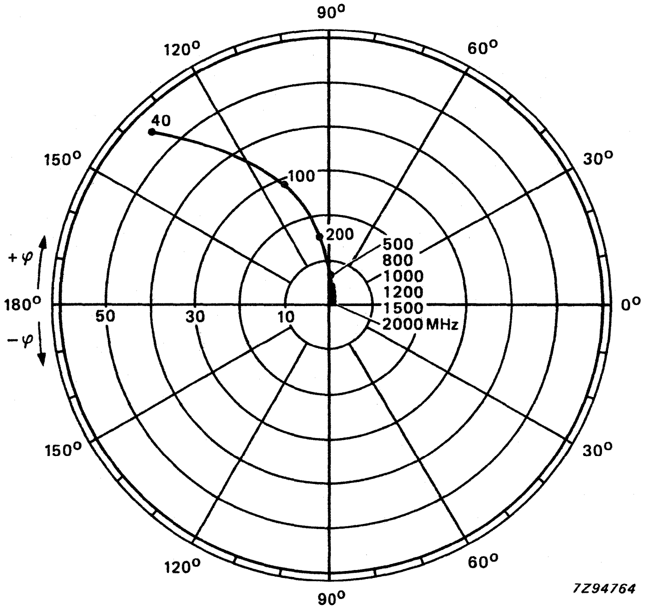

Fig. 7 Forward transmission coefficient s_{fe}.

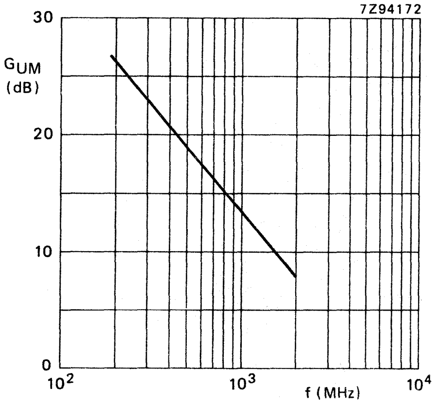

→ Fig. 8 V_{CE} = 10 V; I_C = 50 mA; T_{amb} = 25 °C; typical values.

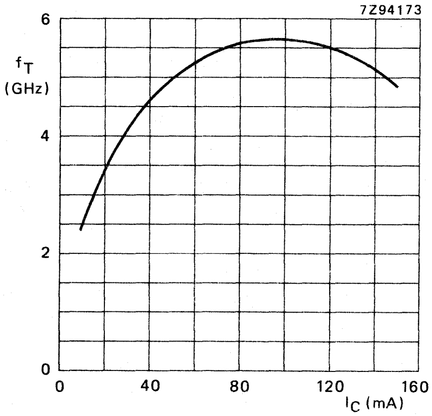

Fig. 9 V_{CE} = 10 V; f = 500 MHz; T_j = 25 °C; typical values.

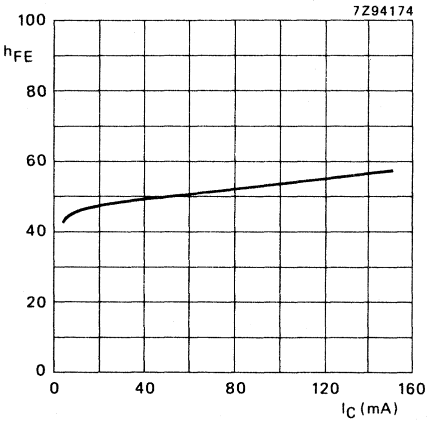

→ Fig. 10 V_{CE} = 10 V; T_j = 25 °C; typical values.

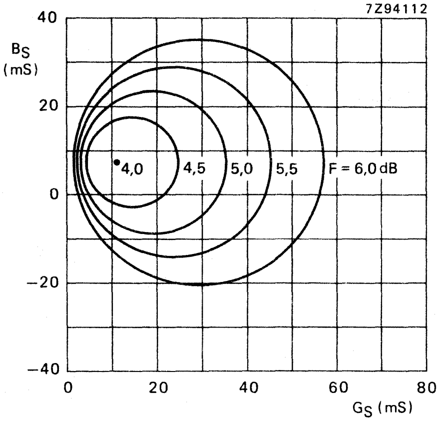

Fig. 11 Circles of constant noise figure I_C = 70 mA; V_{CE} = 10 V; f = 800 MHz; typical values.

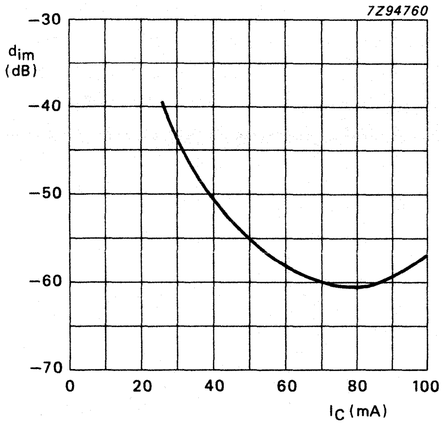

Fig. 12 V_{CE} = 10 V; V_o = 700 mV; $f_{(p+q-r)}$ = 793,25 MHz; T_{amb} = 25 °C; typical values.

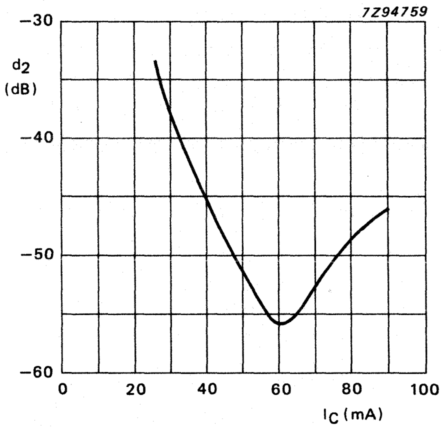

Fig. 13 V_{CE} = 10 V; V_o = 320 mV; $f_{(p+q)}$ = 810 MHz; T_{amb} = 25 °C; typical values.

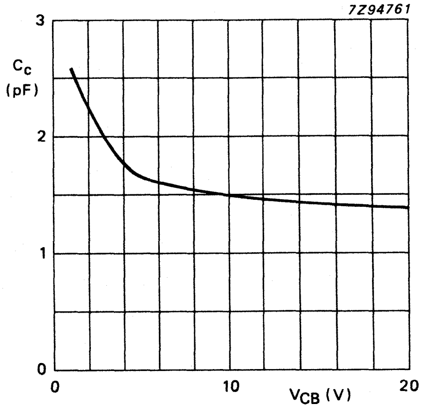

Fig. 14 $I_E = i_e = 0$; f = 1 MHz; T_j = 25 °C; typical values.

CLASS-B OPERATION

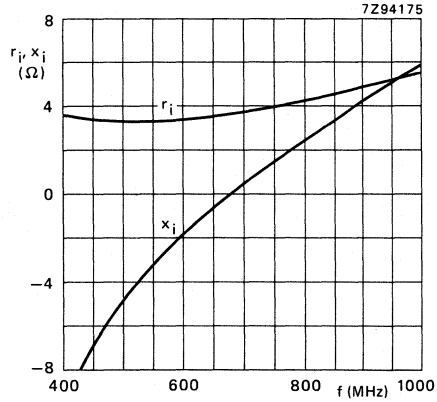

Fig. 15 Input impedance (series components).

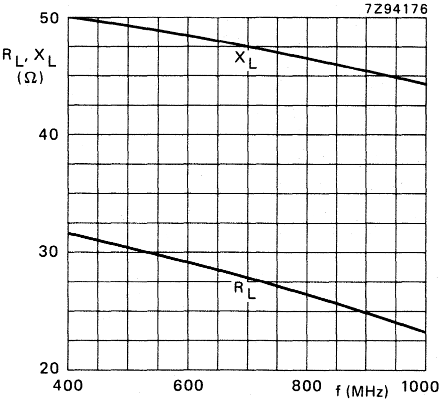

Fig. 16 Load impedance (series components).

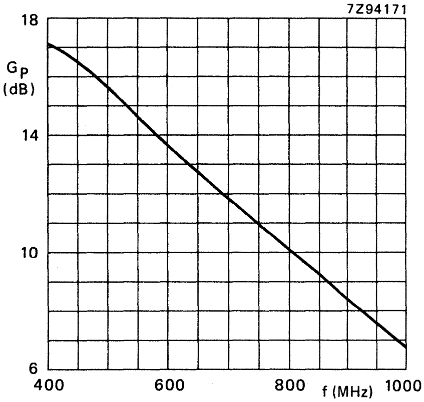

Fig. 17 Power gain versus frequency.

Conditions for Figs 15 to 17:

$V_{CE} = 10$ V; $P_L = 500$ mW; $T_{amb} = 25$ °C; typical values.

OPERATING NOTE for Figs 15 to 17:

A resistance of 39 Ω between base and emitter is recommended to avoid oscillation. This resistance must be effective for r.f. only.

N-P-N 2 GHz WIDEBAND TRANSISTOR

N-P-N transistor in a four-lead dual-emitter plastic envelope (SOT-103). It is designed for wideband application in the GHz range, such as satellite TV systems (SATV) and repeater amplifiers in fibre-optical systems. The device features a very high transition frequency, high gain and a very low noise figure up to high frequencies.

QUICK REFERENCE DATA

Collector-base voltage (open emitter)	V_{CBO}	max.	20	V
Collector-emitter voltage (open base)	V_{CEO}	max.	10	V
Collector current (d.c.)	I_C	max.	100	mA
Total power dissipation up to T_{amb} = 50 °C	P_{tot}	max.	500	mW
Junction temperature	T_j	max.	150	°C
D.C. current gain I_C = 50 mA, V_{CE} = 5 V	h_{FE}	min.	40	
Transition frequency at f = 2 GHz I_C = 50 mA; V_{CE} = 8 V	f_T	typ.	7,5	GHz
Maximum unilateral power gain at f = 2 GHz I_C = 50 mA; V_{CE} = 8 V	G_{UM}	typ.	11,0	dB

MECHANICAL DATA

Dimensions in mm

Fig. 1 SOT-103.

Lead reference:

1 = emitter
2 = collector
3 = emitter
4 = base

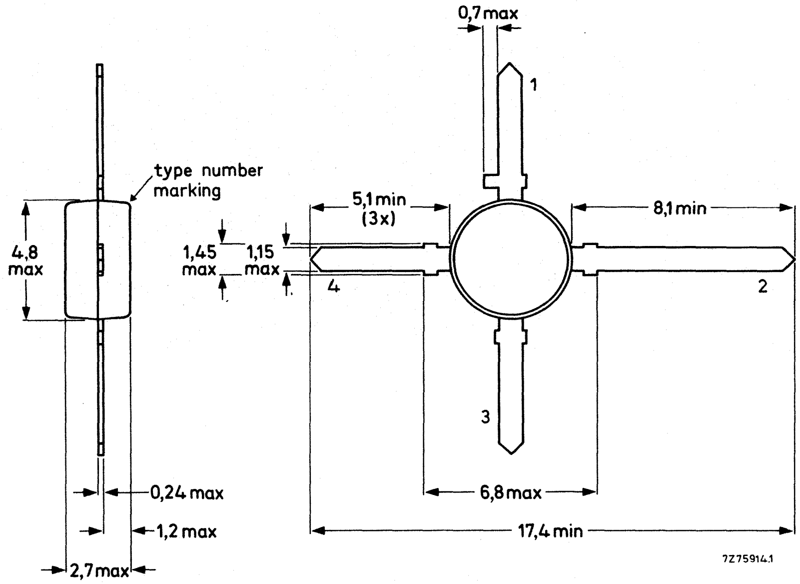

RATINGS

Limiting values in accordance with the Absolute Maximum System (IEC 134)

Collector-base voltage (open emitter)	V_{CBO}	max.	20	V
Collector-emitter voltage (open base)	V_{CEO}	max.	10	V
Emitter-base voltage (open collector)	V_{EBO}	max.	2,5	V
Collector current (d.c.)	I_C	max.	100	mA
Total power dissipation up to T_{amb} = 50 °C*	P_{tot}	max.	500	mW
Storage temperature	T_{stg}		−65 to +150	°C
Junction temperature	T_j	max.	150	°C

THERMAL RESISTANCE

From junction to ambient*	$R_{th\ j\text{-}a}$	=	200	K/W

CHARACTERISTICS

T_j = 25 °C unless otherwise specified

Collector cut-off current $I_E = 0$; $V_{CB} = 5$ V	I_{CBO}	max.	100	nA
D.C. current gain $I_C = 50$ mA; $V_{CE} = 5$ V	h_{FE}	min.	40	
Transition frequency at f = 2 GHz $I_C = 50$ mA; $V_{CE} = 8$ V	f_T	typ.	7,5	GHz
Collector capacitance at f = 1 MHz $I_E = i_e = 0$; $V_{CB} = 8$ V	C_c	typ.	1,5	pF
Emitter capacitance at f = 1 MHz $I_C = i_c = 0$; $V_{EB} = 0{,}5$ V	C_e	typ.	3,3	pF
Feedback capacitance at f = 1 MHz $I_C = 0$; $V_{CE} = 8$ V	C_{re}	typ.	0,85	pF

Maximum unilateral power gain (s_{re} assumed to be zero)

$$G_{UM}\ \text{(in dB)} = 10\log\frac{|s_{fe}|^2}{[1-|s_{ie}|^2]\,[1-|s_{oe}|^2]}$$

$I_C = 50$ mA; $V_{CE} = 8$ V; f = 2 GHz ; $T_{amb} = 25$ °C	G_{UM}	typ.	11,0	dB

Noise figure at optimum source impedance and
V_{CE} = 8V; f = 800 MHz; T_{amb} = 25 °C

$I_C = 15$ mA	F	typ.	1,4	dB
$I_C = 50$ mA	F	typ.	1,9	dB

---

* Mounted on a printed-circuit board of 40 mm x 25 mm x 1,5 mm.

N-P-N 2 GHz WIDEBAND TRANSISTOR

N-P-N transistor in a sub-miniature HERMETICALLY SEALED micro-stripline envelope. The BFP90A features low noise, high gain and low distortion figures.

This device is designed for v.h.f. and u.h.f. wideband amplifiers and applications in the GHz range.

P-N-P complement is BFQ51C.

QUICK REFERENCE DATA

Collector-base voltage	V_{CBO}	max.	20	V
Collector-emitter voltage	V_{CEO}	max.	15	V
Collector current (d.c.)	I_C	max.	30	mA
Total power dissipation up to T_{amb} = 125 °C	P_{tot}	max.	250	mW
Junction temperature	T_j	max.	175	°C
D.C. current gain I_C = 14 mA; V_{CE} = 10 V	h_{FE}	min. typ.	40 90	
Transition frequency at f = 500 MHz I_C = 14 mA; V_{CE} = 10 V	f_T	typ.	5,0	GHz
Maximum unilateral power gain I_C = 14 mA; V_{CE} = 10 V at f = 500 MHz at f = 800 MHz	G_{UM}	typ. typ.	23,5 19,5	dB dB

MECHANICAL DATA

Dimensions in mm

Fig. 1 SOT-173.

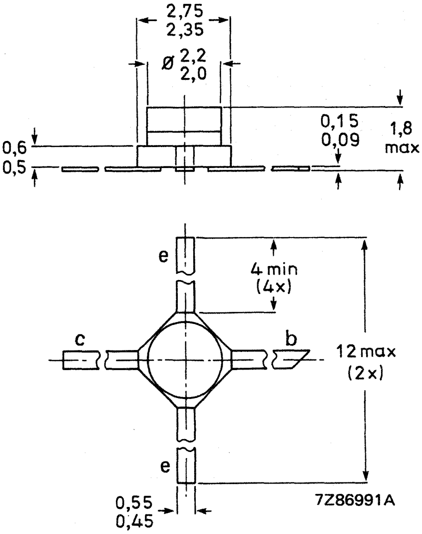

Marking code: P0

RATINGS

Limiting values in accordance with the Absolute Maximum System (IEC 134)

Collector-base voltage (open emitter)	V_{CBO}	max.	20 V
Collector-emitter voltage (open base)	V_{CEO}	max.	15 V
Emitter-base voltage (open collector)	V_{EBO}	max.	2 V
Collector current (d.c.)	I_C	max.	30 mA
Total power dissipation up to T_{amb} = 125 °C mounted on a ceramic cubstrate of 0,7 mm x 10 cm^2	P_{tot}	max.	250 mW
Storage temperature	T_{stg}	−65 to + 150 °C	
Junction temperature	T_j	max.	175 °C

THERMAL RESISTANCE

From junction to ambient in free air mounted on a ceramic substrate of 0,7 mm x 10 cm^2	$R_{th\ j\text{-}a}$	=	200 K/W

CHARACTERISTICS

T_j = 25 °C unless otherwise specified

Collector cut-off current $I_E = 0$; $V_{CB} = 10$ V	I_{CBO}	max.	50 nA
D.C. current gain $I_C = 14$ mA; $V_{CE} = 10$ V	h_{FE}	min. typ.	40 90
Transition frequency at f = 500 MHz $I_C = 14$ mA; $V_{CE} = 10$ V	f_T	typ.	5,0 GHz
Collector capacitance at f = 1 MHz $I_E = i_e = 0$; $V_{CB} = 10$ V	C_c	typ.	0,5 pF
Emitter capacitance at f = 1 MHz $I_C = i_c = 0$; $V_{EB} = 0,5$ V	C_e	typ.	1,2 pF
Feedback capacitance at f = 1 MHz $I_C = 0$; $V_{CE} = 10$ V	C_{re}	typ.	0,3 pF

Maximum unilateral power gain (s_{re} assumed to be zero)

$$G_{UM} = 10 \log \frac{|s_{fe}|^2}{[1 - |s_{ie}|^2]\ [1 - |s_{oe}|^2]}$$

at $I_C = 14$ mA; $V_{CE} = 10$ V; $T_{amb} = 25$ °C f = 500 MHz f = 800 MHz	G_{UM}	typ. typ.	23,5 dB 19,5 dB
Noise figure at f = 800 MHz; Z_S = opt.; $T_{amb} = 25$ °C $I_C = 4$ mA; $V_{CE} = 10$ V $I_C = 14$ mA; $V_{CE} = 10$ V	F	typ. typ.	1,7 dB 2,4 dB

s-parameters (common emitter) at V_{CE} = 10 V; T_{amb} = 25 °C; typical values

I_C mA	f MHz	s_{ie}	s_{fe}	s_{re}	s_{oe}	G_{UM} dB
2	40	0,89/ −8,4°	7,0/174,9°	0,006/83,5°	0,99/ −2,3°	40,7
	100	0,88/ −20,8°	6,9/167,0°	0,015/79,6°	0,98/ −5,4°	37,3
	200	0,84/ −40,7°	6,6/154,0°	0,028/70,2°	0,95/−10,2°	31,8
	500	0,72/ −87,4°	5,0/126,0°	0,053/51,7°	0,86/−19,6°	23,0
	800	0,64/−116,6°	3,7/107,3°	0,063/43,9°	0,81/−24,9°	18,3
	1000	0,59/−132,4°	3,1/ 98,1°	0,066/42,4°	0,79/−27,8°	15,9
	1200	0,56/−145,7°	2,7/ 90,6°	0,068/41,1°	0,77/−30,4°	14,2
	1500	0,55/−162,1°	2,0/ 77,6°	0,073/36,9°	0,82/−34,0°	12,5
	2000	0,54/+175,6°	1.6/ 64,3°	0,076/41,3°	0,80/−39,6°	10,2
5	40	0,78/ −12,7°	14,8/172,3°	0,006/81,4°	0,98/ −3,7°	41,5
	100	0,76/ −30,9°	14,0/160,8°	0,014/75,3°	0,96/ −8,8°	37,7
	200	0,70/ −58,3°	12,4/144,1°	0,024/64,9°	0,89/−15,1°	31,6
	500	0,58/−112,1°	7,8/114,7°	0,040/50,6°	0,74/−23,5°	23,1
	800	0,52/−138,8°	5,5/ 98,5°	0,048/50,1°	0,69/−26,4°	19,0
	1000	0,49/−153,6°	4,4/ 91,2°	0,052/51,7°	0,67/−28,5°	16,6
	1200	0,48/−163,4°	3,8/ 84,5°	0,056/53,2°	0,66/−30,5°	15,2
	1500	0,49/−178,1°	3,0/ 73,8°	0,064/50,8°	0,70/−33,9°	13,7
	2000	0,48/+162,9°	2,3/ 62,7°	0,075/56,0°	0,70/−38,8°	11,3
10	40	0,65/ −18,3°	23,5/169,2°	0,005/79,9°	0,98/ −5,4°	43,8
	100	0,63/ −43,4°	21,5/154,2°	0,012/71,9°	0,93/−12,3°	37,5
	200	0,56/ −78,1°	17,4/134,5°	0,020/61,1°	0,82/−19,0°	31,3
	500	0,49/−132,4°	9,5/107,0°	0,032/54,4°	0,65/−24,0°	23,1
	800	0,46/−154,9°	0,4/ 93,3°	0,041/58,0°	0,62/−26,1°	19,3
	1000	0,44/−167,1°	5,1/ 87,4°	0,047/60,6°	0,61/−27,6°	17,1
	1200	0,44/−174,8°	4,3/ 81,7°	0,052/62,5°	0,60/−29,7°	15,5
	1500	0,46/+171,1°	3,5/ 71,3°	0,060/60,4°	0,64/−32,7°	14,3
	2000	0,45/+154,8°	2,7/ 61,4°	0,075/63,5°	0,64/−37,6°	11,8
14	40	0,56/ −22,6°	28,1/167,9°	0,005/78,8°	0,98/ −6,3°	44,4
	100	0,54/ −53,4°	25,2/150,4°	0,011/69,5°	0,92/−14,0°	37,4
	200	0,51/ −91,1°	19,6/130,4°	0,018/59,7°	0,79/−20,8°	31,5
	500	0,47/−143,6°	10,1/103,3°	0,028/56,0°	0,63/−24,5°	23,5
	800	0,47/−164,4°	6,6/ 70,0°	0,037/59,9°	0,60/−26,0°	19,5
	1000	0,44/−174,9°	5,4/ 84,7°	0,043/62,4°	0,59/−27,5°	17,5
	1200	0,45/+177,0°	4,5/ 79,3°	0,049/64,0°	0,59/−29,4°	15,9
	1500	0,47/+167,8°	3,7/ 70,4°	0,059/62,5°	0,62/−32,4°	14,5
	2000	0,46/+152,2°	2,9/ 61,0°	0,075/64,7°	0,62/−37,5°	12,3

S-parameters (common emitter) at V_{CE} = 10 V; T_{amb} = 25 °C; typical values (continued)

I_C mA	f MHz	s_{ie}	s_{fe}	s_{re}	s_{oe}	G_{UM} dB
20	40	0,52/ −28,1°	33,9/164,9°	0,005/77,6°	0,96/ −7,5°	43,0
	100	0,50/ −64,1°	29,3/145,4°	0,011/67,4°	0,88/−15,5°	37,1
	200	0,46/−104,5°	21,0/124,4°	0,016/59,7°	0,73/−20,8°	30,8
	500	0,46/−150,2°	10,3/101,0°	0,026/61,4°	0,60/−22,1°	23,2
	800	0,44/−165,7°	6,7/ 89,7°	0,037/66,1°	0,58/−23,9°	19,2
	1000	0,44/−175,7°	5,4/ 84,2°	0,044/68,6°	0,58/−25,7°	17,4
	1200	0,44/+178,5°	4,5/ 79,6°	0,050/69,8°	0,57/−27,9°	15,7
	1500	0,46/+164,3°	3,7/ 69,2°	0,058/65,8°	0,62/−31,4°	14,4
	2000	0,46/+149,9°	2,3/ 60,3°	0,075/67,5°	0,62/−36,6°	12,2
25	40	0,48/ −33,4°	36,8/162,7°	0,005/75,8°	0,95/ −8,2°	42,6
	100	0,47/ −72,9°	30,3/141,7°	0,010/65,2°	0,85/−16,2°	36,3
	200	0,45/−113,4°	21,0/121,1°	0,015/59,1°	0,71/−20,2°	30,5
	500	0,45/−156,0°	9,9/ 99,1°	0,025/62,9°	0,60/−20,8°	22,8
	800	0,45/−170,1°	6,5/ 88,1°	0,036/67,9°	0,58/−23,1°	19,0
	1000	0,44/−179,1°	5,2/ 83,2°	0,043/69,9°	0,58/−25,0°	17,0
	1200	0,44/+175,4°	4,3/ 78,9°	0,050/71,2°	0,58/−27,4°	15,4
	1500	0,47/+162,2°	3,5/ 68,5°	0,058/67,3°	0,62/−31,2°	14,2
	2000	0,48/+148,5°	2,7/ 59,4°	0,074/68,8°	0,62/−36,6°	11,8

s-parameters (common emitter) at V_{CE} = 5 V; T_{amb} = 25 °C; typical values

I_C mA	f MHz	s_{ie}	s_{fe}	s_{re}	s_{oe}	G_{UM} dB
2	40	0,87/ −8,2°	6,7/175,5°	0,007/84,2°	1,00/ −2,4°	43,1
	100	0,86/ −20,9°	6,6/166,5°	0,016/78,8°	0,99/ −6,0°	38,7
	200	0,83/ −40,3°	6,2/154,3°	0,031/69,8°	0,96/−11,0°	32,3
	500	0,71/ −87,9°	4,6/125,4°	0,058/49,9°	0,86/−21,3°	22,3
	800	0,65/−119,8°	3,5/105,6°	0,069/40,3°	0,80/−26,6°	17,7
	1000	0,59/−134,3°	2,9/ 97,1°	0,071/37,9°	0,78/−29,6°	15,2
	1200	0,58/−148,1°	2,5/ 88,8°	0,074/36,0°	0,76/−32,2°	13,6
	1500	0,55/−163,0°	2,0/ 76,3°	0,077/35,9°	0,78/−35,0°	11,6
	2000	0,52/+174,5°	1,6/ 62,9°	0,030/40,2°	0,76/−40,5°	9,2
5	40	0,74/ −13,1°	14,5/172,7°	0,006/81,9°	0,99/ −4,1°	44,2
	100	0,72/ −32,6°	13,9/160,4°	0,015/74,7°	0,97/ −9,7°	38,0
	200	0,68/ −60,3°	12,2/143,9°	0,026/63,7°	0,90/−16,7°	31,6
	500	0,57/−115,7°	7,6/113,6°	0,043/48,2°	0,73/−25,9°	22,8
	800	0,54/−144,5°	5,3/ 96,6°	0,050/45,9°	0,67/−28,9°	18,6
	1000	0,50/−157,0°	4,3/ 90,0°	0,054/47,4°	0,65/−30,7°	16,4
	1200	0,50/−168,3°	3,7/ 83,4°	0,058/48,6°	0,64/−32,8°	14,9
	1500	0,50/+178,9°	2,9/ 72,7°	0,067/49,5°	0,67/−34,9°	13,2
	2000	0,49/+160,3°	2,2/ 61,3°	0,078/54,2°	0,66/−39,7°	10,7

s-parameters (common emitter) at V_{CE} = 5 V; T_{amb} = 25 °C; typical values (continued)

I_C mA	f MHz	s_{ie}	s_{fe}	s_{re}	s_{oe}	G_{UM} dB
10	40	0,59/ −20,3°	23,3/169,2°	0,006/79,7°	0,98/ −5,8°	43,8
	100	0,57/ −48,4°	21,4/152,9°	0,013/70,4°	0,93/−13,3°	37,0
	200	0,54/ −84,5°	17,1/133,6°	0,021/59,5°	0,81/−20,4°	30,9
	500	0,49/−139,3°	9,2/105,3°	0,032/52,2°	0,64/−25,4°	22,8
	800	0,49/−162,1°	6,1/ 91,0°	0,040/55,4°	0,60/−26,9°	18,8
	1000	0,47/−173,0°	4,9/ 85,1°	0,046/58,1°	0,59/−27,9°	16,8
	1200	0,47/+178,0°	4,1/ 79,4°	0,051/59,8°	0,59/−30,0°	15,3
	1500	0,48/+169,1°	3,4/ 70,7°	0,064/59,8°	0,61/−34,3°	13,8
	2000	0,48/+153,0°	2,6/ 60,5°	0,080/62,6°	0,60/−39,4°	11,4
14	40	0,51/ −25,7°	28,1/167,4°	0,005/78,8°	0,98/ −6,9°	43,5
	100	0,50/ −59,3°	25,0/149,1°	0,012/68,4°	0,91/−15,3°	36,6
	200	0,49/ −98,5°	19,1/128,7°	0,019/58,4°	0,77/−22,3°	30,8
	500	0,48/−149,2°	9,7/102,2°	0,029/55,2°	0,61/−25,8°	22,9
	800	0,48/−168,9°	6,3/ 89,1°	0,038/59,3°	0,57/−27,2°	18,9
	1000	0,47/−178,5°	5,1/ 83,6°	0,044/61,8°	0,57/−28,6°	16,9
	1200	0,48/+173,6°	4,3/ 78,2°	0,050/63,1°	0,56/−30,6°	15,5
	1500	0,48/+164,7°	3,5/ 69,5°	0,062/63,3°	0,60/−33,6°	13,9
	2000	0,48/+149,7°	2,7/ 59,5°	0,079/65,2°	0,59/−38,8°	11,5
20	40	0,42/ −34,0°	33,1/165,0°	0,005/77,1°	0,97/ −8,0°	43,1
	100	0,44/ −74,8°	28,2/144,4°	0,011/66,3°	0,87/−17,0°	36,2
	200	0,46/−115,0°	20,3/123,6°	0,016/57,7°	0,73/−22,8°	30,5
	500	0,48/−159,0°	9,8/ 99,1°	0,026/58,9°	0,58/−24,3°	22,8
	800	0,49/−174,7°	6,3/ 87,0°	0,036/63,8°	0,56/−26,0°	18,9
	1000	0,48/+176,5°	5,1/ 82,0°	0,042/65,9°	0,56/−27,7°	16,9
	1200	0,49/+169,6°	4,3/ 76,8°	0,049/66,9°	0,56/−30,0°	15,4
	1500	0,49/+160,6°	3,4/ 68,0°	0,061/66,8°	0,60/−32,6°	13,8
	2000	0,49/+146,6°	2,6/ 58,7°	0,079/68,4°	0,60/−38,0°	11,4
30	40	0,35/ −67,3°	33,6/155,3°	0,005/69,1°	0,91/−10,0°	38,9
	100	0,45/−116,5°	24,2/130,1°	0,010/56,5°	0,78/−16,4°	32,7
	200	0,50/−147,5°	14,8/112,3°	0,013/54,2°	0,67/−17,0°	27,3
	500	0,53/−174,4°	6,6/ 95,1°	0,022/63,7°	0,62/−18,9°	19,9
	800	0,54/+175,0°	4,3/ 85,5°	0,032/69,0°	0,61/−23,0°	16,2
	1000	0,53/+168,1°	3,5/ 81,2°	0,039/70,9°	0,61/−25,9°	14,4
	1200	0,55/+162,6°	3,0/ 76,1°	0,045/71,9°	0,61/−29,1°	13,0
	1500	0,57/+154,5°	2,4/ 67,8°	0,057/71,4°	0,64/−33,2°	11,5
	2000	0,57/+141,1°	1,8/ 58,7°	0,075/73,4°	0,64/−39,8°	9,2

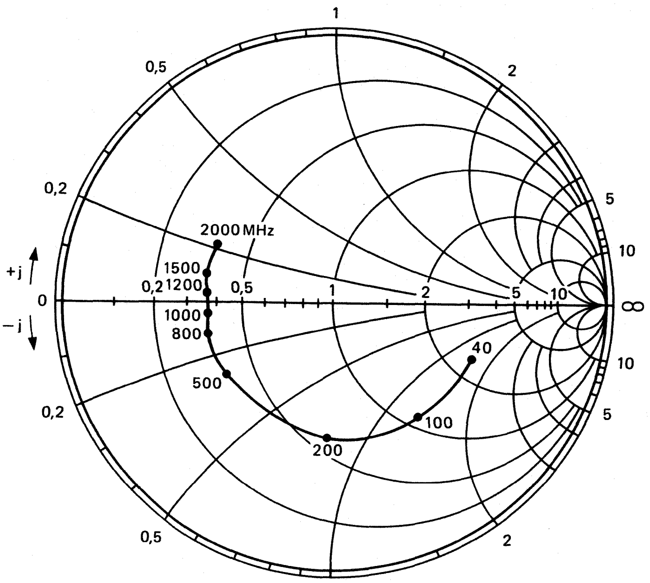

7Z92705.1

Fig. 2 Input impedance, derived from input reflection coefficient s_{ie} coordinates, in ohm x 50.

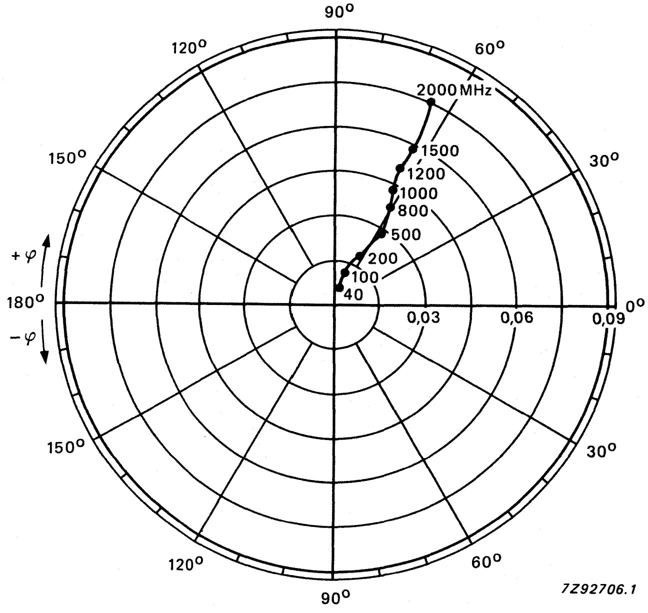

7Z92706.1

Fig. 3 Reverse transmission coefficient s_{re}.

Conditions for Figs 2 to 5: V_{CE} = 10 V; I_C = 14 mA; T_{amb} = 25 °C.

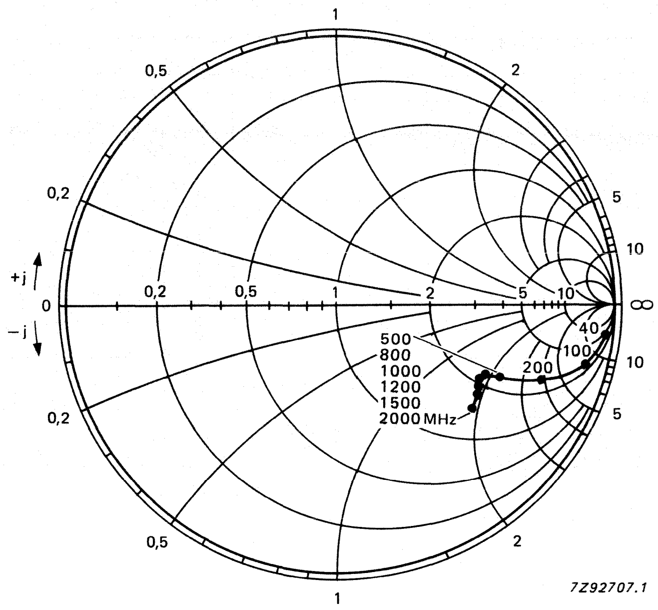

Fig. 4 Output impedance, derived from output reflection coefficient s_{oe} coordinates, in ohm x 50.

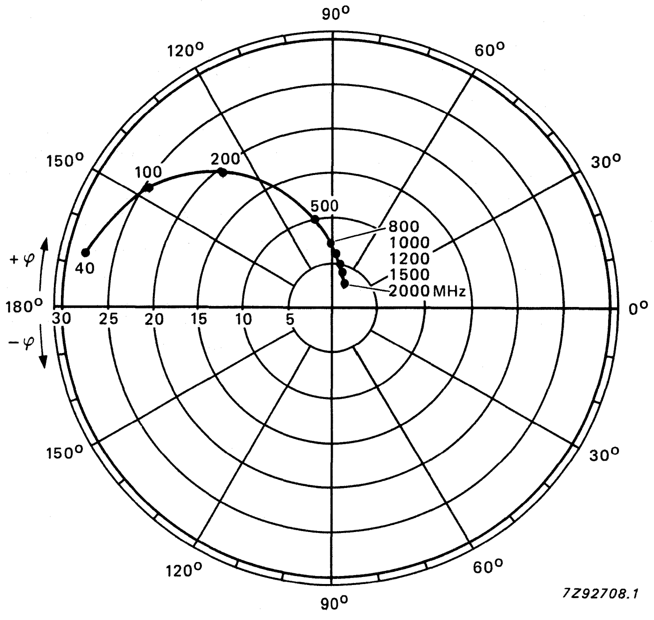

Fig. 5 Forward transmission coefficient s_{fe}.

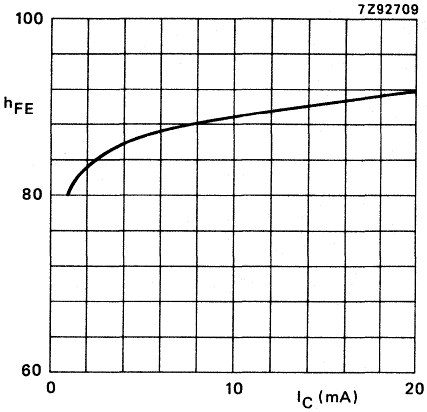

Fig. 6 V_{CE} = 10 V; T_j = 25 °C; typical values.

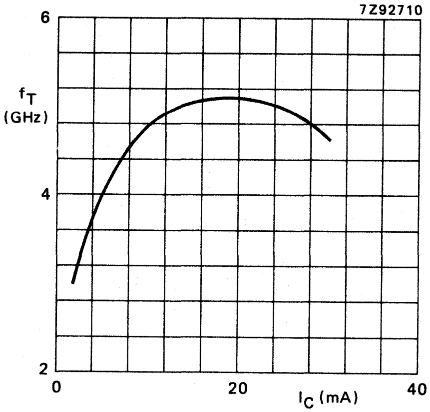

Fig. 7 V_{CE} = 10 V; f = 500 MHz; T_j = 25 °C; typical values.

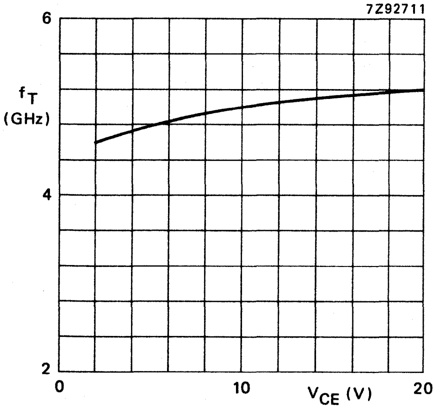

Fig. 8 I_C = 14 mA; f = 500 MHz; T_j = 25 °C; typical values.

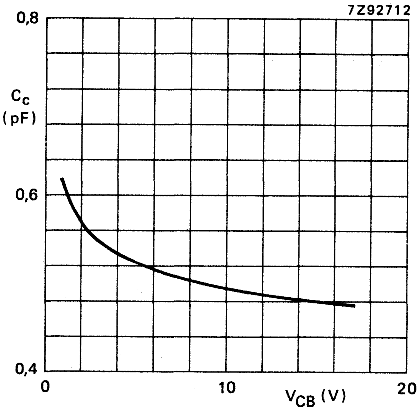

Fig. 9 I_E = i_e = 0; f = 1 MHz; T_j = 25 °C; typical values.

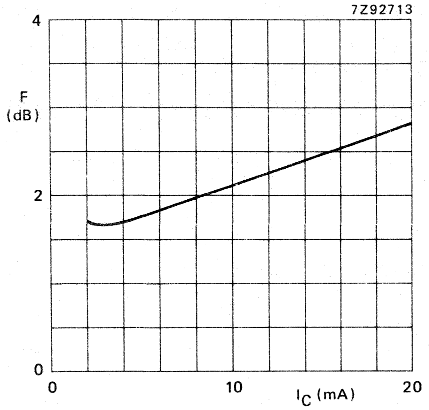

Fig. 10 V_{CE} = 10 V; f = 800 MHz; Z_S = opt.; T_{amb} = 25 ^{o}C; typical values.

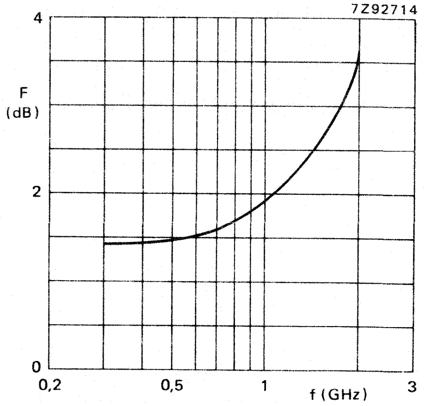

Fig. 11 V_{CE} = 10 V; I_C = 4 mA; Z_S = opt.; T_{amb} = 25 ^{o}C; typical values.

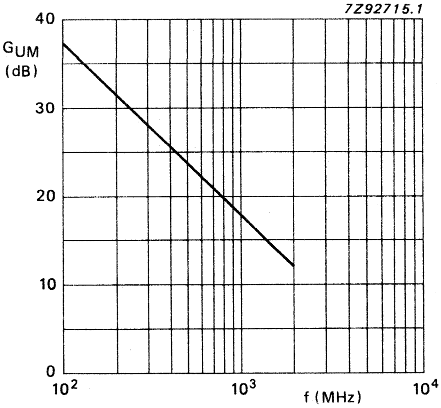

Fig. 12 V_{CE} = 10 V; I_C = 14 mA; T_{amb} = 25 ^{o}C. typical values.

N-P-N 2 GHz WIDEBAND TRANSISTOR

Gold-metallized n-p-n transistor in a sub-miniature HERMETICALLY SEALED micro-stripline envelope. The BFP91A features low noise, high gain and low distortion figures.

This device is designed for v.h.f. and u.h.f. wideband amplifiers and applications in the GHz range.

P-N-P complement is BFQ23C.

QUICK REFERENCE DATA

Collector-base voltage	V_{CBO}	max.	15	V
Collector-emitter voltage	V_{CEO}	max.	12	V
Collector current (d.c.)	I_C	max.	50	mA
Total power dissipation up to T_{amb} = 105 °C	P_{tot}	max.	350	mW
Junction temperature	T_j	max.	175	°C
D.C. current gain I_C = 30 mA; V_{CE} = 5 V	h_{FE}	min.	40	
Transition frequency at f = 500 MHz I_C = 30 mA; V_{CE} = 5 V	f_T	typ.	6,0	GHz
Maximum unilateral power gain I_C = 30 mA; V_{CE} = 8 V at f = 500 MHz	G_{UM}	typ.	22,5	dB
at f = 800 MHz		typ.	18,5	dB

MECHANICAL DATA

Dimensions in mm

Fig. 1 SOT-173.

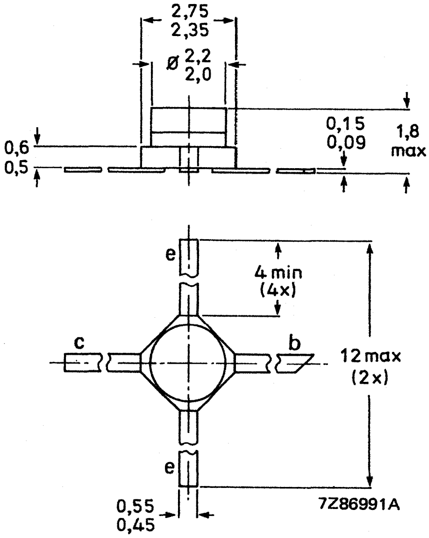

Marking code: P1

RATINGS

Limiting values in accordance with the Absolute Maximum System (IEC 134)

Collector-base voltage (open emitter)	V_{CBO}	max.	15	V
Collector-emitter voltage (open base)	V_{CEO}	max.	12	V
Emitter-base voltage (open collector)	V_{EBO}	max.	2	V
Collector current (d.c.)	I_C	max.	50	mA
Total power dissipation up to T_{amb} = 105 °C mounted on a ceramic substrate of 0,7 mm x 10 cm^2	P_{tot}	max.	350	mW
Storage temperature	T_{stg}	−65 to + 150		°C
Junction temperature	T_j	max.	175	°C

THERMAL RESISTANCE

From junction to ambient in free air mounted on a ceramic substrate of 0,7 mm x 10 cm^2	$R_{th\ j\text{-}a}$	=	200	K/W

CHARACTERISTICS

T_j = 25 °C unless otherwise specified

Collector cut-off current $I_E = 0$; $V_{CB} = 10$ V	I_{CBO}	max.	50	nA
D.C. current gain $I_C = 30$ mA; $V_{CE} = 5$ V	h_{FE}	min. typ.	40 90	
Transition frequency at f = 500 MHz $I_C = 30$ mA; $V_{CE} = 5$ V	f_T	typ.	6,0	GHz
Collector capacitance at f = 1 MHz $I_E = i_e = 0$; $V_{CB} = 10$ V	C_c	typ.	0,7	pF
Emitter capacitance at f = 1 MHz $I_C = i_c = 0$; $V_{EB} = 0{,}5$ V	C_e	typ.	2,5	pF
Feedback capacitance at f = 1 MHz $I_C = 0$; $V_{CE} = 10$ V	C_{re}	typ.	0,5	pF

Maximum unilateral power gain (s_{re} assumed to be zero)

$$G_{UM} = 10 \log \frac{|s_{fe}|^2}{[1 - |s_{ie}|^2]\ [1 - |s_{oe}|^2]}$$

at $I_C = 30$ mA; $V_{CE} = 8$ V; $T_{amb} = 25$ °C f = 500 MHz f = 800 MHz	G_{UM}	typ. typ.	22,5 18,5	dB dB
Noise figure at f = 800 MHz; Z_S = opt.; $T_{amb} = 25$ °C $I_C = 4$ mA; $V_{CE} = 8$ V $I_C = 30$ mA; $V_{CE} = 8$ V	F	typ. typ.	1,6 2,3	dB dB

s-parameters (common emitter) at V_{CE} = 8 V; T_{amb} = 25 °C; typical values.

I_C mA	f MHz	s_{ie}	s_{fe}	s_{re}	s_{oe}	G_{UM} dB
2	40	0,92/ −13,6°	6,8/172,5°	0,011/81,7°	0,99/ −3,9°	41,8
	100	0,90/ −33,2°	6,8/160,7°	0,027/72,9°	0,97/ −9,0°	36,2
	200	0,86/ −62,0°	6,0/143,6°	0,048/59,0°	0,92/−15,6°	29,5
	500	0,79/−117,3°	3,8/111,1°	0,075/35,5°	0,78/−26,8°	19,9
	800	0,73/−144,5°	2,6/ 93,6°	0,080/27,4°	0,73/−32,5°	14,9
	1000	0,71/−157,6°	2,1/ 85,2°	0,081/25,5°	0,72/−36,6°	12,7
	1200	0,71/−167,6°	1,8/ 77,8°	0,081/24,7°	0,72/−40,5°	11,3
	1500	0,68/−178,8°	1,5/ 68,1°	0,090/24,5°	0,69/−46,5°	8,8
	2000	0,68/+163,8°	1,2/ 54,6°	0,088/30,2°	0,68/−55,2°	6,7
5	40	0,81/ −19,5°	16,0/169,4°	0,011/79,3°	0,98/ −6,9°	42,7
	100	0,79/ −46,6°	14,5/153,7°	0,024/67,7°	0,93/−15,8°	36,2
	200	0,74/ −82,4°	11,8/133,9°	0,040/52,9°	0,80/−25,4°	29,3
	500	0,69/−136,4°	6,5/103,9°	0,056/36,1°	0,60/−35,3°	21,0
	800	0,66/−158,8°	4,3/ 89,5°	0,061/35,2°	0,55/−38,5°	16,7
	1000	0,65/−169,4°	3,5/ 82,7°	0,064/36,8°	0,54/−41,3°	14,8
	1200	0,65/−177,2°	2,9/ 76,7°	0,066/38,6°	0,53/−44,3°	13,1
	1500	0,60/+172,1°	2,3/ 68,5°	0,083/42,5°	0,49/−49,2°	10,5
	2000	0,60/+158,0°	1,8/ 56,9°	0,095/48,3°	0,49/−56,1°	8,2
10	40	0,70/ −27,3°	26,2/165,5°	0,010/76,7°	0,97/−10,5°	43,6
	100	0,68/ −63,2°	22,8/146,5°	0,021/62,8°	0,86/−23,2°	35,7
	200	0,66/−102,8°	16,9/125,5°	0,032/49,2°	0,68/−34,3°	29,7
	500	0,64/−150,7°	8,3/ 98,9°	0,043/40,6°	0,46/−41,9°	21,7
	800	0,63/−167,1°	5,5/ 86,1°	0,048/45,8°	0,43/−43,1°	17,9
	1000	0,62/−176,9°	4,4/ 81,2°	0,056/47,4°	0,41/−45,2°	15,8
	1200	0,62/−176,9°	3,6/ 76,1°	0,061/49,9°	0,40/−47,6°	14,0
	1500	0,57/+165,6°	3,0/ 68,6°	0,084/53,2°	0,36/−52,3°	11,8
	2000	0,58/+153,5°	2,3/ 58,0°	0,103/55,7°	0,35/−58,1°	9,4
20	40	0,55/ −40,8°	40,6/160,3°	0,009/73,3°	0,93/−15,8°	12,4
	100	0,57/ −86,4°	32,5/137,6°	0,017/58,1°	0,77/−32,6°	35,9
	200	0,59/−125,5°	21,6/117,0°	0,024/48,7°	0,54/−43,9°	30,0
	500	0,62/−163,2°	9,9/ 94,4°	0,035/49,6°	0,34/−49,0°	22,6
	800	0,60/−176,3°	6,3/ 84,5°	0,046/55,5°	0,30/−49,2°	18,3
	1000	0,59/+175,8°	5,1/ 79,3°	0,053/58,1°	0,30/−49,9°	16,4
	1200	0,59/+171,1°	4,3/ 74,8°	0,061/59,7°	0,30/−52,0°	14,9
	1500	0,55/+161,8°	3,4/ 68,6°	0,088/61,0°	0,25/−57,7°	12,5
	2000	0,56/+150,8°	2,6/ 58,8°	0,111/61,2°	0,25/−61,8°	10,1
30	40	0,48/ −50,4°	48,6/157,4°	0,008/71,2°	0,91/−18,7°	42,5
	100	0,53/ −99,7°	36,9/133,2°	0,015/56,5°	0,71/−37,4°	35,8
	200	0,57/−135,7°	23,2/113,3°	0,021/49,7°	0,48/−48,0°	30,2
	500	0,60/−167,9°	10,4/ 93,1°	0,032/54,2°	0,29/−52,2°	22,5
	800	0,59/−180,0°	6,6/ 83,6°	0,044/54,9°	0,27/−52,0°	18,5
	1000	0,59/+173,4°	5,3/ 78,6°	0,053/61,8°	0,27/−52,2°	16,7
	1200	0,59/+169,2°	4,4/ 74,3°	0,060/62,8°	0,26/−54,3°	45,0
	1500	0,56/+160,2°	3,5/ 68,2°	0,089/63,3°	0,21/−59,7°	12,8
	2000	0,55/+149,4°	2,7/ 59,0°	0,113/62,3°	0,21/−64,5°	10,5

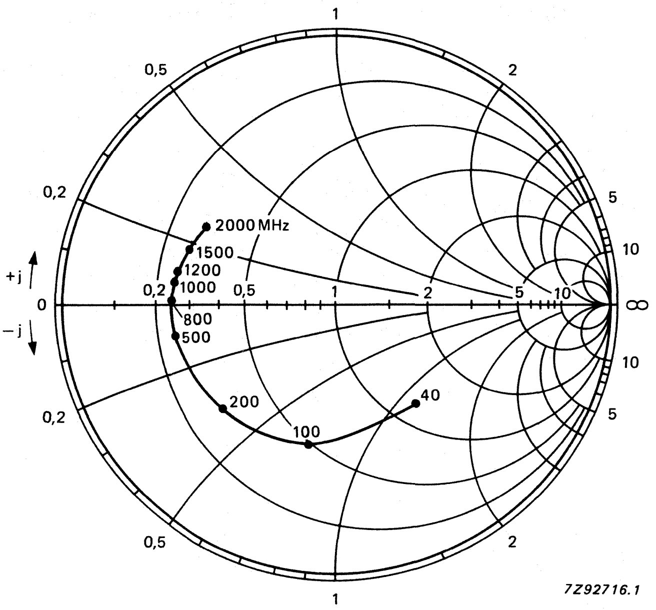

Fig. 2 Input impedance, derived from input reflection coefficient s_{ie} coordinates, in ohm x 50.

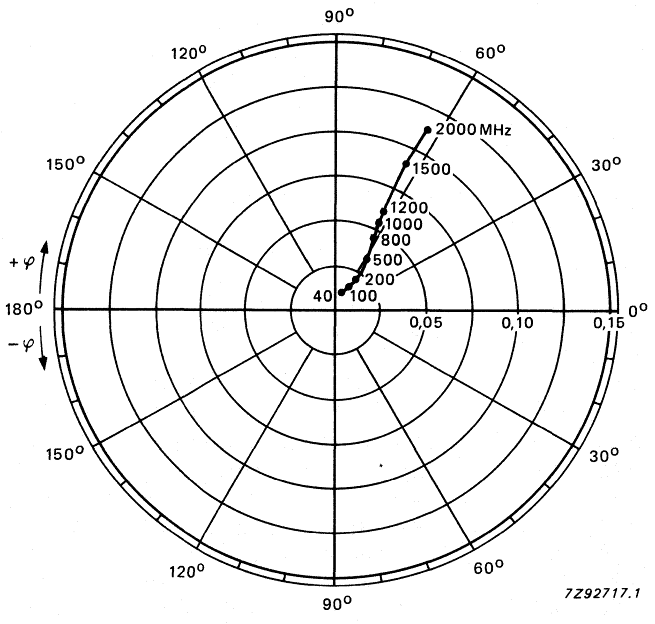

Fig. 3 Reverse transmission coefficient s_{re}.

Conditions for Figs 2 to 5: V_{CE} = 8 V; I_C = 30 mA; T_{amb} = 25 °C.

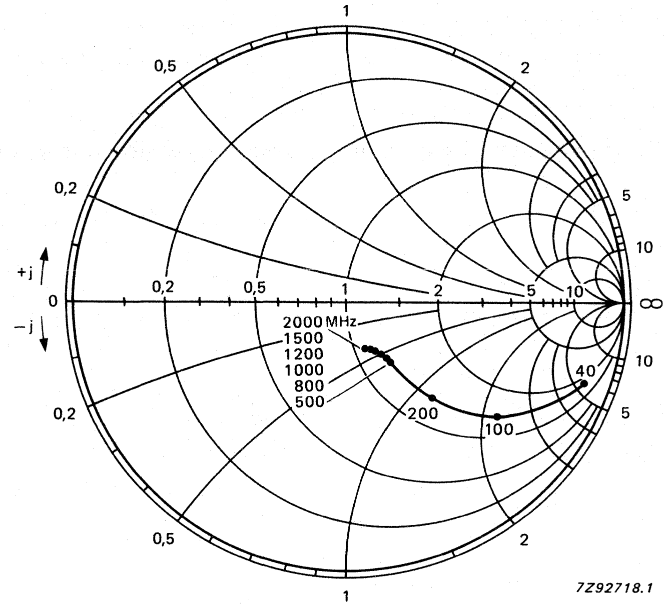

Fig. 4 Output impedance, derived from output reflection coefficient s_{oe} coordinates, in ohm x 50.

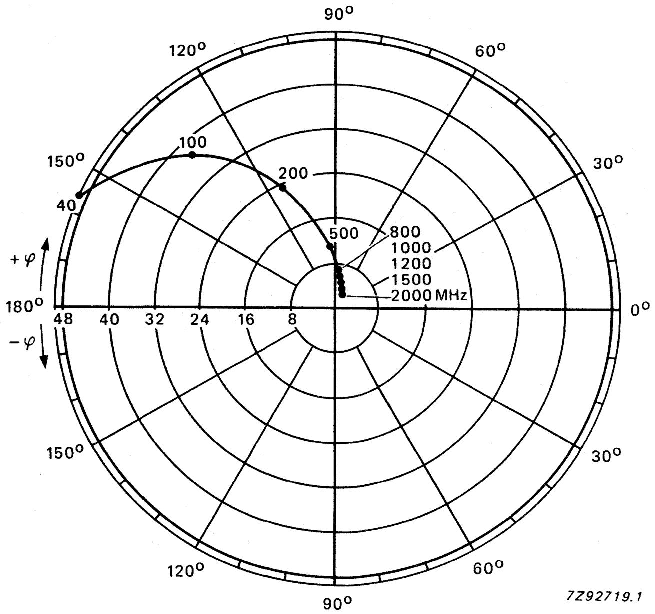

Fig. 5 Forward transmission coefficient s_{fe}.

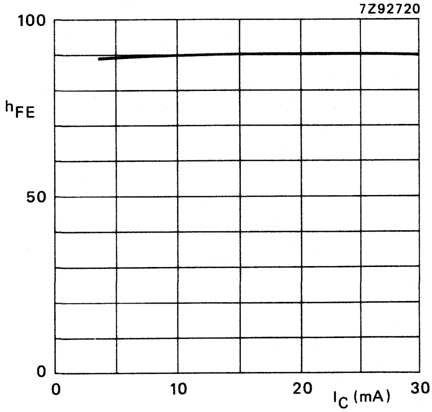

Fig. 6 V_{CE} = 5 V; T_j = 25 °C; typical values.

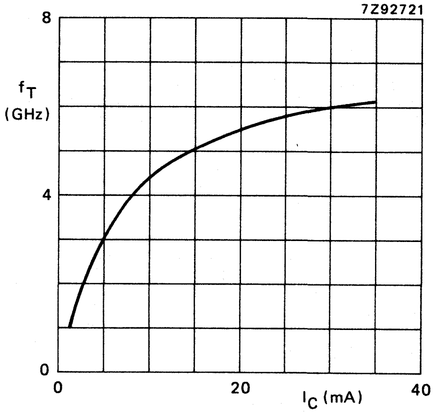

Fig. 7 V_{CE} = 5 V; f = 500 MHz; T_j = 25 °C; typical values.

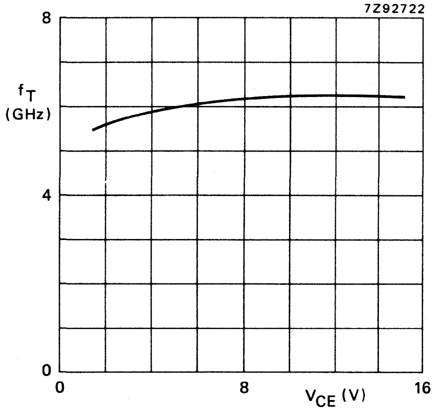

Fig. 8 I_C = 30 mA; f = 500 MHz; T_j = 25 °C; typical values.

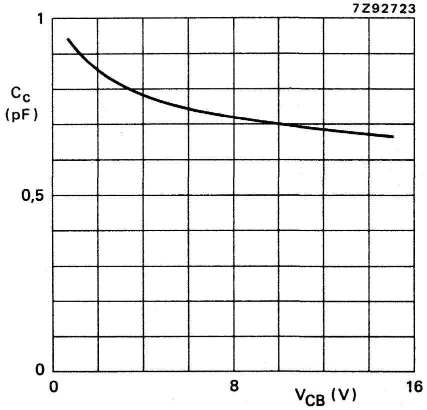

Fig. 9 $I_E = i_e = 0$; f = 1 MHz; T_j = 25 °C; typical values.

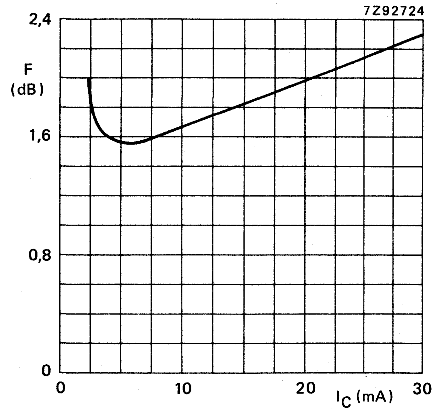

Fig. 10 V_{CE} = 8 V; f = 800 MHz; Z_S = opt.; T_{amb} = 25 °C; typical values.

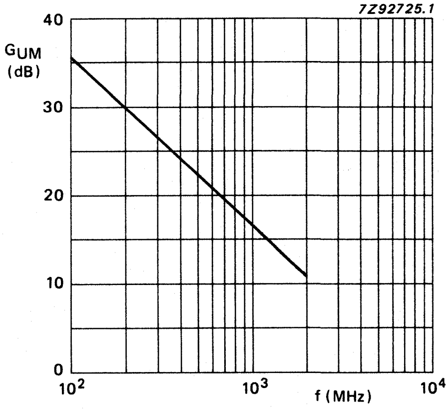

Fig. 11 V_{CE} = 8 V; I_C = 30 mA; T_{amb} = 25 °C; typical values.

N-P-N 2 GHz WIDEBAND TRANSISTOR

N-P-N transistor in a sub-miniature HERMETICALLY SEALED micro-stripline envelope. The BFP96 features low noise, high gain and low distortion figures.

This device is designed for v.h.f. and u.h.f. wideband amplifiers and applications in the GHz range.

P-N-P complement is BFQ32C.

QUICK REFERENCE DATA

Collector-base voltage	V_{CBO}	max.	20	V
Collector-emitter voltage	V_{CEO}	max.	15	V
Collector current (d.c.)	I_C	max.	100	mA
Total power dissipation up to T_{amb} = 75 °C	P_{tot}	max.	500	mW
Junction temperature	T_j	max.	175	°C
D.C. current gain I_C = 50 mA; V_{CE} = 10 V	h_{FE}	min.	25	
Transition frequency at f = 500 MHz I_C = 50 mA; V_{CE} = 10 V	f_T	typ.	5,0	GHz
Maximum unilateral power gain I_C = 50 mA; V_{CE} = 10 V at f = 500 MHz at f = 800 MHz	G_{UM}	typ. typ.	19,0 15,0	dB dB

MECHANICAL DATA

Dimensions in mm

Fig. 1 SOT-173.

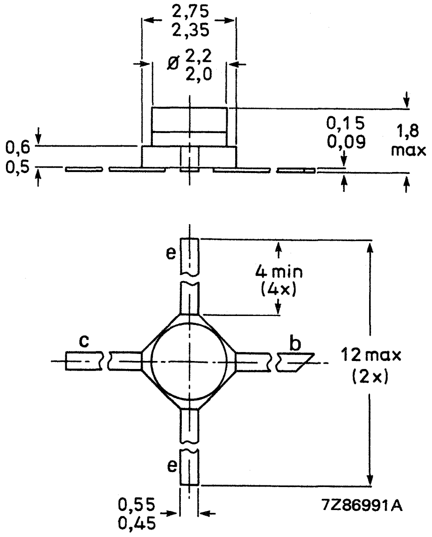

Marking code: P6

RATINGS

Limiting values in accordance with the Absolute Maximum System (IEC 134)

Collector-base voltage (open emitter)	V_{CBO}	max.	20	V
Collector-emitter voltage (open base)	V_{CEO}	max.	15	V
Emitter-base voltage (open collector)	V_{EBO}	max.	3	V
Collector current (d.c.)	I_C	max.	100	mA
Total power dissipation up to $T_{amb} = 75\ ^oC$ mounted on a ceramic substrate of 0,7 mm x 10 cm^2	P_{tot}	max.	500	mW
Storage temperature	T_{stg}	−65 to + 150		^oC
Junction temperature	T_j	max.	175	^oC

THERMAL RESISTANCE

→ From junction to ambient in free air mounted on a ceramic cubstrate of 0,7 mm x 10 cm^2	$R_{th\ j\text{-}a}$	=	200	K/W

CHARACTERISTICS

$T_j = 25\ ^oC$ unless otherwise specified

Collector cut-off current $I_E = 0$; $V_{CB} = 10$ V	I_{CBO}	max.	100	nA
D.C. current gain $I_C = 50$ mA; $V_{CE} = 10$ V	h_{FE}	min.	25	
Transition frequency at f = 500 MHz $I_C = 50$ mA; $V_{CE} = 10$ V	f_T	typ.	5,0	GHz
Collector capacitance at f = 1 MHz $I_E = i_e = 0$; $V_{CB} = 10$ V	C_c	typ.	1,3	pF
Emitter capacitance at f = 1 MHz $I_C = i_c = 0$; $V_{EB} = 0{,}5$ V	C_e	typ.	5,5	pF
Feedback capacitance at f = 1 MHz → $I_C = 0$; $V_{CE} = 10$ V	C_{re}	typ.	1,0	pF

Maximum unilateral power gain (s_{re} assumed to be zero)

$$G_{UM} = 10 \log \frac{|s_{fe}|^2}{[1 - |s_{ie}|^2]\ [1 - |s_{oe}|^2]}$$

at $I_C = 50$ mA; $V_{CE} = 10$ V; $T_{amb} = 25\ ^oC$ f = 500 MHz	G_{UM}	typ.	19,0	dB
f = 800 MHz		typ.	15,0	dB
→ Noise figure at f = 800 MHz; Z_S = opt.; $T_{amb} = 25\ ^oC$ $I_C = 50$ mA; $V_{CE} = 10$ V	F	typ.	3,7	dB

→

s-parameters (common emitter) at V_{CE} = 10 V; T_{amb} = 25 °C; typical values.

I_C mA	f MHz	s_{ie}	s_{fe}	s_{re}	s_{oe}	G_{UM} dB
10	40	0,73/ −50,1°	26,3/153,9°	0,020/67,3°	0,90/ −22,1°	38,9
	100	0,72/ −99,3°	18,7/128,4°	0,036/47,4°	0,67/ −41,7°	31,2
	200	0,71/−136,2°	11,2/108,6°	0,045/37,3°	0,44/ −51,9°	25,0
	500	0,71/−167,7°	4,8/ 88,2°	0,057/38,8°	0,29/ −58,8°	17,1
	800	0,71/−179,3°	3,1/ 75,9°	0,070/45,0°	0,29/ −63,8°	13,3
	1000	0,70/+174,9°	2,5/ 71,1°	0,078/48,9°	0,29/ −66,8°	11,3
	1200	0,70/+170,2°	2,1/ 65,5°	0,087/51,1°	0,30/ −71,5°	9,8
	1500	0,71/+161,3°	1,7/ 55,4°	0,098/50,5°	0,34/ −74,2°	8,1
	2000	0,72/+152,0°	1,3/ 42,8°	0,119/52,1°	0,35/ −87,0°	5,9
15	40	0,67/ −60,5°	32,9/150,2°	0,018/64,0°	0,87/ −27,4°	39,1
	100	0,69/−111,5°	22,0/123,6°	0,031/44,8°	0,60/ −50,0°	31,5
	200	0,70/−144,2°	12,9/105,5°	0,038/37,5°	0,38/ −62,3°	25,8
	500	0,71/−171,5°	5,5/ 86,8°	0,051/43,0°	0,23/ −69,8°	18,0
	800	0,71/+178,5°	3,5/ 75,4°	0,064/49,2°	0,22/ −73,2°	14,1
	1000	0,69/+173,1°	2,8/ 70,4°	0,075/52,1°	0,22/ −75,1°	12,1
	1200	0,70/+169,0°	2,4/ 65,1°	0,085/53,7°	0,23/ −80,0°	10,6
	1500	0,70/+159,7°	1,9/ 57,0°	0,100/54,0°	0,26/ −82,8°	8,8
	2000	0,71/+151,3°	1,5/ 45,0°	0,121/54,1°	0,26/ −93,0°	6,6
20	40	0,64/ −69,4°	38,8/146,7°	0,017/61,9°	0,84/ −32,3°	39,3
	100	0,67/−120,4°	24,3/120,1°	0,027/43,8°	0,54/ −57,4°	31,8
	200	0,69/−149,7°	13,9/103,5°	0,034/39,4°	0,33/ −71,9°	26,2
	500	0,71/−173,4°	5,8/ 86,5°	0,048/47,3°	0,20/ −83,3°	18,5
	800	0,71/+177,4°	3,7/ 75,6°	0,063/52,6°	0,18/ −86,7°	14,5
	1000	0,70/+172,2°	3,0/ 71,0°	0,075/55,0°	0,18/ −87,5°	12,6
	1200	0,70/+168,5°	2,5/ 65,7°	0,085/56,0°	0,19/ −91,8°	11,1
	1500	0,69/+159,0°	2,1/ 58,1°	0,102/56,6°	0,21/ −91,4°	9,3
	2000	0,70/+151,0°	1,5/ 46,4°	0,124/55,7°	0,22/−100,8°	7,0
30	40	0,61/ −79,4°	45,6/142,2°	0,016/59,2°	0,79/ −39,3°	39,4
	100	0,66/−128,6°	26,8/116,6°	0,025/43,9°	0,48/ −68,1°	32,2
	200	0,68/−155,2°	14,8/101,3°	0,031/43,0°	0,28/ −87,0°	26,5
	500	0,70/−176,0°	6,1/ 86,1°	0,047/53,4°	0,17/−107,7°	18,8
	800	0,69/+175,6°	3,9/ 76,3°	0,066/58,7°	0,16/−110,7°	14,7
	1000	0,68/+170,5°	3,1/ 72,2°	0,079/60,9°	0,16/−109,9°	12,6
	1200	0,69/+167,1°	2,6/ 67,2°	0,090/61,3°	0,16/−111,5°	11,2
	1500	0,69/+158,4°	2,2/ 59,2°	0,107/59,5°	0,17/−104,7°	9,9
	2000	0,70/+150,5°	1,6/ 47,9°	0,132/57,5°	0,17/−112,6°	7,4
50	40	0,58/ −91,5°	52,3/136,8°	0,015/56,4°	0,71/ −47,1°	39,3
	100	0,64/−137,0°	28,4/112,4°	0,022/44,8°	0,41/ −78,0°	32,2
	200	0,66/−159,6°	15,5/ 99,2°	0,028/17,9°	0,25/−100,3°	26,6
	500	0,68/−176,9°	6,6/ 85,6°	0,048/57,9°	0,17/−124,8°	19,0
	800	0,68/−175,5°	4,2/ 76,1°	0,069/61,0°	0,16/−128,5°	15,0
	1000	0,68/+170,4°	3,3/ 72,8°	0,082/62,4°	0,15/−128,1°	13,2
	1200	0,68/+166,8°	2,8/ 66,8°	0,094/62,1°	0,16/−129,4°	11,8
	1500	0,69/+157,6°	2,3/ 59,7°	0,106/60,7°	0,14/−122,7°	10,3
	2000	0,70/+149,6°	1,7/ 48,7°	0,130/58,0°	0,19/−129,8°	7,8

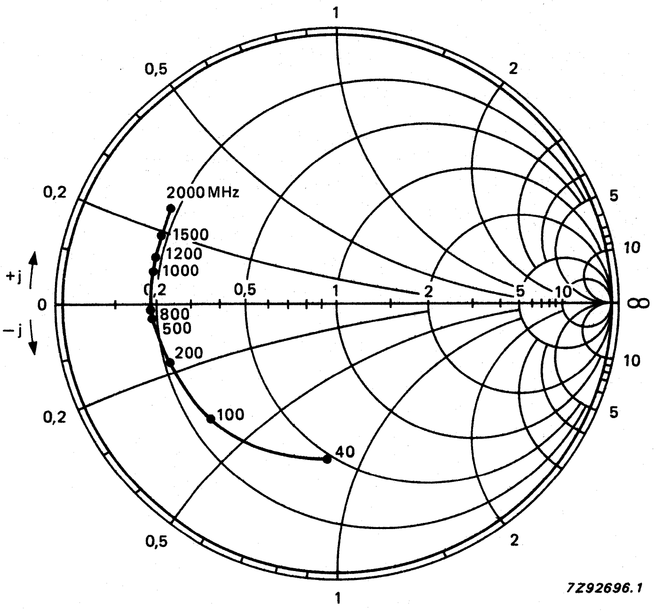

Fig. 2 Input impedance, derived from input reflection coefficient s_{ie} coordinates, in ohm x 50.

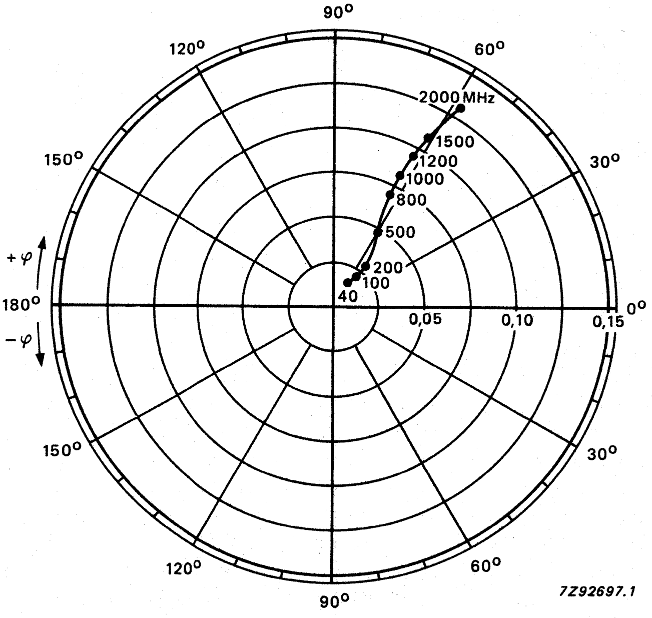

Fig. 3 Reverse transmission coefficient s_{re}.

Conditions for Figs 2 to 5: V_{CE} = 10 V; I_C = 50 mA; T_{amb} = 25 °C.

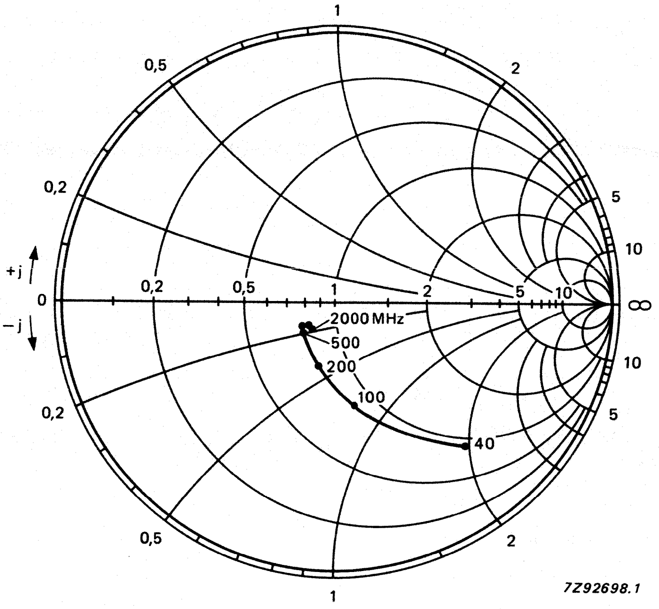

Fig. 4 Output impedance, derived from output reflection coefficient s_{oe} coordinates, in ohm x 50.

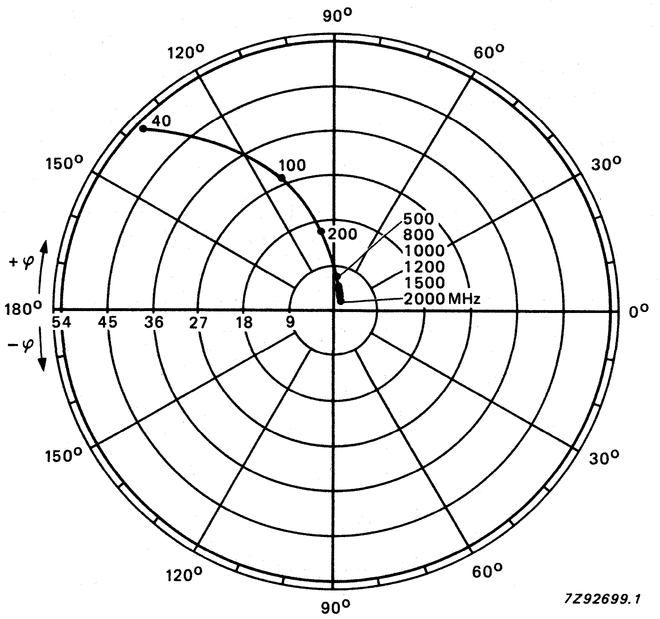

Fig. 5 Forward transmission coefficient s_{fe}.

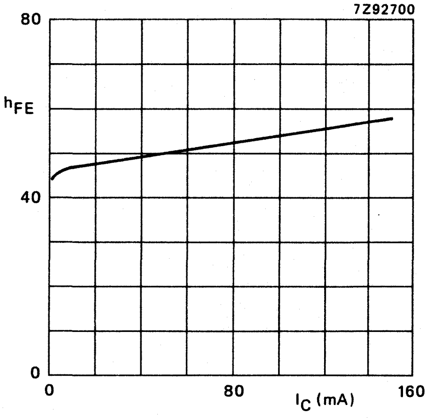

Fig. 6 $V_{CE} = 10$ V; $T_j = 25$ °C; typical values.

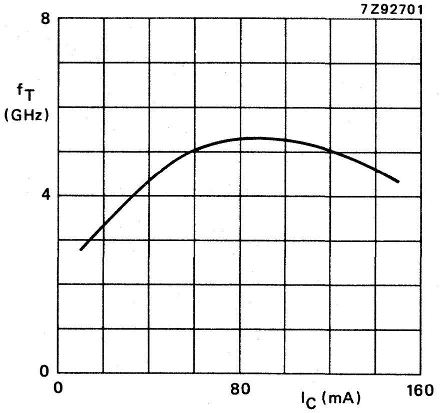

Fig. 7 $V_{CE} = 10$ V; f = 500 MHz; $T_j = 25$ °C; typical values.

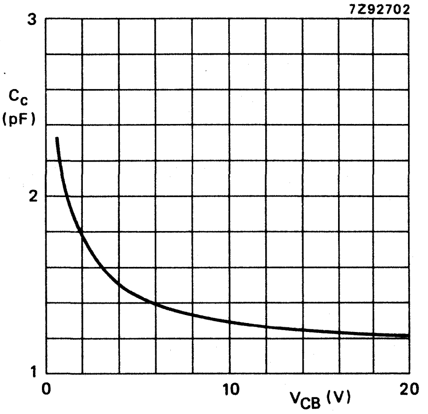

Fig. 8 $I_E = i_e$; f = 1 MHz; $T_j = 25$ °C; typical values.

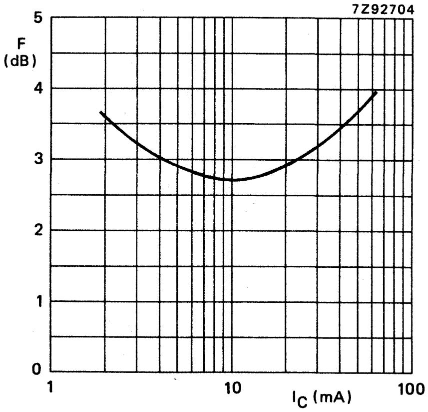

Fig. 9 $V_{CE} = 10$ V; f = 800 MHz; Z_S = opt.; $T_{amb} = 25$ °C; typical values.

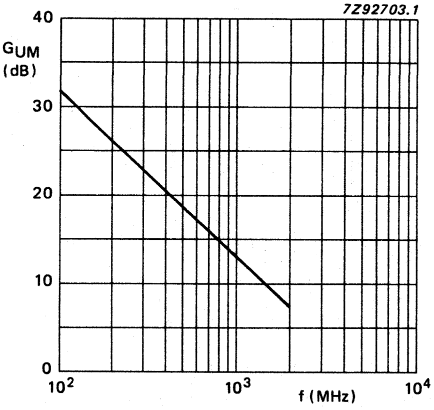

Fig. 10 $V_{CE} = 10$ V; $I_C = 50$ mA; $T_{amb} = 25$ °C; typical values.

N-P-N H.F. WIDEBAND TRANSISTOR

N-P-N multi-emitter transistor in a SOT-89 plastic envelope intended for application in thick and thin-film circuits. The transistor has extremely good intermodulation properties and a high power gain. It is primarily intended for:

- Output and driver stages of channel and band serial amplifiers with high output power for bands I, II, III and IV/V (40–860 MHz).
- Output and driver stages of wideband amplifiers.

QUICK REFERENCE DATA

Collector-base voltage (open emitter; peak value)	V_{CBOM}	max.	40	V
Collector-emitter voltage (open base)	V_{CEO}	max.	25	V
Collector current (peak value; f > 1 MHz)	I_{CM}	max.	300	mA
Total power dissipation up to T_{amb} = 25 °C	P_{tot}	max.	1	W
Junction temperature	T_j	max.	150	°C
Transition frequency at f = 500 MHz I_C = 150 mA; V_{CE} = 15 V	f_T	typ.	1,2	GHz
Feedback capacitance at f = 1 MHz I_C = 10 mA; V_{CE} = 15 V;	C_{re}	typ.	1,9	pF

MECHANICAL DATA

Dimensions in mm

Fig. 1 SOT-89.

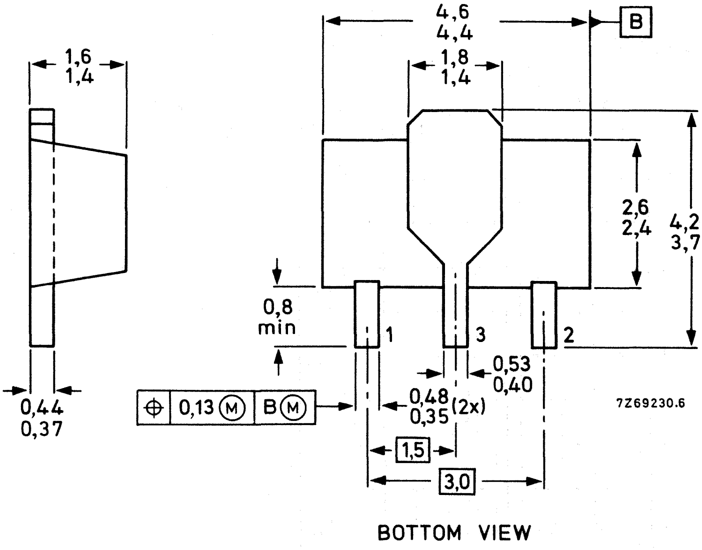

Mark

BFQ17 = FA

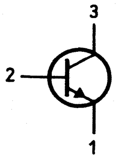

See also *Soldering recommendations.*

RATINGS Limiting values in accordance with the Absolute Maximum System (IEC 134)

Collector-base voltage (open emitter; peak value)	V_{CBOM}	max.	40	V	
Collector-emitter voltage ($R_{BE} \leq 50\ \Omega$; peak value)	V_{CERM}	max.	40	V	1)
Collector-emitter voltage (open base)	V_{CEO}	max.	25	V	1)
Emitter-base voltage (open collector)	V_{EBO}	max.	2	V	
Collector current (d.c.)	I_C	max.	150	mA	
Collector current (peak value; f > 1 MHz)	I_{CM}	max.	300	mA	
Total power dissipation up to T_{amb} = 25 °C mounted on a ceramic substrate area = 2,5 cm^2; thickness = 0,7 mm	P_{tot}	max.	1	W	
Storage temperature	T_{stg}	−65 to +150		°C	
Junction temperature	T_j	max.	150	°C	

THERMAL RESISTANCE

From junction to collector tab	$R_{th\ j-tab}$	=	30	K/W
From junction to ambient in free air mounted on a ceramic substrate area = 2,5 cm^2; thickness = 0,7 mm	$R_{th\ j-a}$	=	125	K/W

---

1) I_C = 10 mA.

CHARACTERISTICS

T_j = 25 °C unless otherwise specified

Collector cut-off current				
$I_E = 0$; $V_{CB} = 20$ V; $T_j = 150$ °C	I_{CBO}	max.	20	μA
Saturation voltage				
$I_C = 100$ mA; $I_B = 10$ mA	V_{CEsat}	max.	0,5	V
D.C. current gain				
$I_C = 50$ mA; $V_{CE} = 5$ V	h_{FE}	min.	25	
$I_C = 150$ mA; $V_{CE} = 5$ V	h_{FE}	min.	25	
Transition frequency at f = 500 MHz [1]				
$I_C = 150$ mA; $V_{CE} = 15$ V	f_T	typ.	1,2	GHz
Collector capacitance at f = 1 MHz				
$I_E = I_e = 0$; $V_{CB} = 15$ V	C_c	max.	4	pF
Feedback capacitance at f = 1 MHz				
$I_C = 10$ mA; $V_{CE} = 15$ V; $T_{amb} = 25$ °C	C_{re}	typ.	1,9	pF

Max. unilateral power gain (s_{re} assumed to be zero)

$$G_{UM} = 10 \log \frac{|s_{fe}|^2}{(1-|s_{ie}|^2)(1-|s_{oe}|^2)}$$

$I_C = 60$ mA; $V_{CE} = 15$ V; $T_{amb} = 25$ °C;				
f = 200 MHz	G_{UM}	typ.	16	dB
f = 800 MHz	G_{UM}	typ.	6,5	dB

---

[1] Measured under pulse conditions.

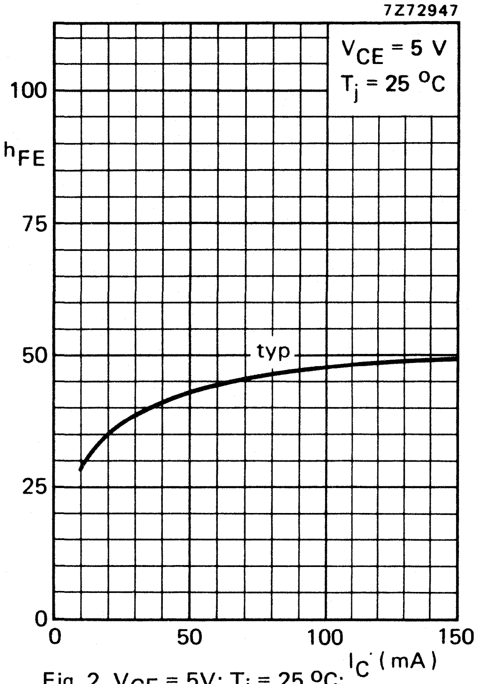

Fig. 2. V_{CE} = 5V; T_j = 25 °C; typical values

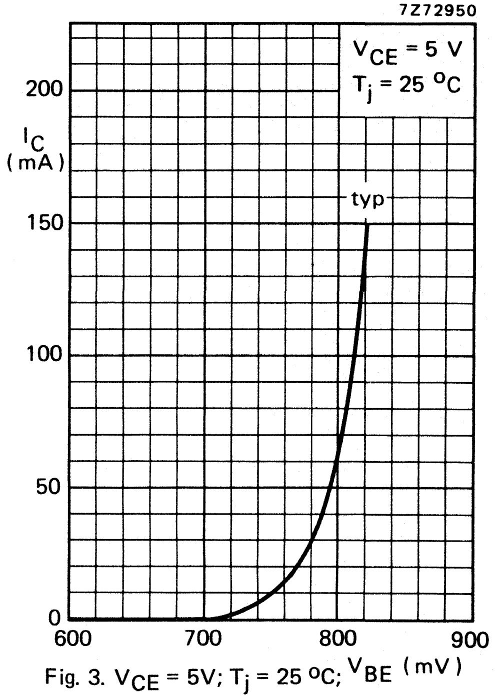

Fig. 3. V_{CE} = 5V; T_j = 25 °C; typical values

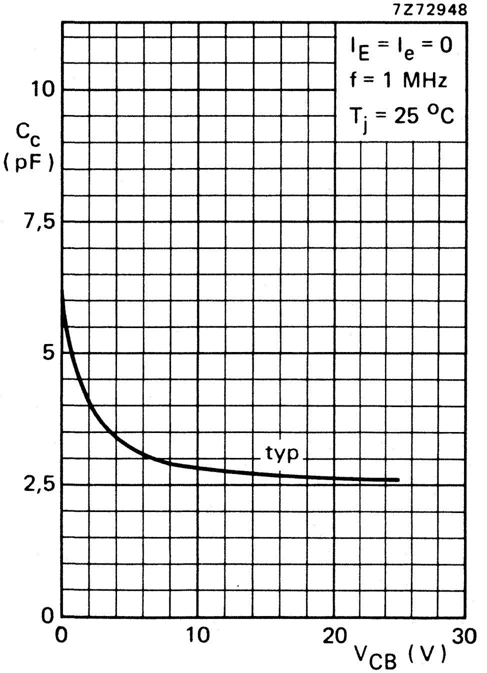

Fig. 4. $I_E = i_e = 0$; f = 1 MHz; T_j = 25 °C; typical values

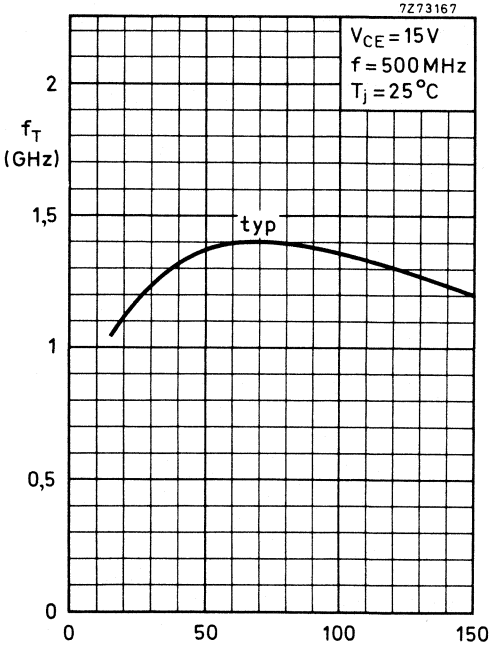

Fig. 5.

Fig. 5. V_{CE} = 15V; f = 500 MHz; T_j = 25 °C; typical values

N-P-N H.F. WIDEBAND TRANSISTOR

N-P-N transistor in a plastic SOT-89 envelope intended for application in thick and thin-film circuits. It is primarily intended for MATV purposes.

QUICK REFERENCE DATA

Collector-base voltage (open emitter)	V_{CBO}	max.	25	V
Collector-emitter voltage (open base)	V_{CEO}	max.	15	V
Collector current (d.c.)	I_C	max.	150	mA
Total power dissipation up to T_{amb} = 25 °C	P_{tot}	max.	1	W
Junction temperature	T_j	max.	150	°C
Transition frequency at f = 500 MHz I_C = 100 mA; V_{CE} = 10 V	f_T	typ.	3,6	GHz
Feedback capacitance at f = 10,7 MHz I_C = 0; V_{CE} = 10 V	C_{re}	typ.	1,2	pF
Intermodulation distortion I_C = 80 mA; V_{CE} = 10 V; R_L = 75 Ω measured at $f_{(p + q - r)}$ = 793,25 MHz	d_{im}	max.	−60	dB

MECHANICAL DATA

Dimensions in mm

Fig. 1 SOT-89.

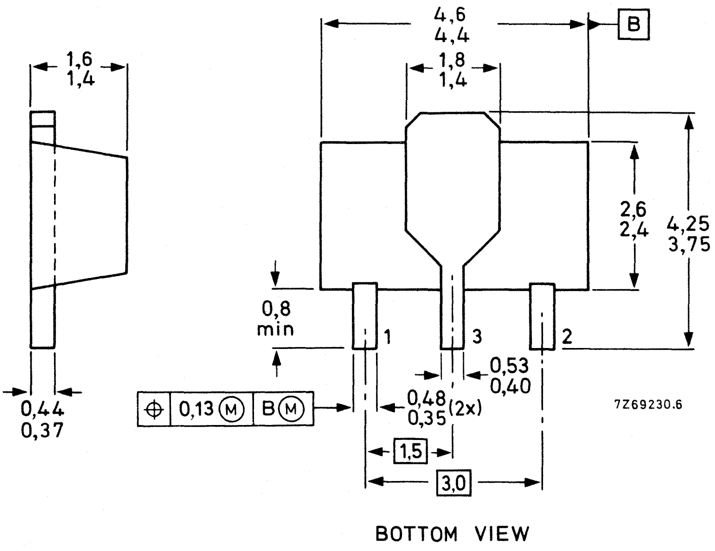

Mark

BFQ18A = FF

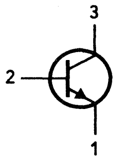

See also soldering recommendations

RATINGS

Limiting values in accordance with the Absolute Maximum System (IEC 134)

Collector-base voltage (open emitter)	V_{CBO}	max.	25	V
Collector-emitter voltage (open base)	V_{CEO}	max.	15	V
Emitter-base voltage (open collector)	V_{EBO}	max.	2	V
Collector current (d.c.)	I_C	max.	150	mA
Total power dissipation up to T_{amb} = 25 °C *	P_{tot}	max.	1	W
Storage temperature	T_{stg}	−65 to + 150		°C
Junction temperature	T_j	max.	150	°C

THERMAL RESISTANCE

From junction to collector tab	$R_{th\ j\text{-}tab}$	=	25	K/W
From junction to ambient in free air *	$R_{th\ j\text{-}a}$	=	125	K/W

CHARACTERISTICS

T_{amb} = 25 °C unless otherwise specified

D.C. current gain **				
I_C = 50 mA; V_{CE} = 10 V	h_{FE}	min.	25	
I_C = 100 mA; V_{CE} = 10 V	h_{FE}	min.	25	
Transition frequency at f = 500 MHz **				
I_C = 50 mA; V_{CE} = 10 V	f_T	typ.	3,2	GHz
I_C = 100 mA; V_{CE} = 10 V	f_T	typ.	3,6	GHz
Collector capacitance at f = 1 MHz				
$I_E = I_e = 0$; V_{CB} = 10 V	C_c	typ.	2,0	pF
Emitter capacitance at f = 1 MHz				
$I_C = I_c = 0$; V_{EB} = 0,5 V	C_e	typ.	11	pF
Feedback capacitance at f = 10,7 MHz				
$I_C = 0$; V_{CE} = 10 V	C_{re}	typ.	1,2	pF

---

* The device mounted on a ceramic substrate area = 2,5 cm^2; thickness = 0,7 mm.

** Measured under pulse conditions.

Intermodulation distortion (see Fig. 2)			
I_C = 80 mA; V_{CE} = 10 V; R_L = 75 Ω			
$V_p = V_o$ = 700 mV at f_p = 795,25 MHz			
$V_q = V_o$ −6 dB at f_q = 803,25 MHz			
$V_r = V_o$ −6 dB at f_r = 805,25 MHz			
Measured at $f_{(p+q-r)}$ = 793,25 MHz	d_{im}	max.	−60 dB

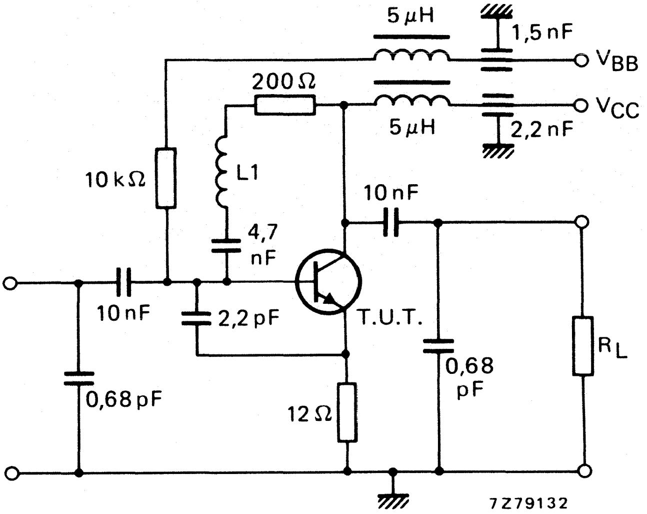

Fig. 2 MATV-test circuit (40–860 MHz).

N-P-N 1 GHz WIDEBAND TRANSISTOR ←

N-P-N transistor in a **SOT-89** plastic envelope intended for application in thick- and thin-film circuits.
It is primarily intended for use in u.h.f. and microwave amplifiers such as in aerial amplifiers, radar systems, oscilloscopes, spectrum analysers etc.
The transistor features very low intermodulation distortion and high power gain. Thanks to its very high transition frequency, it also has excellent wideband properties and low noise up to high frequencies.

QUICK REFERENCE DATA

Collector-base voltage (open emitter)	V_{CBO}	max.	20	V
Collector-emitter voltage (open base)	V_{CEO}	max.	15	V
Collector current (d.c.)	I_C	max.	75	mA
Total power dissipation up to T_{amb} = 87,5 °C	P_{tot}	max.	500	mW
Junction temperature	T_j	max.	150	°C
Transition frequency at f = 500 MHz I_C = 50 mA; V_{CE} = 10 V	f_T	typ.	5	GHz
Feedback capacitance at f = 1 MHz I_C = 10 mA; V_{CE} = 10 V;	C_{re}	typ.	1,3	pF
Noise figure at optimum source impedance I_C = 50 mA; V_{CE} = 10 V; f = 500 MHz;	F	typ.	3,3	dB

MECHANICAL DATA

Dimensions in mm

Fig. 1 SOT-89.

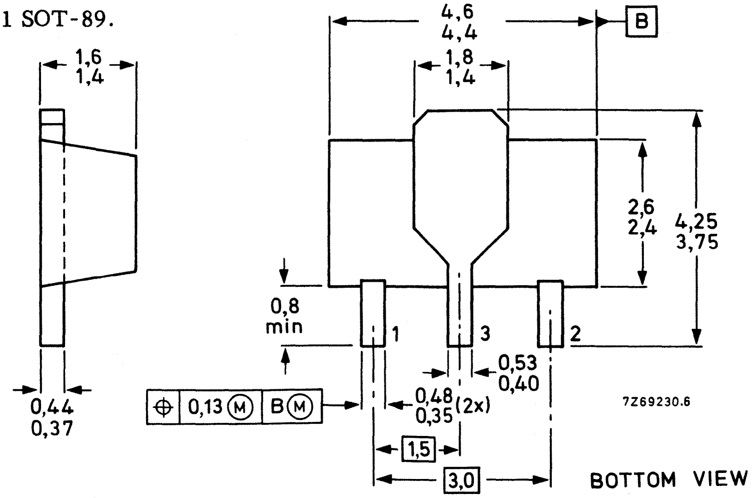

Mark

BFQ19 = FB ←

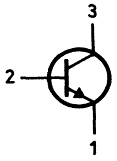

See also soldering recommendations

RATINGS Limiting values in accordance with the Absolute Maximum System (IEC134)

Collector-base voltage (open emitter)	V_{CBO}	max.	20	V
Collector-emitter voltage (open base)	V_{CEO}	max.	15	V
Emitter-base voltage (open collector)	V_{EBO}	max.	3,3	V
Collector current (d.c.)	I_C	max.	75	mA
Collector current (peak value); f > 1 MHz	I_{CM}	max.	150	mA
Total power dissipation up to T_{amb} = 87,5 °C mounted on a ceramic substrate area = 2,5 cm^2; thickness = 0,7 mm	P_{tot}	max.	500	mW
Storage temperature	T_{stg}	−65 to +150		°C
Junction temperature	T_j	max.	150	°C

THERMAL RESISTANCE

From junction to collector tab	$R_{th\,j-tab}$	=	40	K/W
From junction to ambient in free air mounted on a ceramic substrate area = 2,5 cm^2; thickness = 0,7 mm	$R_{th\,j-a}$	=	125	K/W

CHARACTERISTICS

$T_j = 25\ ^{\circ}C$ unless otherwise specified

Collector cut-off current				
$I_E = 0$: $V_{CB} = 10$ V	I_{CBO}	max.	100	nA
D.C. current gain 1)				
$I_C = 50$ mA: $V_{CE} = 10$ V	h_{FE}	min. typ.	25 50	
$I_C = 75$ mA: $V_{CE} = 10$ V	h_{FE}	min. typ.	25 52	
Transition frequency at f = 500 MHz 1)				
$I_C = 50$ mA: $V_{CE} = 10$ V	f_T	min. typ.	4,0 5,0	GHz GHz
$I_C = 75$ mA: $V_{CE} = 10$ V	f_T	min. typ.	4,4 5,5	GHz GHz
Collector capacitance at f = 1 MHz				
$I_E = I_e = 0$: $V_{CB} = 10$ V	C_c	typ.	1,6	pF
Emitter capacitance at f = 1 MHz				
$I_C = I_c = 0$: $V_{EB} = 0,5$ V	C_e	typ.	5,0	pF
Feedback capacitance at f = 1 MHz				
$I_C = 10$ mA: $V_{CE} = 10$ V: $T_{amb} = 25\ ^{\circ}C$	C_{re}	typ.	1,3	pF
Noise figure at optimum source impedance				
$I_C = 50$ mA: $V_{CE} = 10$ V; f = 500 MHz; $T_{amb} = 25\ ^{\circ}C$	F	typ.	3,3	dB

Max. unilateral power gain (s_{re} assumed to be zero)

$$G_{UM} = 10 \log \frac{|s_{fe}|^2}{(1 - |s_{ie}|^2)(1 - |s_{oe}|^2)}$$

$I_C = 50$ mA: $V_{CE} = 10$ V; $T_{amb} = 25\ ^{\circ}C$:

f = 200 MHz	G_{UM}	typ.	18,5	dB
f = 500 MHz	G_{UM}	typ.	11,5	dB
f = 800 MHz	G_{UM}	typ.	7,5	dB

---

1) Measured under pulse conditions.

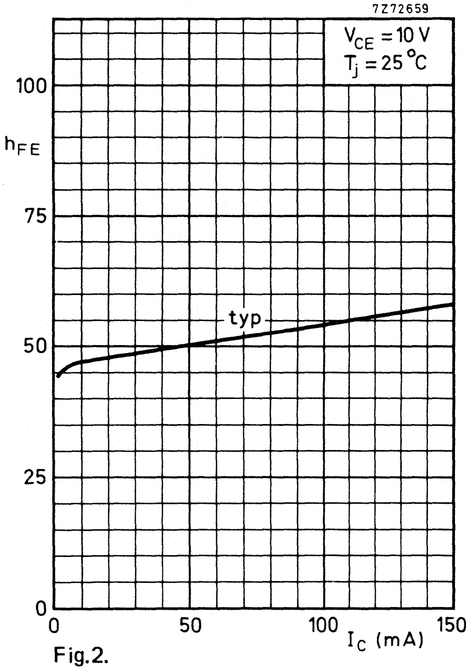

Fig.2.

VCE=10V;Tj=25°C; Typical values

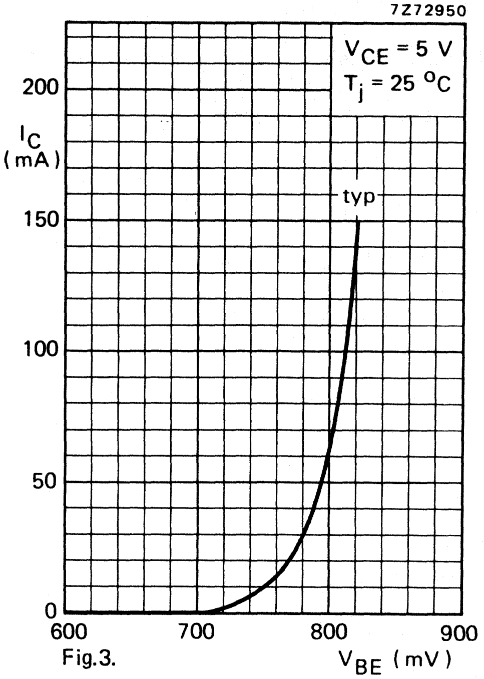

Fig.3.

VCE=5V;Tj=25°C; Typical values

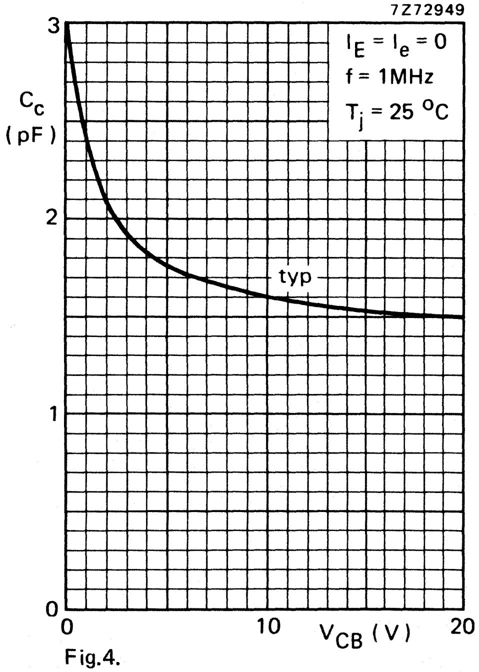

Fig.4.

IE=Ie=0;f=1MHz;Tj=25°C; Typical values

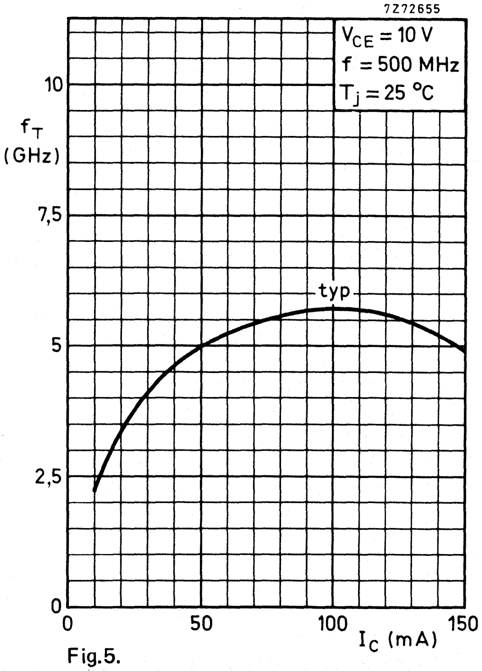

Fig.5.

VCE=10V;f=500MHz;Tj=25°C; Typical values

N-P-N H.F. WIDEBAND TRANSISTOR

N-P-N transistor in a TO-72 metal envelope with insulated electrodes and a shield lead connected to the case. It is primarily intended for use in u.h.f. and microwave aerial amplifiers, radar systems, oscilloscopes, spectrum analysers etc.

The transistor has extremely high power gain and good low noise performance.

P-N-P complement is BFQ24.

QUICK REFERENCE DATA

Collector-base voltage (open emitter)	V_{CBO}	max.	15	V
Collector-emitter voltage (open base)	V_{CEO}	max.	12	V
Collector current (d.c.)	I_C	max.	35	mA
Total power dissipation up to T_{amb} = 65 °C	P_{tot}	max.	150	mW
Junction temperature	T_j	max.	200	°C
Transition frequency at f = 500 MHz I_C = 30 mA; V_{CE} = 5 V	f_T	typ.	5,0	GHz
Feedback capacitance at f = 1 MHz I_C = 0; V_{CE} = 5 V	C_{re}	typ.	0,65	pF
Noise figure at optimum source impedance I_C = 2 mA; V_{CE} = 5 V; f = 500 MHz	F	typ.	1,9	dB
Maximum unilateral power gain I_C = 30 mA; V_{CE} = 5 V; f = 500 MHz	G_{UM}	typ.	16,0	dB

MECHANICAL DATA

Dimensions in mm

Fig. 1 TO-72 with insulated electrodes.

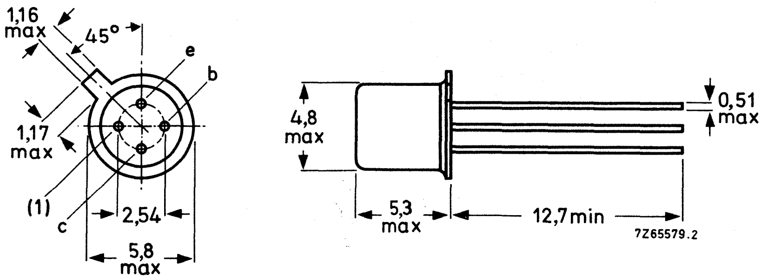

(1) Shield lead connected to case.

Accessories: 56246 (distance disc).

RATINGS

Limiting values in accordance with the Absolute Maximum System (IEC 134)

Collector-base voltage (open emitter)	V_{CBO}	max.	15	V
Collector-emitter voltage (open base)	V_{CEO}	max.	12	V
Emitter-base voltage (open collector)	V_{EBO}	max.	2	V
Collector current (d.c.)	I_C	max.	35	mA
Collector current (peak value) at $f > 1$ MHz	I_{CM}	max.	50	mA
Total power dissipation up to $T_{amb} = 65$ °C	P_{tot}	max.	150	mW
Storage temperature	T_{stg}	−65 to + 200		°C
Junction temperature	T_j	max.	200	°C

THERMAL RESISTANCE

From junction to ambient in free air	$R_{th\ j\text{-}a}$	=	900	K/W
From junction to case	$R_{th\ j\text{-}c}$	=	600	K/W

CHARACTERISTICS

$T_j = 25$ °C unless otherwise specified

Collector cut-off current $I_E = 0$; $V_{CB} = 5$ V	I_{CBO}	max.	50	nA
D.C. current gain $I_C = 10$ mA; $V_{CE} = 5$ V	h_{FE}	50 to 150		
Transition frequency (note) $I_C = 30$ mA; $V_{CE} = 5$ V; $f = 500$ MHz	f_T	typ.	5,0	GHz
Feedback capacitance (note) $I_C = 0$; $V_{CE} = 5$ V; $f = 1$ MHz; $T_{amb} = 25$ °C	C_{re}	typ.	0,65	pF
Noise figure at optimum source impedance (note) $I_C = 2$ mA; $V_{CE} = 5$ V; $f = 500$ MHz; $T_{amb} = 25$ °C	F	typ.	1,9	dB
$I_C = 10$ mA; $V_{CE} = 5$ V; $f = 200$ MHz; $T_{amb} = 25$ °C	F	max.	2,5	dB

Maximum unilateral power gain (note)
s_{re} assumed to be zero

$$G_{UM} = 10 \log \frac{|s_{fe}|^2}{(1 - |s_{ie}|^2)(1 - |s_{oe}|^2)}$$

$I_C = 10$ mA; $V_{CE} = 5$ V; $f = 200$ MHz; $T_{amb} = 25$ °C	G_{UM}	min.	21,0	dB
$I_C = 30$ mA; $V_{CE} = 5$ V; $f = 500$ MHz; $T_{amb} = 25$ °C	G_{UM}	typ.	16,0	dB

Note

Shield lead grounded.

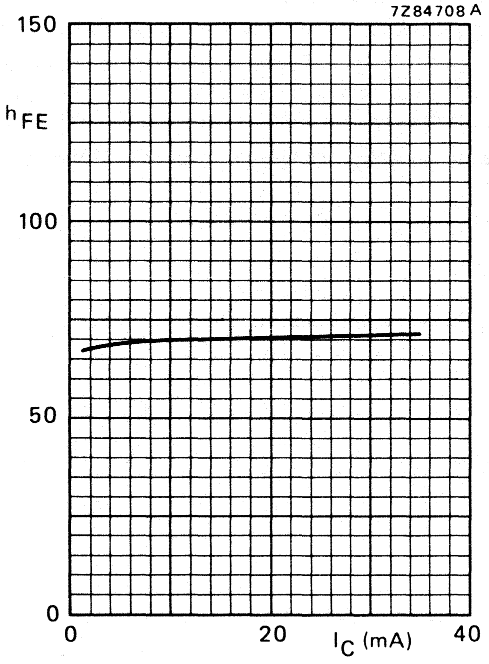

Fig. 2.

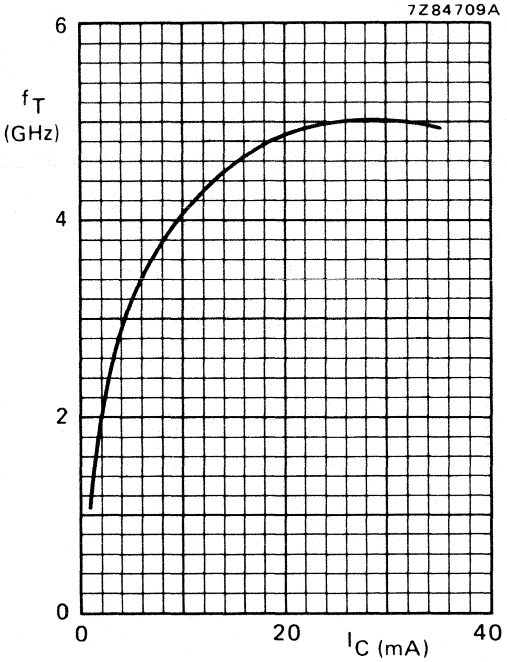

Fig. 3.

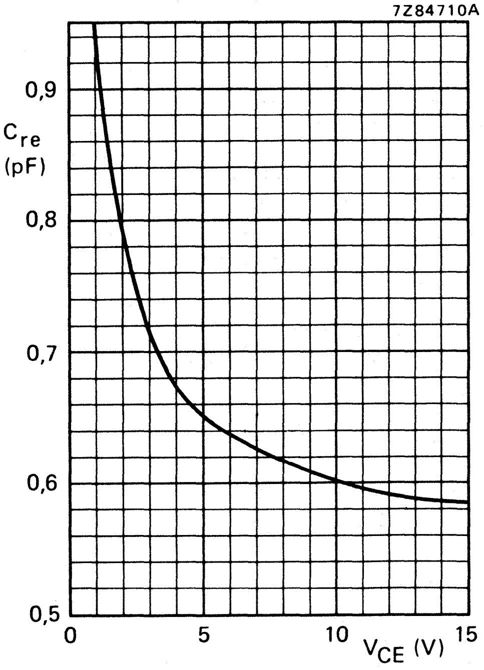

Fig. 4.

Conditions for Figs 2, 3 and 4:

Fig. 2 V_{CE} = 5 V; T_j = 25 °C; typical values.

Fig. 3 V_{CE} = 5 V; f = 500 MHz; T_j = 25 °C; shield lead grounded; typical values.

Fig. 4 I_C = 0; f = 1 MHz; T_{amb} = 25 °C; shield lead grounded; typical values.

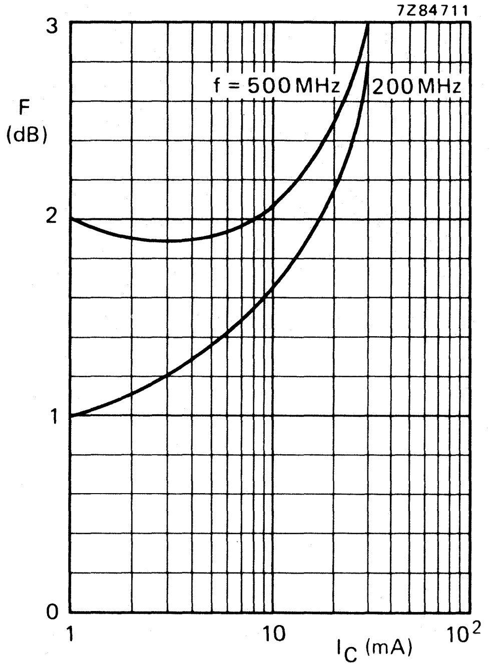

Fig. 5 V_{CE} = 5 V; Z_S = optimum; T_{amb} = 25 °C; typical values; shield lead grounded; typ. values.

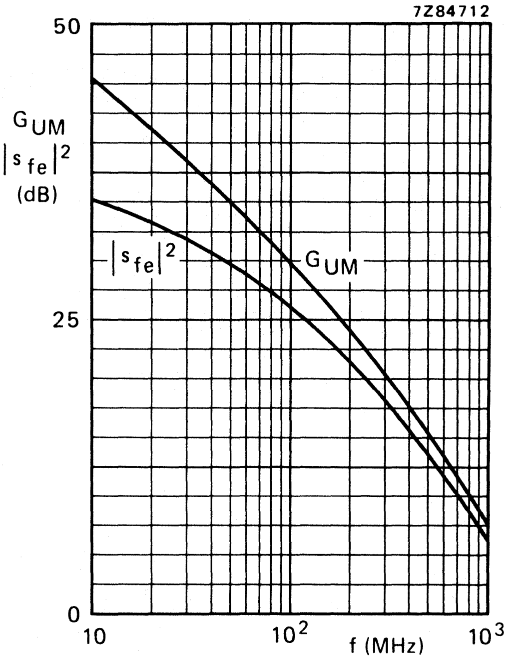

Fig. 6 V_{CE} = 5 V; I_C = 30 mA; T_{amb} = 25 °C; typical values; shield lead grounded; typ. values.

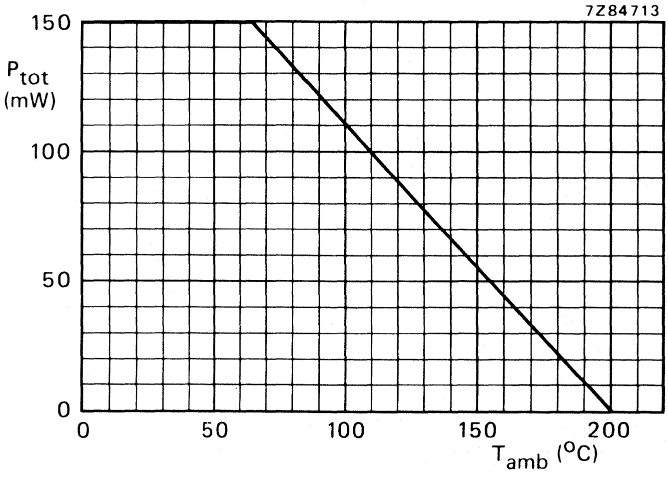

Fig. 7 Power derating curve versus ambient temperature.

P-N-P 1 GHz WIDEBAND TRANSISTOR

P-N-P transistor in a plastic SOT-37 envelope. It is primarily intended for use in u.h.f. and microwave amplifiers such as in aerial amplifiers, radar systems, oscilloscopes, spectrum analysers etc.

The transistor features low intermodulation distortion and high power gain; thanks to its very high transition frequency, it also has excellent wideband properties and low noise up to high frequencies.

N-P-N complements are BFR91 and BFR91A.

QUICK REFERENCE DATA

Collector-base voltage (open emitter)	$-V_{CBO}$	max.	15	V
Collector-emitter voltage (open base)	$-V_{CEO}$	max.	12	V
Collector current (d.c.)	$-I_C$	max.	35	mA
Total power dissipation up to T_{amb} = 60 °C	P_{tot}	max.	180	mW
Junction temperature	T_j	max.	150	°C
Transition frequency at f = 500 MHz $-I_C$ = 30 mA; $-V_{CE}$ = 5 V	f_T	typ.	5,0	GHz
Feedback capacitance at f = 1 MHz $-I_C$ = 2 mA; $-V_{CE}$ = 5 V	C_{re}	typ.	0,8	pF
Noise figure at optimum source impedance $-I_C$ = 2 mA; $-V_{CE}$ = 5 V; f = 500 MHz	F	typ.	2,4	dB

MECHANICAL DATA (see Fig. 1)

MECHANICAL DATA

Dimensions in mm

Fig. 1 SOT-37.

Connections

1. Base
2. Emitter
3. Collector

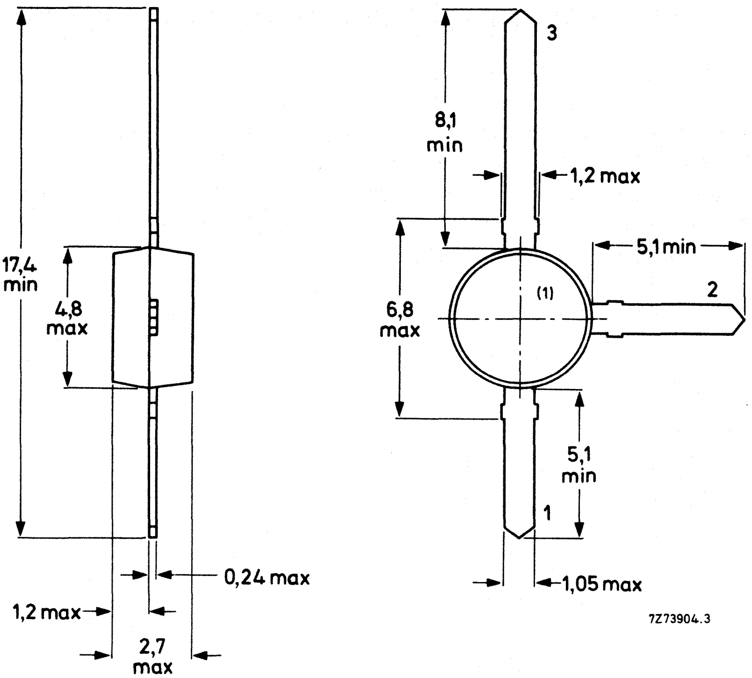

(1) = type number marking.

RATINGS

Limiting values in accordance with the Absolute Maximum System (IEC 134)

Collector-base voltage (open emitter)	$-V_{CBO}$	max.	15	V
Collector-emitter voltage (open base)	$-V_{CEO}$	max.	12	V
Emitter-base voltage (open collector)	$-V_{EBO}$	max.	2	V
Collector current (d.c.)	$-I_C$	max.	35	mA
Collector current (peak value) at f > 1 MHz	$-I_{CM}$	max.	50	mA
Total power dissipation up to T_{amb} = 60 °C	P_{tot}	max.	180	mW
Storage temperature	T_{stg}	−65 to + 150		°C
Junction temperature	T_j	max.	150	°C

THERMAL RESISTANCE

From junction to ambient in free air mounted on a fibre-glass print → of 40 mm x 25 mm x 1 mm	$R_{th\ j\text{-}a}$	=	500	K/W

CHARACTERISTICS

T_j = 25 °C unless otherwise specified

Collector cut-off current $I_E = 0; -V_{CB} = 5$ V	$-I_{CBO}$	max.	50 nA	
D.C. current gain $-I_C = 30$ mA; $-V_{CE} = 5$ V	h_{FE}	min.	20	←
Transition frequency f = 500 MHz; $-I_C = 30$ mA; $-V_{CE} = 5$ V	f_T	typ.	5,0 GHz	←
Collector capacitance f = 1 MHz; $I_E = I_e = 0; -V_{CB} = 10$ V	C_c	typ.	1,2 pF	←
Emitter capacitance f = 1 MHz; $I_C = I_c = 0; -V_{EB} = 0{,}5$ V	C_e	typ.	1,8 pF	
Feedback capacitance f = 1 MHz; $I_C = 0; -V_{CE} = 10$ V	C_{re}	typ.	0,8 pF	←
Noise figure at optimum source impedance $-I_C = 2$ mA; $-V_{CE} = 5$ V; f = 500 MHz; $T_{amb} = 25$ °C	F	typ.	2,4 dB	
Maximum unilateral power gain (s_{re} assumed to be zero) $-I_C = 30$ mA; $-V_{CE} = 5$ V; f = 500 MHz; $T_{amb} = 25$ °C $G_{UM} = 10 \log \frac{\lvert s_{fe}\rvert^2}{[1-\lvert s_{ie}\rvert^2]\,[1-\lvert s_{oe}\rvert^2]}$	G_{UM}	typ.	15,0 dB	
Output voltage at $d_{im} = -60$ dB $I_C = 30$ mA; $V_{CE} = 5$ V; $R_L = 75\ \Omega$; $T_{amb} = 25$ °C $V_p = V_o$ at $d_{im} = -60$ dB ; $f_p = 495{,}25$ MHz $V_q = V_o - 6$ dB ; $f_q = 503{,}25$ MHz $V_r = V_o - 6$ dB ; $f_r = 505{,}25$ MHz measured at $f_{(p+q-r)} = 495{,}25$ MHz	V_o	typ.	300 mV	←

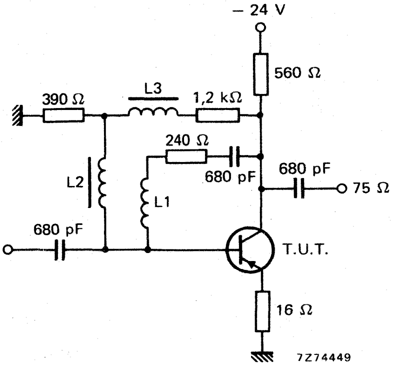

Fig. 2 Intermodulation distortion test circuit.

L1: 4 turns Cu wire (0,35); winding pitch 1 mm; internal diameter 4 mm.
L2 and L3: 5 μH (code number 3122 108 20150)

←

→

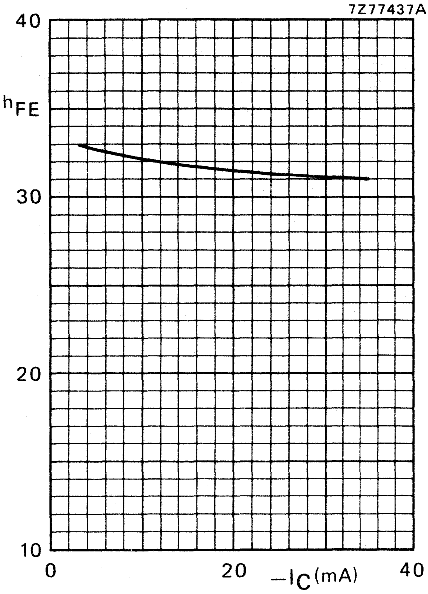

Fig. 3 $-V_{CE}$ = 5 V; T_j = 25 °C; typical values.

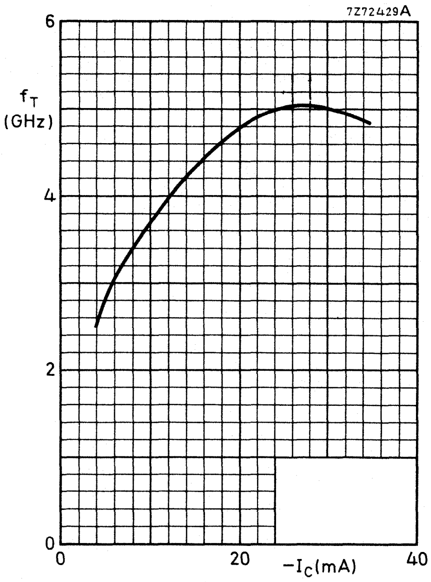

Fig. 4 $-V_{CE}$ = 5 V; f = 500 MHz; T_j = 25 °C; typical values.

→

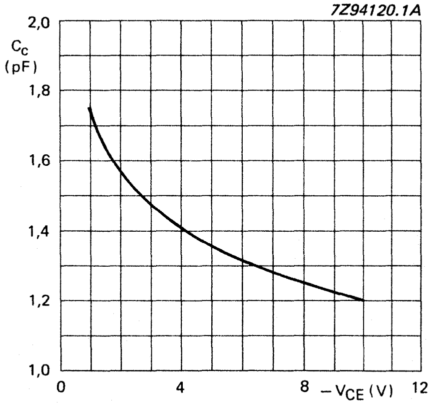

Fig. 5 $I_E = I_e = 0$; f = 1 MHz; T_j = 25 °C; typical values.

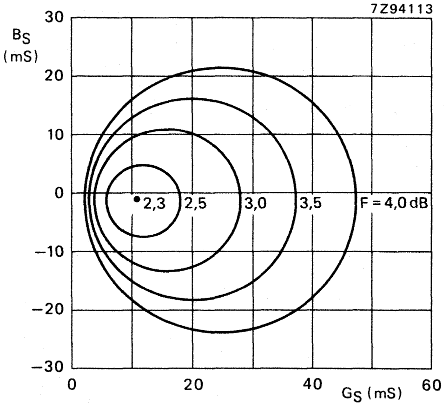

Fig. 6 Circles of constant noise figure; $-V_{CE}$ = 8 V; $-I_C$ = 4 mA; f = 800 MHz; T_{amb} = 25 °C; typical values.

s-parameters (common-emitter) at $-V_{CE}$ = 5 V; T_{amb} = 25 °C; typical values.

I_C mA	f MHz	s_{ie}	s_{fe}	s_{re}	s_{oe}	G_{UM} dB
5	40	0,62/ −21,2°	13,5/167,5°	0,02/ 81,6°	0,96/ −10,3°	36,0
	100	0,58/ −55,1°	11,8/145,8°	0,04/ 67,7°	0,86/ −27,5°	29,0
	200	0,48/ −97,1°	8,4/124,0°	0,07/ 58,2°	0,63/ −41,8°	21,9
	500	0,44/−156,7°	4,3/ 92,0°	0,11/ 53,5°	0,38/ −58,5°	14,2
	800	0,43/+177,0°	2,9/ 76,9°	0,14/ 56,9°	0,31/ −66,6°	10,4
	1000	0,44/+161,3°	2,3/ 67,5°	0,16/ 57,0°	0,28/ −70,4°	8,5
	1200	0,47/+146,3°	1,9/ 61,5°	0,19/ 58,2°	0,24/ −73,8°	7,0
	1500	0,47/+137,8°	1,7/ 52,3°	0,23/ 57,8°	0,22/ −89,5°	5,7
	2000	0,50/+111,7°	1,3/ 40,1°	0,30/ 55,8°	0,20/−115,8°	3,7
10	40	0,38/ −36,0°	20,4/162,3°	0,02/ 79,1°	0,92/ −15,6°	35,0
	100	0,38/ −83,8°	16,0/137,0°	0,03/ 67,2°	0,75/ −37,0°	28,4
	200	0,37/−128,4°	10,4/115,7°	0,05/ 62,9°	0,49/ −51,5°	22,2
	500	0,41/−173,8°	4,8/ 88,3°	0,10/ 64,6°	0,27/ −68,3°	14,7
	800	0,40/+166,0°	3,2/ 75,0°	0,14/ 65,7°	0,22/ −76,5°	11,0
	1000	0,42/+152,8°	2,6/ 66,8°	0,17/ 64,1°	0,19/ −82,2°	9,1
	1200	0,46/+139,3°	2,1/ 61,5°	0,20/ 63,7°	0,15/ −85,2°	7,7
	1500	0,45/+133,5°	1,8/ 52,5°	0,25/ 60,6°	0,16/−104,0°	6,3
	2000	0,48/+108,5°	1,4/ 41,0°	0,32/ 56,2°	0,15/−−135,1°	4,3
15	40	0,25/ −52,3°	23,7/159,6°	0,02/ 77,2°	0,09/ −18,4°	34,5
	100	0,31/−106,0°	17,8/133,2°	0,03/ 68,9°	0,69/ −41,6°	28,2
	200	0,34/−145,3°	11,1/112,6°	0,05/ 67,7°	0,43/ −55,8°	22,3
	500	0,41/+179,3°	4,9/ 87,0°	0,09/ 69,1°	0,23/ −73,6°	14,9
	800	0,40/+161,7°	3,3/ 74,2°	0,15/ 68,6°	0,19/ −82,3°	11,1
	1000	0,42/+149,7°	2,6/ 66,4°	0,18/ 66,4°	0,16/ −89,4°	9,3
	1200	0,46/+136,9°	2,2/ 61,3°	0,20/ 65,4°	0,12/ −93,6°	7,9
	1500	0,45/+131,8°	1,9/ 52,3°	0,26/ 61,7°	0,14/−113,6°	6,5
	2000	0,48/+107,4°	1,5/ 41,1°	0,33/ 56,3°	0,13/−146,5°	4,5
20	40	0,17/ −74,7°	25,4/157,7°	0,01/ 77,9°	0,87/ −20,2°	34,3
	100	0,29/−123,5°	18,6/131,1°	0,03/ 71,0°	0,65/ −44,3°	28,2
	200	0,34/−155,1°	11,4/110,8°	0,04/ 70,9°	0,40/ −58,6°	22,4
	500	0,41/+175,5°	5,0/ 86,3°	0,09/ 71,7°	0,21/ −77,4°	15,0
	800	0,40/+159,3°	3,3/ 73,6°	0,15/ 70,4°	0,18/ −86,2°	11,2
	1000	0,43/+148,0°	2,6/ 66,0°	0,18/ 67,5°	0,15/ −94,7°	9,4
	1200	0,47/+135,6°	2,2/ 61,0°	0,21/ 66,3°	0,11/ −91,0°	8,0
	1500	0,45/+131,0°	1,9/ 52,0°	0,26/ 62,1°	0,13/−120,5°	6,6
	2000	0,48/+107,0°	1,5/ 40,8°	0,33/ 56,4°	0,13/−154,2°	4,6
30	40	0,15/−129,3°	27,2/155,9°	0,01/ 76,8°	0,82/ −22,2°	33,7
	100	0,29/−146,9°	19,3/128,8°	0,02/ 74,2°	0,60/ −47,2°	28,0
	200	0,35/−166,7°	11,5/109,0°	0,04/ 75,3°	0,36/ −61,4°	22,4
	500	0,41/+171,2°	5,0/ 85,3°	0,09/ 74,7°	0,19/ −81,8°	15,0
	800	0,41/+156,7°	3,3/ 72,9°	0,15/ 71,8°	0,16/ −91,0°	11,2
	1000	0,44/+146,2°	2,6/ 65,5°	0,18/ 68,8°	0,19/−101,0°	9,4
	1200	0,48/+134,5°	2,2/ 60,5°	0,21/ 67,3°	0,10/−107,6°	8,0
	1500	0,46/+130,1°	1,9/ 51,5°	0,26/ 62,5°	0,12/−128,1°	6,6
	2000	0,49/+106,4°	1,5/ 40,3°	0,33/ 56,6°	0,12/−162,1°	4,7

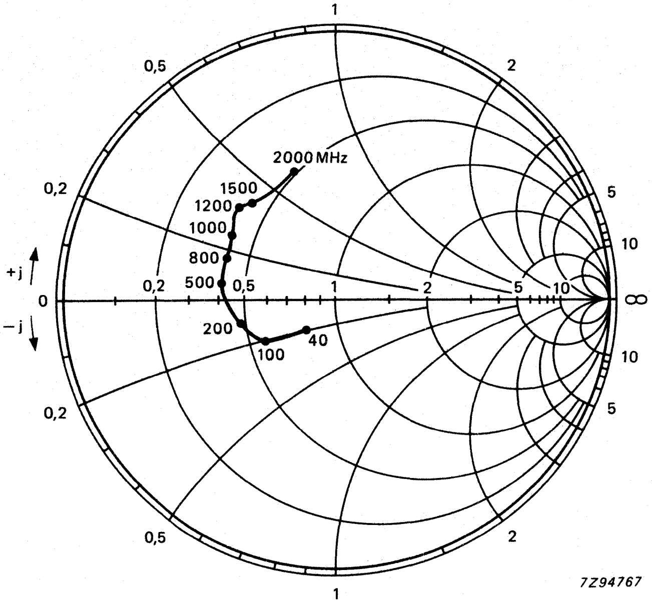

Fig. 7 Input impedance, derived from input reflection coefficient s_{ie} coordinates, in ohm x 50.

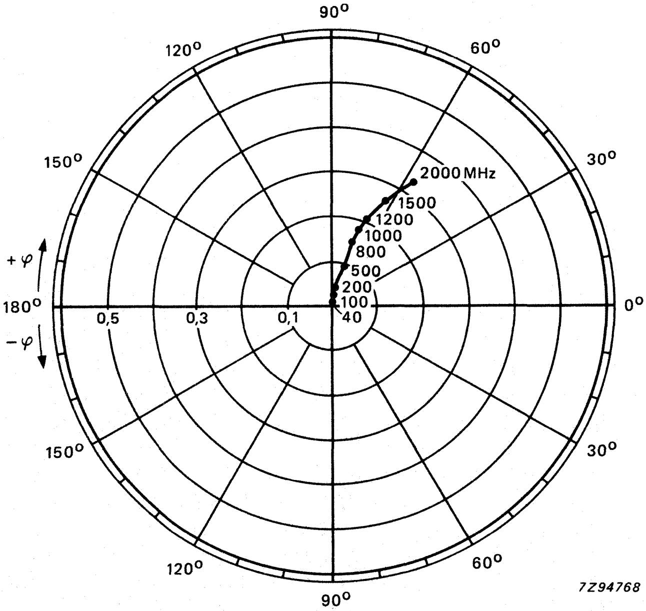

Fig. 8 Reverse transmission coefficient s_{re}.

Conditions for figs 7 to 10: $-V_{CE} = 5$ V; $-I_C = 30$ mA; $T_{amb} = 25$ °C; typical values.

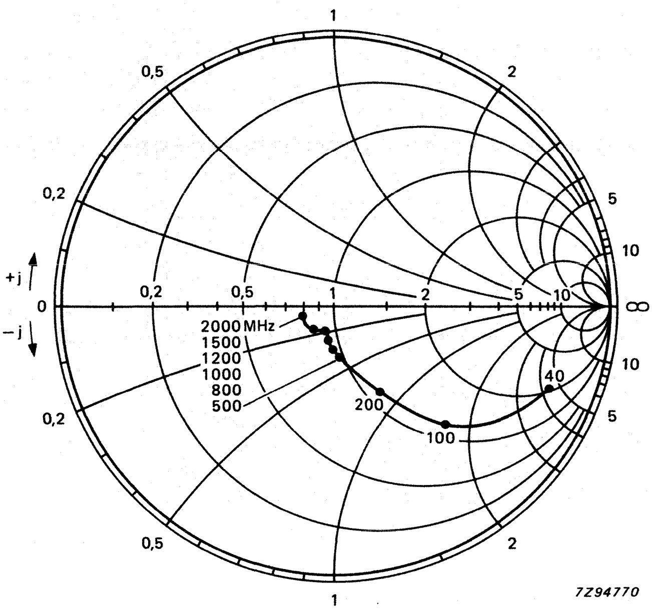

Fig. 9 Output impedance, derived from output reflection coefficient s_{oe} coordinates, in ohm x 50.

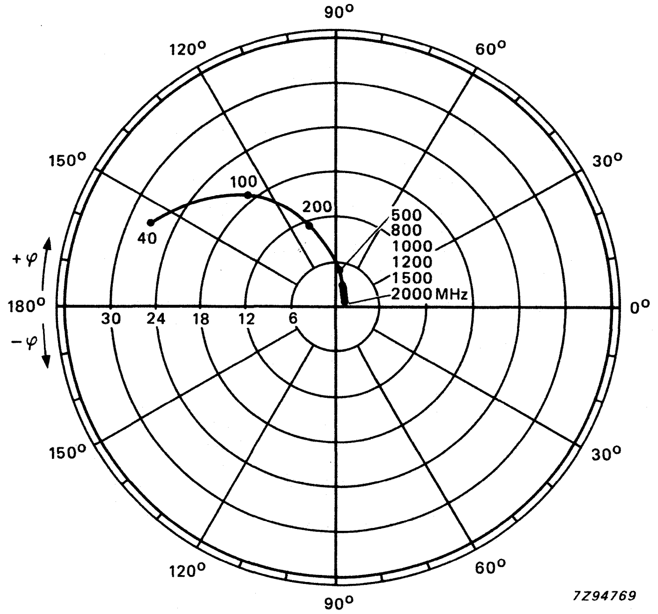

Fig. 10 Forward transmission coefficient s_{fe}.

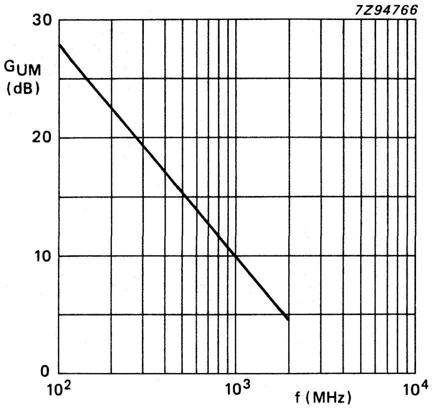

Fig. 11 $-V_{CE} = 5$ V; $-I_C = 30$ mA; $T_{amb} = 25$ °C; typical values.

P-N-P 2 GHz WIDEBAND TRANSISTOR

P-N-P transistor in a sub-miniature HERMETICALLY SEALED micro-stripline envelope. It is primarily intended for use in u.h.f. and microwave amplifiers such as aerial amplifiers, radar systems, oscilloscopes, spectrum analysers etc.

The transistor features low intermodulation distortion and high power gain due to its very high transition frequency, excellent wideband properties and low noise up to high frequencies.

N-P-N complement is BFP91A.

QUICK REFERENCE DATA

Collector-base voltage	$-V_{CBO}$	max.	15	V
Collector-emitter voltage	$-V_{CEO}$	max.	12	V
Collector current (d.c.)	$-I_C$	max.	50	mA
Total power dissipation up to T_{amb} = 105 °C	P_{tot}	max.	350	mW
Junction temperature	T_j	max.	175	°C
D.C. current gain $-I_C$ = 30 mA; $-V_{CE}$ = 5 V	h_{FE}	min.	20	
Transition frequency at f = 500 MHz $-I_C$ = 30 mA; $-V_{CE}$ = 5 V	f_T	typ.	5,0	GHz
Maximum unilateral power gain $-I_C$ = 30 mA; $-V_{CE}$ = 8 V				
at f = 500 MHz	G_{UM}	typ.	20,0	dB
at f = 800 MHz		typ.	16,0	dB

MECHANICAL DATA

SOT-173 (see Fig. 1).

MECHANICAL DATA

Dimensions in mm

Fig. 1 SOT-173.

Marking code: C3

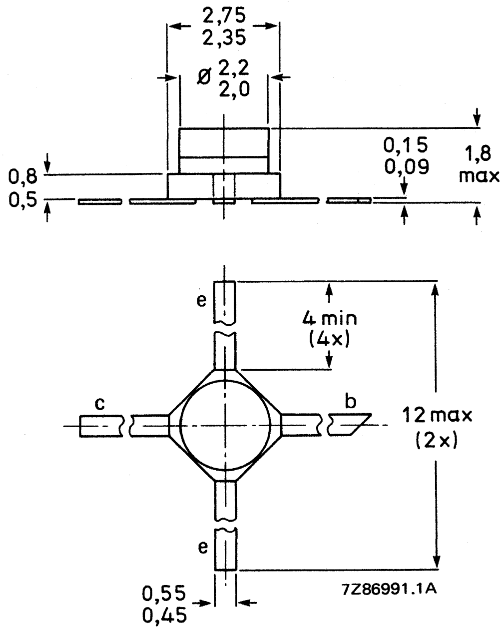

RATINGS

Limiting values in accordance with the Absolute Maximum System (IEC 134)

Collector-base voltage (open emitter)	$-V_{CBO}$	max.	15	V
Collector-emitter voltage (open base)	$-V_{CEO}$	max.	12	V
Emitter-base voltage (open collector)	$-V_{EBO}$	max.	2	V
Collector current (d.c.)	$-I_C$	max.	50	mA
Total power dissipation up to T_{amb} = 105 °C mounted on a ceramic substrate of 0,7 mm x 10 cm^2	P_{tot}	max.	350	mW
Storage temperature	T_{stg}		−65 to +150	°C
Junction temperature	T_j	max.	175	°C

THERMAL RESISTANCE

→ From junction to ambient in free air mounted on a ceramic substrate of 0,7 mm x 10 cm^2	$R_{th\ j\text{-}a}$	200	K/W

CHARACTERISTICS

$T_j = 25\ ^{o}C$ unless otherwise specified

Collector cut-off current				
$I_E = 0; -V_{CB} = 5\ V$	$-I_{CBO}$	max.	50	nA
D.C. current gain				
$-I_C = 30\ mA; -V_{CE} = 5\ V$	h_{FE}	min.	20	
Transition frequency at f = 500 MHz				
$-I_C = 30\ mA; -V_{CE} = 5\ V$	f_T	typ.	5,0	GHz
Collector capacitance at f = 1 MHz				
$I_E = I_e = 0; -V_{CB} = 10\ V$	C_c	typ.	1,0	pF
Emitter capacitance at f = 1 MHz				
$I_C = I_c = 0; -V_{EB} = 0{,}5\ V$	C_e	typ.	1,8	pF
Feedback capacitance at f = 1 MHz				
$I_C = 0; -V_{CE} = 10\ V;$	C_{re}	typ.	0,8	pF

Maximum unilateral power gain (s_{re} assumed to be zero) ←

$$G_{UM} = 10 \log \frac{|s_{fe}|^2}{[1-|s_{ie}|^2]\,[1-|s_{oe}|^2]}$$

at $-I_C = 30\ mA; -V_{CE} = 8\ V; T_{amb} = 25\ ^{o}C;$				
f = 500 MHz	G_{UM}	typ.	20,0	dB
f = 800 MHz		typ.	16,0	dB
Noise figures at f = 800 MHz; Z_S = opt.; $T_{amb} = 25\ ^{o}C$				
$-I_C = 4\ mA; -V_{CE} = 8\ V$	F	typ.	2,3	dB
$-I_C = 30\ mA; -V_{CE} = 8\ V$		typ.	3,7	dB

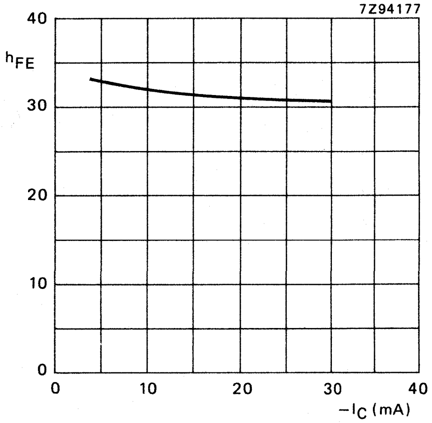

Fig. 2 $-V_{CE}$ = 5 V; T_j = 25 °C; typical values.

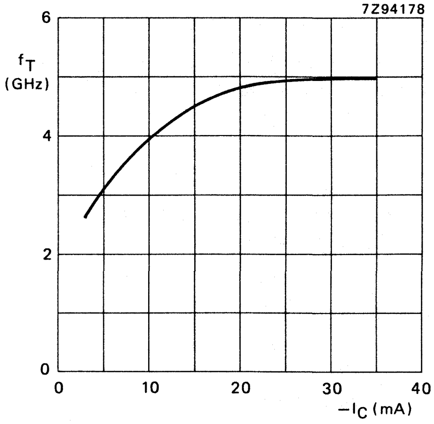

Fig. 3 $-V_{CE}$ = 5 V; f = 500 MHz; T_j = 25 °C; typical values.

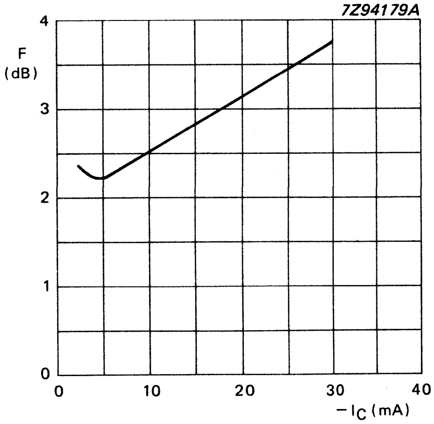

Fig. 4 $-V_{CE}$ = 8 V; f = 800 MHz; T_{amb} = 25 °C; Z_s = optimum; typical values.

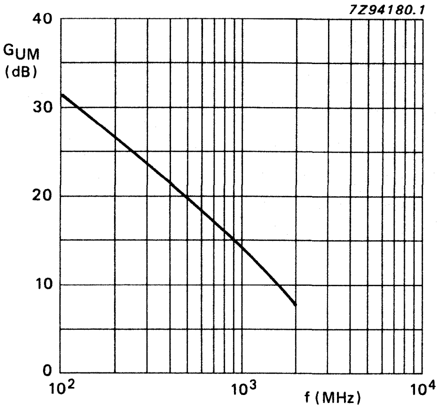

Fig. 5 $-V_{CE}$ = 8 V; $-I_C$ = 30 mA; T_{amb} = 25 °C; typical values.

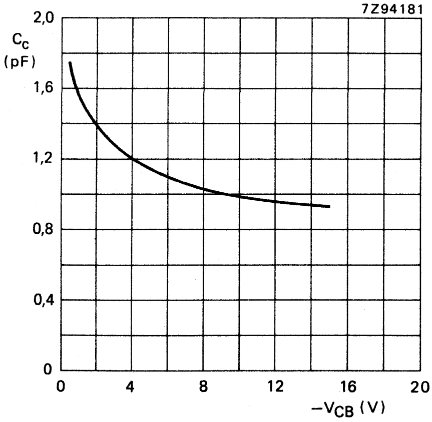

Fig. 6 $I_E = I_e = 0$; f = 1 MHz; T_j = 25 °C; typical values.

s-parameters (common emitter) at $-V_{CE}$ = 8 V; T_{amb} = 25 °C ←

I_C mA	f MHz	s_{ie}	s_{fe}	s_{re}	s_{oe}	G_{UM} dB
2	40	0,84/ −13,4°	6,6/172,9°	0,019/ 82,8°	0,99/ −5,7°	38,7
	100	0,83/ −32,3°	6,4/161,1°	0,047/ 73,3°	0,95/ −14,1°	31,3
	200	0,80/ −60,8°	5,7/143,8°	0,083/ 59,4°	0,87/ −25,7°	25,7
	500	0,74/−114,6°	3,7/112,1°	0,136/ 35,8°	0,66/ −45,8°	17,3
	800	0,71/−142,7°	2,6/ 92,5°	0,149/ 25,7°	0,55/ −54,2°	12,9
	1000	0,68/−154,3°	2,1/ 83,3°	0,153/ 23,1°	0,52/ −58,0°	10,5
	1200	0,67/−164,3°	1,7/ 75,5°	0,153/ 20,8°	0,50/ −62,2°	8,4
	1500	0,65/−178,0°	1,4/ 63,9°	0,156/ 17,3°	0,53/ −65,3°	6,9
	2000	0,66/+165,5°	1,1/ 48,9°	0,154/ 16,4°	0,50/ −75,3°	4,8
5	40	0,66/ −22,5°	13,5/169,4°	0,017/ 79,7°	0,97/ −10,2°	37,4
	100	0,66/ −52,0°	12,4/153,7°	0,039/ 67,5°	0,90/ −24,2°	31,6
	200	0,66/ −89,6°	10,1/132,9°	0,064/ 52,4°	0,74/ −41,3°	26,0
	500	0,68/−141,5°	5,5/103,0°	0,091/ 34,5°	0,46/ −64,5°	18,5
	800	0,67/−162,7°	3,7/ 87,8°	0,100/ 31,9°	0,36/ −72,6°	14,6
	1000	0,66/−172,1°	3,0/ 80,6°	0,106/ 32,6°	0,34/ −75,4°	12,6
	1200	0,67/−179,7°	2,5/ 73,8°	0,111/ 33,0°	0,32/ −79,4°	11,0
	1500	0,63/+168,5°	2,0/ 64,9°	0,122/ 34,1°	0,33/ −76,7°	8,7
	2000	0,64/+155,6°	1,5/ 51,9°	0,136/ 35,6°	0,30/ −84,8°	6,5
10	40	0,47/ −35,4°	20,4/165,5°	0,014/ 76,9°	0,93/ −14,9°	36,0
	100	0,52/ −76,4°	17,7/146,4°	0,032/ 62,8°	0,82/ −33,9°	31,2
	200	0,59/−115,9°	13,1/124,3°	0,048/ 49,2°	0,62/ −54,7°	26,3
	500	0,65/−157,4°	6,4/ 97,9°	0,066/ 40,4°	0,35/ −80,0°	19,1
	800	0,65/−173,4°	4,2/ 84,7°	0,078/ 43,3°	0,27/ −89,0°	15,2
	1000	0,65/+178,9°	3,4/ 78,8°	0,087/ 45,7°	0,24/ −91,3°	13,3
	1200	0,65/+172,9°	2,9/ 72,9°	0,096/ 47,0°	0,23/ −94,9°	11,9
	1500	0,63/+161,2°	2,4/ 65,1°	0,111/ 46,5°	0,23/ −91,9°	10,0
	2000	0,65/+150,1°	1,8/ 53,0°	0,133/ 46,8°	0,20/ −99,0°	7,5
20	40	0,29/ −63,8°	26,8/162,1°	0,012/ 74,1°	0,89/ −19,5°	35,8
	100	0,45/−108,1°	22,0/140,1°	0,025/ 59,7°	0,74/ −43,0°	31,3
	200	0,58/−139,5°	15,1/118,3°	0,036/ 49,0°	0,52/ −66,6°	26,7
	500	0,65/−168,7°	7,0/ 94,6°	0,051/ 47,8°	0,29/ −95,4°	19,7
	800	0,66/−179,3°	4,5/ 82,9°	0,066/ 52,3°	0,22/−106,4°	15,8
	1000	0,66/+173,0°	3,7/ 77,4°	0,077/ 54,7°	0,20/−109,3°	14,0
	1200	0,66/+168,2°	3,1/ 72,0°	0,088/ 55,3°	0,19/−112,9°	12,5
	1500	0,65/+156,7°	2,5/ 64,7°	0,108/ 55,0°	0,18/−107,3°	10,6
	2000	0,66/+146,8°	1,9/ 53,1°	0,132/ 53,4°	0,16/−114,3°	8,1
30	40	0,23/ −93,3°	29,3/160,2°	0,010/ 72,3°	0,86/ −21,6°	35,4
	100	0,45/−125,5°	23,5/137,3°	0,021/ 59,0°	0,70/ −47,1°	31,3
	200	0,58/−149,5°	15,5/115,7°	0,030/ 50,6°	0,48/ −71,6°	26,7
	500	0,66/−173,2°	7,1/ 93,2°	0,046/ 52,8°	0,26/−101,2°	20,0
	800	0,66/+176,4°	4,6/ 81,9°	0,062/ 57,4°	0,21/−112,3°	16,0
	1000	0,66/+170,5°	3,7/ 76,5°	0,074/ 59,1°	0,19/−115,4°	14,0
	1200	0,66/+165,8°	3,1/ 71,1°	0,085/ 59,5°	0,18/−118,5°	12,5
	1500	0,65/+154,9°	2,5/ 63,7°	0,106/ 58,4°	0,16/−113,0°	10,7
	2000	0,66/+145,5°	1,9/ 52,4°	0,132/ 56,3°	0,14/−120,0°	8,1

$-V_{CE}$ = 8 V
$-I_C$ = 30 mA
T_{amb} = 25 °C

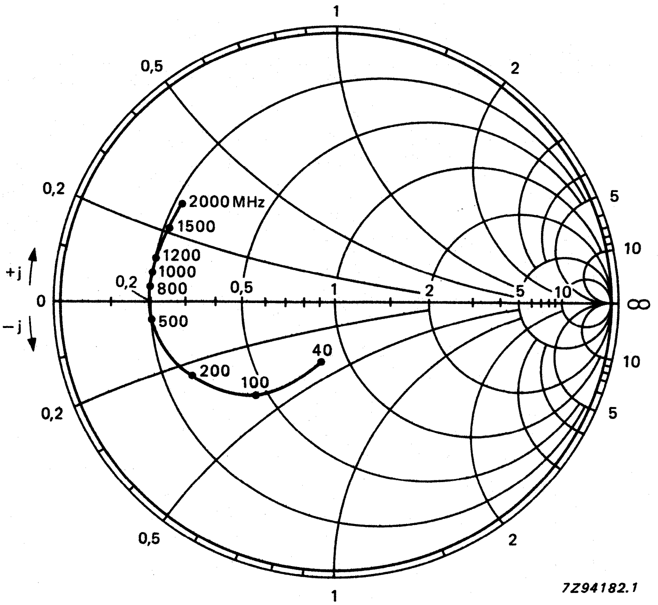

→

Input impedance derived from input reflection coefficient s_{ie} co-ordinates in ohm x 50.

Fig. 7.

$-V_{CE}$ = 8 V
$-I_C$ = 30 mA
T_{amb} = 25 °C

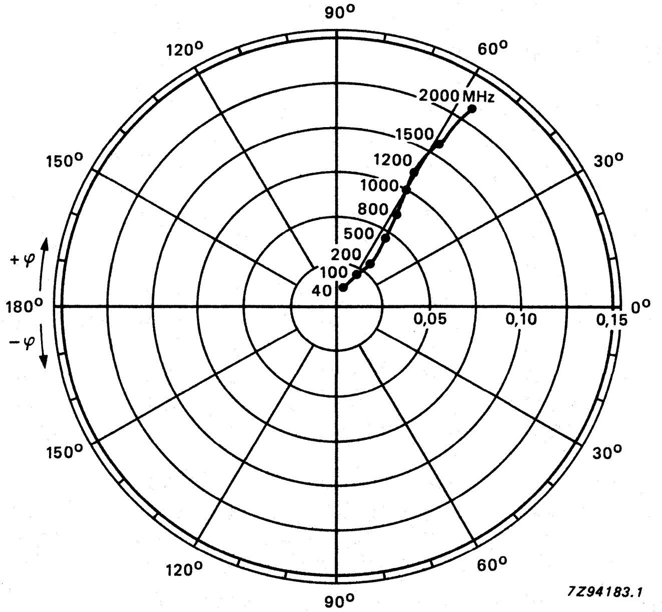

→

Reverse transmission coefficient s_{re}.

Fig. 8.

$-V_{CE}$ = 8 V
$-I_C$ = 30 mA
T_{amb} = 25 °C

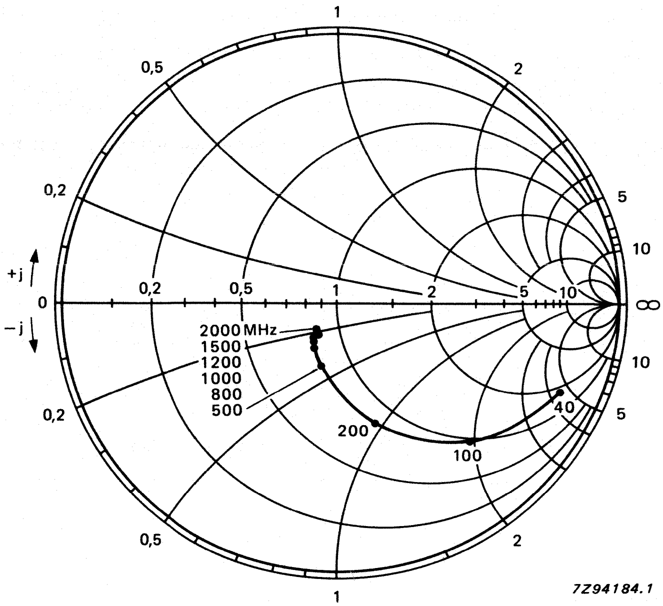

Output impedance derived from output reflection coefficient s_{oe} co-ordinates on ohm x 50.

Fig. 9.

$-V_{CE}$ = 8 V
$-I_C$ = 30 mA
T_{amb} = 25 °C

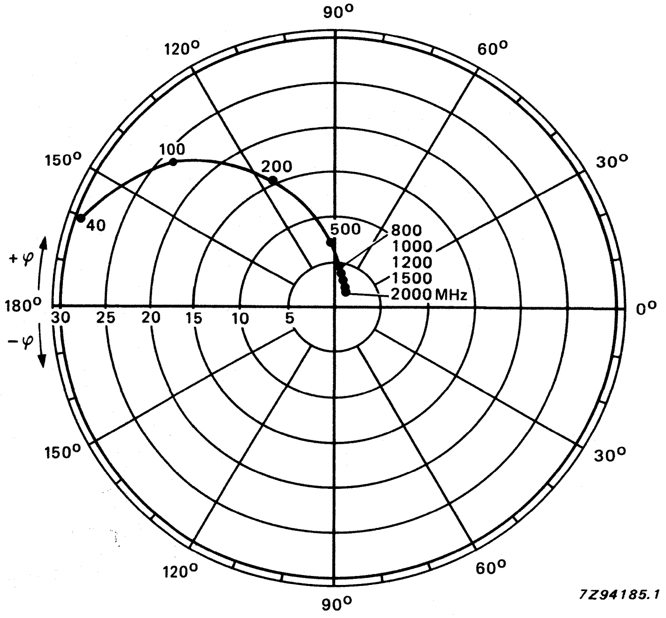

Forward transmission coefficient s_{fe}.

Fig. 10.

P-N-P H.F. WIDEBAND TRANSISTOR

P-N-P transistor in a TO-72 metal envelope with insulated electrodes and a shield lead connected to the case. It is primarily intended for use in u.h.f. and microwave amplifiers such as in aerial amplifiers, radar systems, oscilloscopes, spectrum analysers etc.

The transistor features extremely high power gain coupled with good low noise performance.

N-P-N complement is BFQ22S.

QUICK REFERENCE DATA

Collector-base voltage (open emitter)	$-V_{CBO}$	max.	15	V
Collector-emitter voltage (open base)	$-V_{CEO}$	max.	12	V
Collector current (d.c.)	$-I_C$	max.	35	mA
Total power dissipation up to T_{amb} = 65 °C	P_{tot}	max.	150	mW
Junction temperature	T_j	max.	200	°C
Transition frequency at f = 500 MHz $-I_C$ = 30 mA; $-V_{CE}$ = 5 V	f_T	typ.	5,0	GHz
Feedback capacitance at f = 1 MHz I_C = 0; $-V_{CE}$ = 5 V; T_{amb} = 25 °C	C_{re}	typ.	0,8	pF
Noise figure at optimum source impedance $-I_C$ = 2 mA; $-V_{CE}$ = 5 V; f = 500 MHz	F	typ.	2,4	dB
Maximum unilateral power gain $-I_C$ = 30 mA; $-V_{CE}$ = 5 V; f = 500 MHz	G_{UM}	typ.	15,0	dB

MECHANICAL DATA

Dimensions in mm

Fig. 1 TO-72 with insulated electrodes.

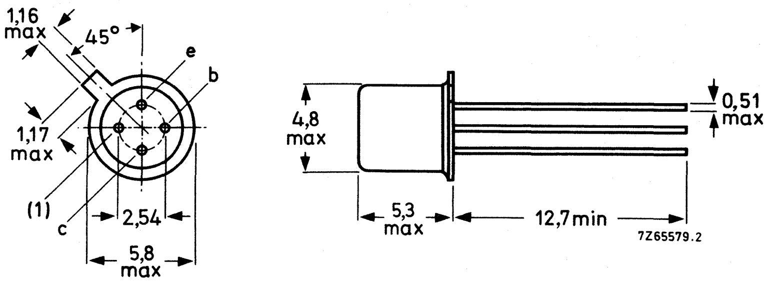

(1) shield lead connected to case.

Accessories: 56246 (distance disc).

RATINGS

Limiting values in accordance with the Absolute Maximum System (IEC 134)

Collector-base voltage (open emitter)	$-V_{CBO}$	max.	15	V
Collector-emitter voltage (open base)	$-V_{CEO}$	max.	12	V
Emitter-base voltage (open collector)	$-V_{EBO}$	max.	2	V
Collector current (d.c.)	$-I_C$	max.	35	mA
Collector current (peak value) at $f > 1$ MHz	$-I_{CM}$	max.	50	mA
Total power dissipation up to $T_{amb} = 65$ °C	P_{tot}	max.	150	mW
Storage temperature	T_{stg}		−65 to +200	°C
Junction temperature	T_j	max.	200	°C

THERMAL RESISTANCE

From junction to ambient in free air	$R_{th\ j\text{-}a}$	=	900	K/W
From junction to case	$R_{th\ j\text{-}c}$	=	600	K/W

CHARACTERISTICS

$T_j = 25$ °C unless otherwise specified

	Collector cut-off current $I_E = 0$; $-V_{CB} = 5$ V	$-I_{CBO}$	max.	50	nA
→	D.C. current gain $-I_C = 30$ mA; $-V_{CE} = 5$ V	h_{FE}	min. typ.	20 50	
→	Transition frequency (note 1) $-I_C = 30$ mA; $-V_{CE} = 5$ V; f = 500 MHz	f_T	typ.	5,0	GHz
→	Collector capacitance (note 2) $I_E = I_e = 0$; $-V_{CB} = 5$ V; f = 1 MHz	C_c	typ.	1,2	pF
	Emitter capacitance $I_C = I_c = 0$; $-V_{EB} = 0{,}5$ V; f = 1 MHz	C_e	typ.	2,5	pF
→	Feedback capacitance (note 1) $I_C = 0$; $-V_{CE} = 5$ V; f = 1 MHz	C_{re}	typ.	0,8	pF
→	Noise figure at optimum source impedance (note 1) $-I_C = 2$ mA; $-V_{CE} = 5$ V; f = 500 MHz; $T_{amb} = 25$ °C	F	typ.	2,4	dB
→	Maximum unilateral power gain (note 1) s_{re} assumed to be zero $G_{UM} = 10 \log \frac{\lvert s_{fe}\rvert^2}{[1-\lvert s_{ie}\rvert^2]\,[1-\lvert s_{oe}\rvert^2]}$ $-I_C = 30$ mA; $-V_{CE} = 5$ V; f = 500 MHz; $T_{amb} = 25$ °C	G_{UM}	typ.	15,0	dB

Notes

→ 1. Shield lead grounded.

2. Shield lead not connected.

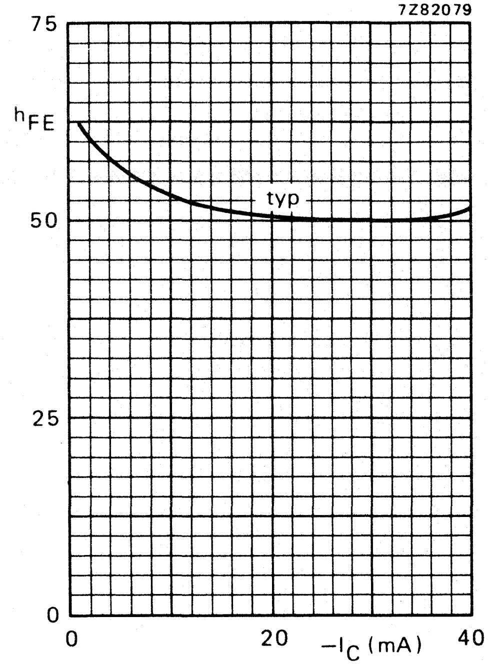

Fig. 2 $-V_{CE}$ = 5 V; T_j = 25 °C; typical values.

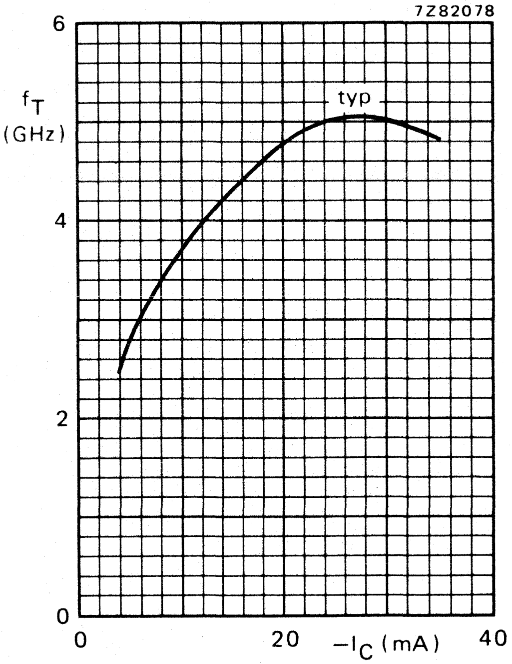

Fig. 3 $-V_{CE}$ = 5 V; f = 500 MHz; T_j = 25 °C; typical values.

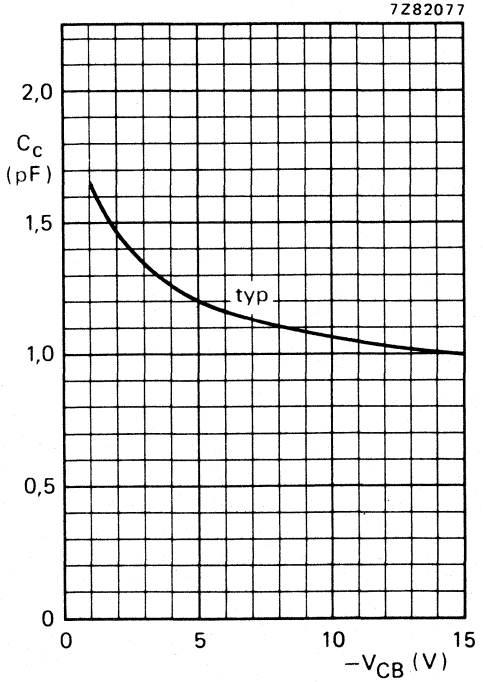

Fig. 4 $I_E = I_e = 0$; f = 1 MHz; T_j = 25 °C; typical values.

P-N-P 1 GHz WIDEBAND TRANSISTOR

P-N-P transistor in a plastic SOT-37 envelope.

It is intended for use in u.h.f. applications such as broadband aerial amplifiers (30 MHz to 860 MHz) and in microwave amplifiers such as radar systems, spectrum analysers etc.

The BFQ32 offers a high transition frequency and a low intermodulation distortion figure over a wide current range.

N-P-N complement is BFR96.

QUICK REFERENCE DATA

Collector-base voltage (open emitter)	$-V_{CBO}$	max.	20	V
Collector-emitter voltage (open base)	$-V_{CEO}$	max.	15	V
Collector current (d.c.)	$-I_C$	max.	75	mA
Total power dissipation up to T_{amb} = 60 °C	P_{tot}	max.	500	mW
Junction temperature	T_j	max.	175	°C
Transition frequency at f = 500 MHz $-I_C$ = 50 mA; $-V_{CE}$ = 10 V	f_T	min.	3,6	GHz
Feedback capacitance at f = 1 MHz $-I_C$ = 10 mA; $-V_{CE}$ = 10 V	C_{re}	max.	1,4	pF
Noise figure at optimum source impedance $-I_C$ = 50 mA; $-V_{CE}$ = 10 V; f = 500 MHz	F	typ.	3,75	dB
Output voltage at d_{im} = −60 dB $-I_C$ = 50 mA; $-V_{CE}$ = 10 V; R_L = 75 Ω; $f_{(p+q-r)}$ = 493,25 MHz	V_o	typ.	500	mV

MECHANICAL DATA

Dimensions in mm

Fig. 1 SOT-37.

Connections

1. Base
2. Emitter
3. Collector

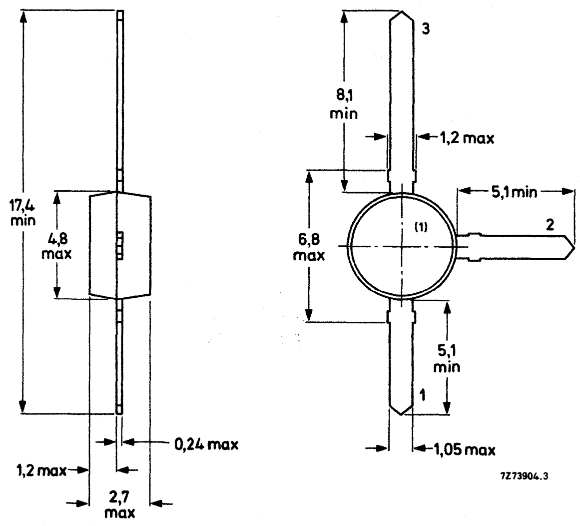

(1) = type number marking.

RATINGS

Limiting values in accordance with the Absolute Maximum System (IEC 134)

Collector-base voltage (open emitter)	$-V_{CBO}$	max.	20	V
Collector-emitter voltage (open base)	$-V_{CEO}$	max.	15	V
Emitter-base voltage (open collector)	$-V_{EBO}$	max.	3	V
Collector current (d.c.)	$-I_C$	max.	75	mA
Collector current (peak value); $f > 1$ MHz	$-I_{CM}$	max.	150	mA
Total power dissipation up to $T_{amb} = 60$ °C mounted on a fibre-glass print of 40 mm x 25 mm x 1 mm	P_{tot}		500	mW
Storage temperature	T_{stg}	−65 to + 175		°C
Junction temperature	T_j	max.	175	°C

THERMAL RESISTANCE

From junction to ambient in free air mounted on a fibre-glass print of 40 mm x 25 mm x 1 mm	$R_{th\ j\text{-}a}$	=	230	K/W

CHARACTERISTICS

→ $T_j = 25$ °C unless otherwise specified

Collector cut-off current $I_E = 0$; $-V_{CB} = 10$ V	$-I_{CBO}$	max.	100	nA
→ D.C. current gain				
$-I_C = 50$ mA; $-V_{CE} = 10$ V	h_{FE}	min.	20	
$-I_C = 75$ mA; $-V_{CE} = 10$ V	h_{FE}	min.	20	
→ Transition frequency at $f = 500$ MHz				
$-I_C = 50$ mA; $-V_{CE} = 10$ V	f_T	min. typ	3,6 4,2	GHz GHz
$-I_C = 75$ mA; $-V_{CE} = 10$ V	f_T	min. typ	4,0 4,6	GHz GHz
Collector capacitance at $f = 1$ MHz $I_E = I_e = 0$; $-V_{CB} = 10$ V	C_c	typ	1,3	pF
Emitter capacitance at $f = 1$ MHz $I_C = I_c = 0$; $-V_{EB} = 0{,}5$ V	C_e	typ	6	pF
Feedback capacitance at $f = 1$ MHz $-I_C = 10$ mA; $-V_{CE} = 10$ V	C_{re}	max. typ	1,4 1,25	pF pF

Noise figure at optimum source impedance
$-I_C = 50$ mA; $-V_{CE} = 10$ V; f = 500 MHz; $T_{amb} = 25$ °C F typ. 3,75 dB ←

Maximum unilateral power gain (s_{re} assumed to be zero)

$$G_{UM} = 10 \log \frac{|s_{fe}|^2}{[1-|s_{ie}|^2]\,[1-|s_{oe}|^2]}$$

$-I_C = 50$ mA; $-V_{CE} = 10$ V; f = 500 MHz; $T_{amb} = 25$ °C G_{UM} typ. 14,0 dB ←

Output voltage at $d_{im} = -60$ dB
$-I_C = 50$ mA; $-V_{CE} = 10$ V; ←
$R_L = 75\ \Omega$; $T_{amb} = 25$ °C

$V_p = V_o$ at $d_{im} = -60$ dB ; $f_p = 495{,}25$ MHz
$V_q = V_o - 6$ dB ; $f_q = 503{,}25$ MHz
$V_r = V_o - 6$ dB ; $f_r = 505{,}25$ MHz

measured at $f_{(p+q-r)} = 495{,}25$ MHz V_o typ. 500 mV

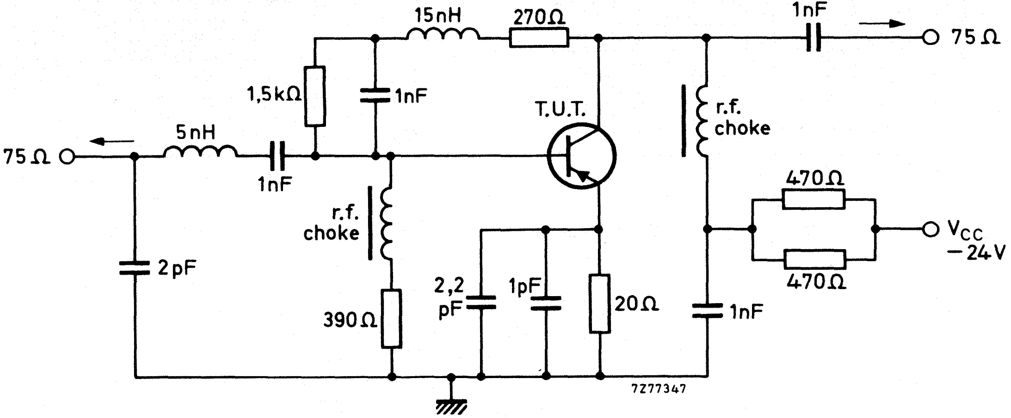

Fig. 2 Intermodulation test circuit.

→

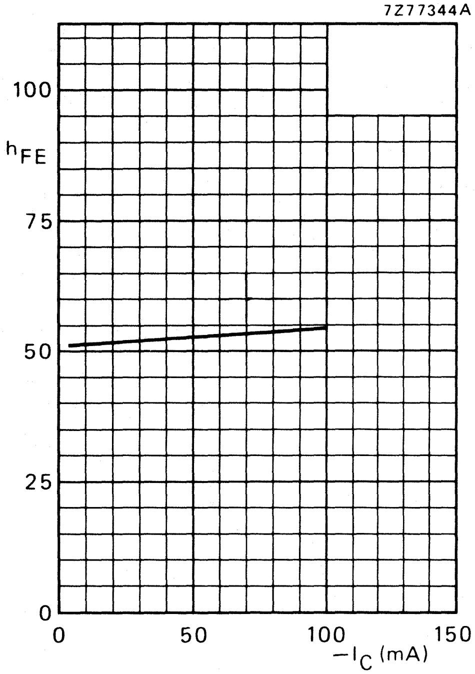

Fig. 3 $-V_{CE} = 10$ V; $T_j = 25$ °C; typical values.

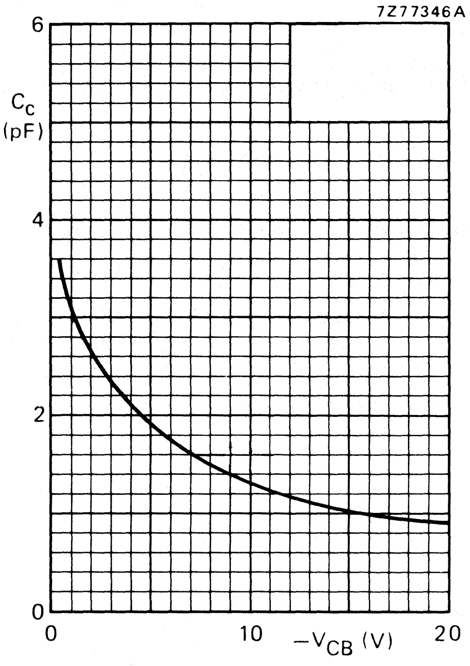

Fig. 4 $I_E = i_e = 0$; f = 1 MHz; $T_j = 25$ °C; typical values.

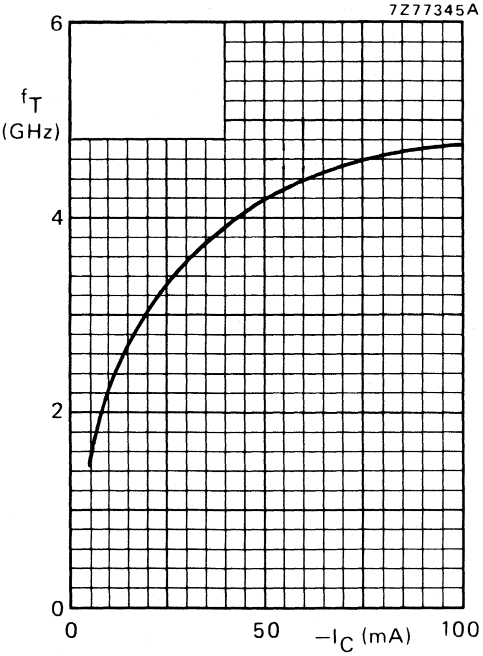

Fig. 5 $-V_{CE} = 10$ V; f = 500 MHz; $T_j = 25$ °C; typical values.

P-N-P 2 GHz WIDEBAND TRANSISTOR

P-N-P transistor in a sub-miniature HERMETICALLY SEALED micro-stripline envelope. It is intended for use in u.h.f. applications such as broadband aerial amplifiers. Microwave applications include radar systems, spectrum analysers etc.

The BFQ32C features a high transition frequency and a low intermodulation distortion figure over a wide current range.

N-P-N complement is BFP96.

QUICK REFERENCE DATA

Collector-base voltage	$-V_{CBO}$	max.	20	V
Collector-emitter voltage	$-V_{CEO}$	max.	15	V
Collector current (d.c.)	$-I_C$	max.	100	mA
Total power dissipation up to T_{amb} = 75 °C	P_{tot}	max.	500	mW
Junction temperature	T_j	max.	175	°C
D.C. current gain $-I_C$ = 50 mA; $-V_{CE}$ = 10 V	h_{FE}	min.	20	
Transition frequency at f = 500 MHz $-I_C$ = 50 mA; $-V_{CE}$ = 10 V	f_T	typ.	4,5	GHz
Maximum unilateral power gain $-I_C$ = 50 mA; $-V_{CE}$ = 10 V				
at f = 500 MHz	G_{UM}	typ.	18,0	dB
at f = 800 MHz		typ.	14,0	dB

MECHANICAL DATA

SOT-173 (see Fig. 1).

MECHANICAL DATA

Dimensions in mm

Fig. 1 SOT-173.

Marking code: C2

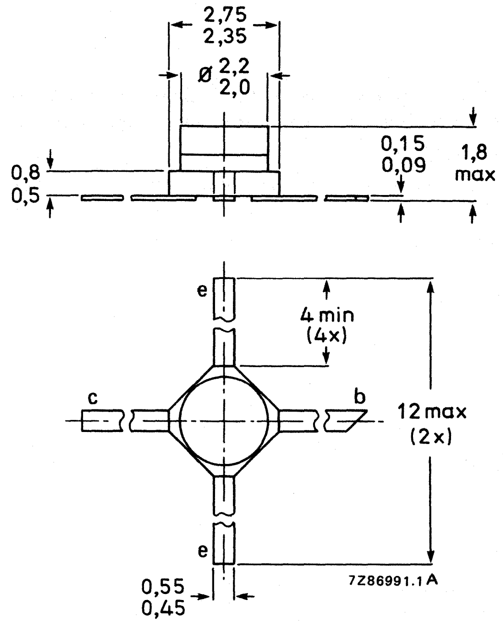

RATINGS

Limiting values in accordance with the Absolute Maximum System (IEC 134)

Collector-base voltage (open emitter)	$-V_{CBO}$	max.	20	V
Collector-emitter voltage (open base)	$-V_{CEO}$	max.	15	V
Emitter-base voltage (open collector)	$-V_{EBO}$	max.	3	V
Collector current (d.c.)	$-I_C$	max.	100	mA
Total power dissipation up to T_{amb} = 75 °C mounted on a ceramic substrate of 0,7 mm x 10 cm^2	P_{tot}	max.	500	mW
Storage temperature	T_{stg}		−65 to +150	°C
Junction temperature	T_j	max.	175	°C

THERMAL RESISTANCE

From junction to ambient in free air, mounted on a ceramic substrate of 0,7 mm x 10 cm^2	$R_{th\ j\text{-}a}$	200	K/W

CHARACTERISTICS

$T_j = 25\ ^{o}C$ unless otherwise specified

Collector cut-off current $I_E = 0; -V_{CB} = 10\ V$	$-I_{CBO}$	max.	100	nA
D.C. current gain $-I_C = 50\ mA; -V_{CE} = 10\ V$	h_{FE}	min.	20	
Transition frequency at f = 500 MHz $-I_C = 50\ mA; -V_{CE} = 10\ V$	f_T	typ.	4,5	GHz
Collector capacitance at f = 1 MHz $I_E = I_e = 0; -V_{CB} = 10\ V$	C_c	typ.	1,9	pF
Emitter capacitance at f = 1 MHz $I_C = I_c = 0; -V_{EB} = 0,5\ V$	C_e	typ.	5,0	pF
Feedback capacitance at f = 1 MHz $I_C = 0; -V_{CE} = 10\ V$	C_{re}	typ.	1,4	pF

Maximum unilateral power gain (s_{re} assumed to be zero)

$$G_{UM} = 10 \log \frac{|s_{fe}|^2}{[1-|s_{ie}|^2]\,[1-|s_{oe}|^2]}$$ ←

at $-I_C = 50\ mA; -V_{CE} = 10\ V; T_{amb} = 25\ ^{o}C$					
f = 500 MHz	G_{UM}	typ.	18,0	dB	
f = 800 MHz		typ.	14,0	dB	
Noise figures at f = 800 MHz; Z_S = opt.; $T_{amb} = 25\ ^{o}C$; $-I_C = 50\ mA; -V_{CE} = 10\ V$	F	typ.	4,3	dB	←

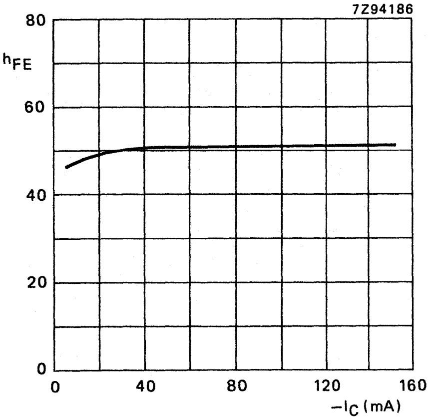

→ Fig. 2 $-V_{CE} = 10$ V; $T_j = 25$ °C; typical values.

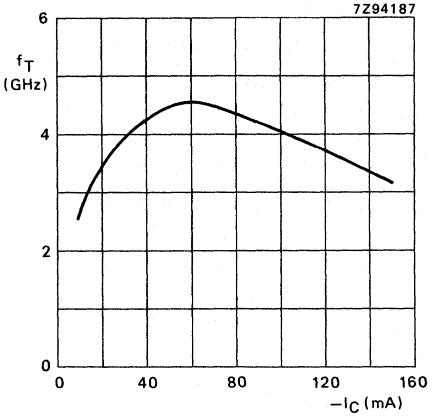

Fig. 3 $-V_{CE} = 10$ V; f = 500 MHz; $T_j = 25$ °C; typical values.

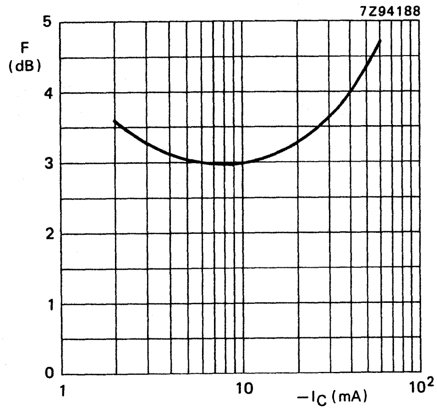

→ Fig. 4 $-V_{CE} = 10$ V; f = 800 MHz; $T_{amb} = 25$ °C; Z_s = optimum; typical values.

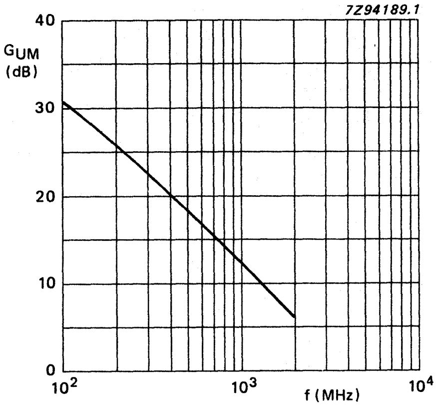

Fig. 5 $-V_{CE} = 10$ V; $-I_C = 50$ mA; $T_{amb} = 25$ °C; typical values.

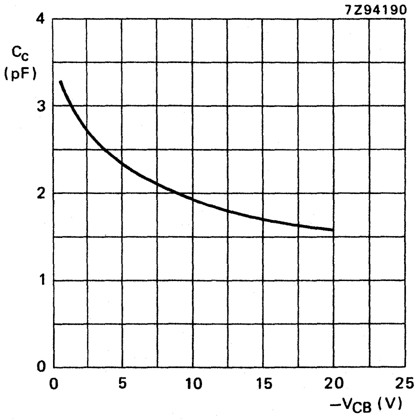

→ Fig. 6 $I_E = I_e = 0$; f = 1 MHz; $T_j = 25$ °C; typical values.

s-parameters (common emitter) at $-V_{CE}$ = 10 V; T_{amb} = 25 °C; typical values.

I_C mA	f MHz	s_{ie}	s_{fe}	s_{re}	s_{oe}	G_{UM} dB
10	40	0,49/ −69,3°	20,4/153,8°	0,023/ 66,3°	0,88/ −26,1°	33,9
	100	0,64/−117,9°	14,7/127,8°	0,042/ 45,4°	0,65/ −51,6°	28,0
	200	0,72/−148,5°	8,8/107,1°	0,051/ 33,3°	0,41/ −70,4°	22,9
	500	0,76/−173,5°	3,8/ 85,3°	0,061/ 32,9°	0,26/ −88,9°	15,6
	800	0,76/+176,5°	2,4/ 73,4°	0,071/ 38,7°	0,25/ −96,4°	11,6
	1000	0,76/+171,4°	2,0/ 66,9°	0,079/ 42,5°	0,26/−100,5°	10,1
	1200	0,76/+167,0°	1,7/ 60,7°	0,087/ 45,0°	0,27/−105,9°	8,7
	1500	0,73/+157,7°	1,3/ 51,6°	0,111/ 50,7°	0,29/−102,5°	6,0
	2000	0,75/+147,2°	1,0/ 39,5°	0,136/ 53,3°	0,31/−115,7°	3,9
15	40	0,45/ −81,6°	24,5/151,2°	0,021/ 64,7°	0,85/ −31,0°	34,5
	100	0,62/−127,4°	16,6/124,3°	0,036/ 44,9°	0,60/ −60,6°	28,4
	200	0,71/−154,0°	9,8/105,7°	0,044/ 36,4°	0,38/ −83,1°	23,5
	500	0,75/−176,8°	4,2/ 85,4°	0,057/ 40,7°	0,24/−106,2°	16,1
	800	0,75/+174,1°	2,6/ 72,9°	0,071/ 46,8°	0,22/−113,4°	12,2
	1000	0,74/+168,5°	2,2/ 67,6°	0,083/ 50,1°	0,22/−115,9°	10,3
	1200	0,74/+164,4°	1,8/ 61,9°	0,093/ 51,9°	0,23/−120,1°	8,9
	1500	0,73/+156,9°	1,5/ 54,1°	0,114/ 54,3°	0,26/−122,0°	7,0
	2000	0,76/+147,5°	1,1/ 42,1°	0,138/ 54,7°	0,28/−131,5°	5,0
20	40	0,42/ −95,3°	27,9/148,7°	0,019/ 63,2°	0,83/ −35,6°	34,8
	100	0,63/−136,0°	18,1/121,9°	0,032/ 44,6°	0,56/ −68,5°	29,0
	200	0,71/−158,8°	10,5/104,2°	0,039/ 38,7°	0,36/ −94,6°	24,1
	500	0,74/−178,8°	4,4/ 85,3°	0,053/ 45,7°	0,20/−117,4°	16,6
	800	0,74/+173,0°	2,8/ 73,5°	0,070/ 51,6°	0,23/−129,4°	12,7
	1000	0,74/+167,6°	2,3/ 68,5°	0,083/ 54,4°	0,22/−131,6°	10,8
	1200	0,74/+163,5°	1,9/ 63,0°	0,094/ 55,6°	0,23/−134,6°	9,4
	1500	0,73/+156,7°	1,6/ 55,2°	0,116/ 56,7°	0,23/−137,0°	7,5
	2000	0,75/+147,3°	1,2/ 43,4°	0,142/ 55,8°	0,25/−145,7°	5,4
30	40	0,42/−120,4°	32,2/145,8°	0,016/ 61,2°	0,79/ −42,2°	35,2
	100	0,65/−148,4°	20,1/119,5°	0,025/ 44,4°	0,53/ −80,2°	29,9
	200	0,73/−165,5°	11,3/102,0°	0,031/ 41,5°	0,36/−111,0°	25,0
	500	0,76/+179,3°	4,7/ 84,6°	0,046/ 51,1°	0,27/−141,8°	17,5
	800	0,76/+172,1°	3,0/ 74,7°	0,064/ 56,4°	0,26/−150,4°	13,6
	1000	0,76/+167,5°	2,4/ 69,5°	0,077/ 58,5°	0,25/−153,6°	11,6
	1200	0,76/+163,8°	2,0/ 64,5°	0,088/ 59,0°	0,25/−156,1°	10,0
	1500	0,74/+155,7°	1,7/ 56,8°	0,119/ 59,7°	0,24/−150,9°	8,1
	2000	0,76/+146,1°	1,3/ 45,3°	0,146/ 57,8°	0,25/−157,6°	6,0
50	40	0,46/−137,3°	36,6/141,9°	0,013/ 58,9°	0,73/ −50,0°	35,6
	100	0,68/−157,1°	21,5/116,3°	0,020/ 45,6°	0,49/ −92,1°	30,5
	200	0,74/−170,4°	11,8/100,1°	0,026/ 46,9°	0,36/−124,6°	25,5
	500	0,76/−177,5°	4,9/ 84,0°	0,043/ 57,7°	0,30/−153,4°	18,0
	800	0,76/+171,0°	3,1/ 74,9°	0,063/ 61,4°	0,28/−161,8°	14,0
	1000	0,76/+166,6°	2,5/ 69,8°	0,076/ 62,5°	0,27/−165,5°	12,0
	1200	0,76/+162,9°	2,1/ 64,9°	0,089/ 62,4°	0,27/−168,1°	10,5
	1500	0,74/+155,2°	1,7/ 57,6°	0,123/ 61,0°	0,23/−165,0°	8,2
	2000	0,76/+146,1°	1,3/ 46,7°	0,151/ 58,4°	0,23/−172,4°	6,2

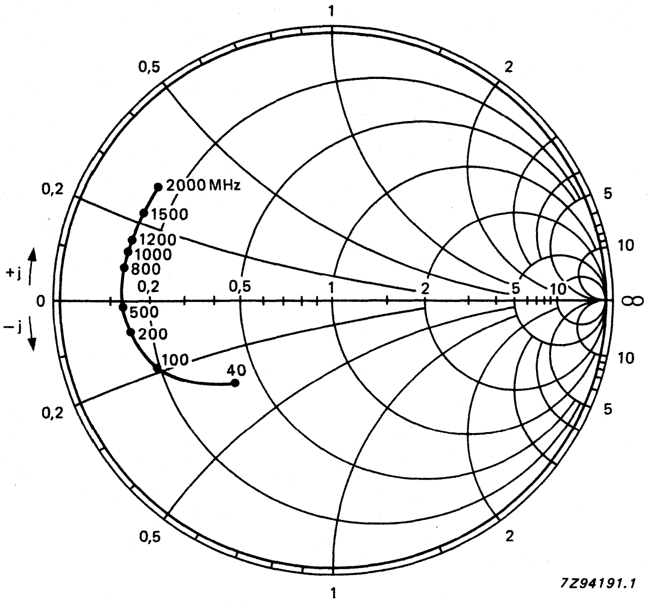

Fig. 7 $-V_{CE} = 10$ V; $-I_C = 50$ mA; $T_{amb} = 25$ °C; typical values.

Input impedance derived from input reflection coefficient s_{ie} co-ordinates in ohm x 50.

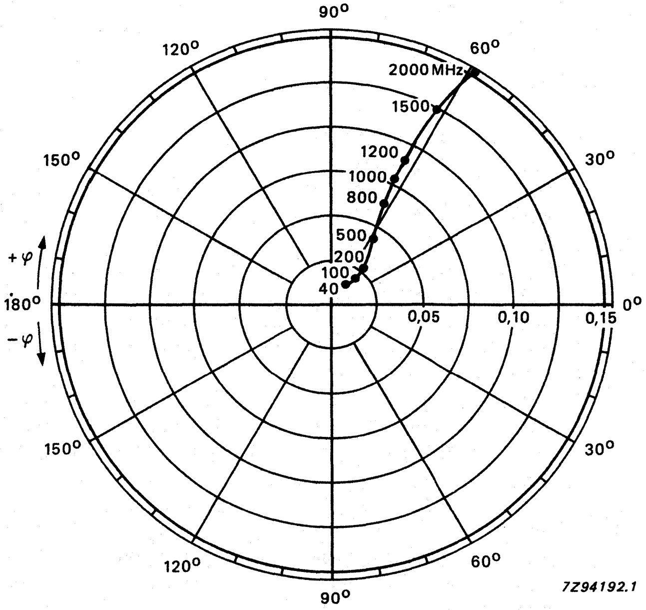

Fig. 8 $-V_{CE} = 10$ V; $-I_C = 50$ mA; $T_{amb} = 25$ °C; typical values.

→ Reverse transmission coefficient s_{re}.

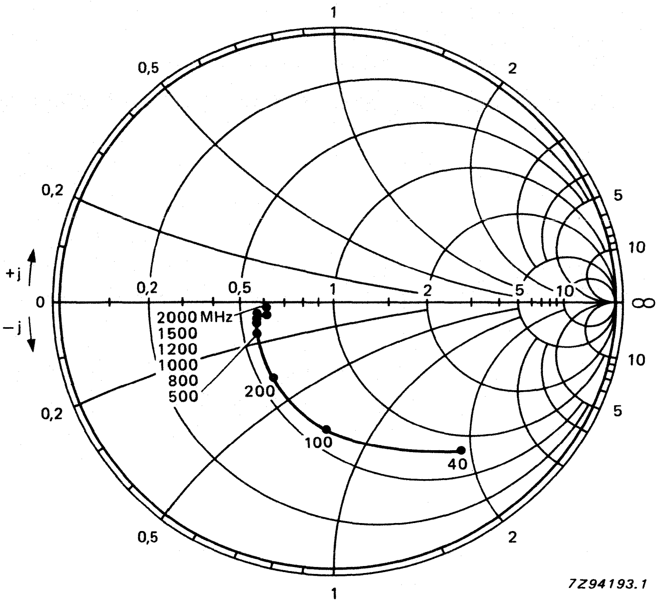

Fig. 9 $-V_{CE}$ = 10 V; $-I_C$ = 50 mA; T_{amb} = 25 °C; typical values.

Output impedance derived from output reflection coefficient s_{oe} co-ordinates in ohm x 50.

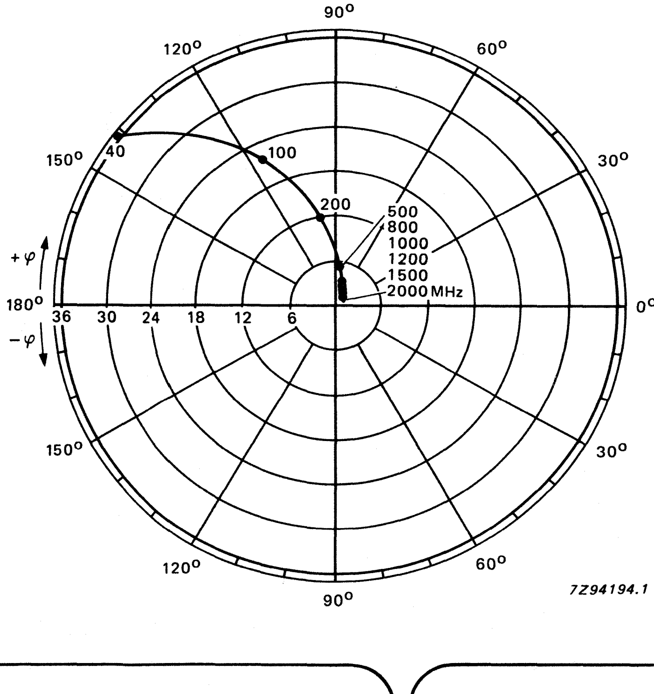

Fig. 10 $-V_{CE}$ = 10 V; $-I_C$ = 50 mA; T_{amb} = 25 °C; typical values.

Forward transmission coefficient s_{fe}.

P-N-P H.F. WIDEBAND TRANSISTOR

←

P-N-P transistor in a TO-72 metal envelope with insulated electrodes and a shield lead connected to the case. It is primarily intended for use in u.h.f. and microwave amplifiers such as aerial amplifiers, radar systems, oscilloscopes, spectrum analysers etc.

The transistor features high power gain, high transition frequency and low noise up to high frequencies.

N-P-N complement is BFQ63.

QUICK REFERENCE DATA

Collector-base voltage (open emitter)	$-V_{CBO}$	max.	20	V
Collector-emitter voltage (open base)	$-V_{CEO}$	max.	15	V
Collector current (d.c.)	$-I_C$	max.	75	mA
Total power dissipation up to T_{amb} = 50 °C	P_{tot}	max.	250	mW
Junction temperature	T_j	max.	200	°C
Transition frequency at f = 500 MHz $-I_C$ = 50 mA; $-V_{CE}$ = 5 V	f_T	typ.	4,5	GHz
Feedback capacitance at f = 1 MHz $-I_C$ = 10 mA; $-V_{CE}$ = 10 V	C_{re}	typ.	1,4	pF
Noise figure at optimum source impedance $-I_C$ = 10 mA; $-V_{CE}$ = 5 V; f = 200 MHz	F	typ.	1,9	dB
Maximum unilateral power gain $-I_C$ = 20 mA; $-V_{CE}$ = 5 V; f = 200 MHz	G_{UM}	typ.	18,0	dB

MECHANICAL DATA

Dimensions in mm

Fig. 1 TO-72 with insulated electrodes.

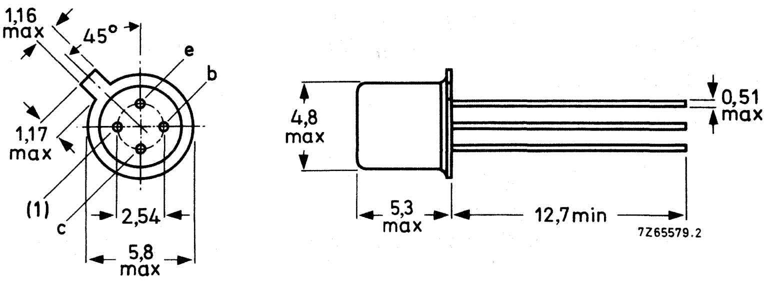

(1) Shield lead connected to case.

Accessories: 56246 (distance disc).

RATINGS

Limiting values in accordance with the Absolute Maximum System (IEC 134)

Collector-base voltage (open emitter)	$-V_{CBO}$	max.	20	V
Collector-emitter voltage (open base)	$-V_{CEO}$	max.	15	V
Emitter-base voltage (open collector)	$-V_{EBO}$	max.	3	V
Collector current (d.c.)	$-I_C$	max.	75	mA
Collector current (peak value) at $f > 1$ MHz	$-I_{CM}$	max.	150	mA
Total power dissipation up to $T_{amb} = 50\ ^oC$	P_{tot}	max.	250	mW
Storage temperature	T_{stg}	−65 to	+ 200	°C
Junction temperature	T_j	max.	200	°C

THERMAL RESISTANCE

From junction to ambient in free air	$R_{th\ j\text{-}a}$	=	600	K/W
From junction to case	$R_{th\ j\text{-}c}$	=	350	K/W

CHARACTERISTICS

$T_j = 25\ ^oC$ unless otherwise specified

Collector cut-off current				
$-I_E = 0$; $-V_{CB} = 10$ V	$-I_{CBO}$	max.	100	nA
D.C. current gain				
$-I_C = 20$ mA; $-V_{CE} = 5$ V	h_{FE}	min.	20	
$-I_C = 50$ mA; $-V_{CE} = 5$ V	h_{FE}	min.	20	
Transition frequency (note 1)				
$-I_C = 50$ mA; $-V_{CE} = 5$ V; f = 500 MHz	f_T	typ.	4,5	GHz
Collector capacitance (note 2)				
$I_E = i_e = 0$; $-V_{CB} = 10$ V; f = 1 MHz	C_c	typ.	1,8	pF
Emitter capacitance				
$I_C = i_c = 0$; $-V_{EB} = 0,5$ V; f = 1 MHz	C_e	typ.	0,4	pF
Feedback capacitance (note 1)				
$-I_C = 10$ mA; $-V_{CE} = 10$ V; f = 1 MHz; $T_{amb} = 25\ ^oC$	C_{re}	typ.	1,4	pF
Noise figure at optimum source impedance (note 1)				
$-I_C = 10$ mA; $-V_{CE} = 5$ V; f = 200 MHz; $T_{amb} = 25\ ^oC$	F	typ.	1,9	dB
$-I_C = 10$ mA; $-V_{CE} = 5$ V; f = 500 MHz; $T_{amb} = 25\ ^oC$	F	typ.	2,3	dB

Maximum unilateral power gain (note 1)
s_{re} assumed to be zero

$$G_{UM} = 10 \log \frac{|s_{fe}|^2}{(1 - |s_{ie}|^2)\,(1 - |s_{oe}|^2)}$$

$-I_C = 20$ mA; $-V_{CE} = 5$ V; f = 200 MHz; $T_{amb} = 25\ ^oC$	G_{UM}	typ.	18,0	dB
$-I_C = 50$ mA; $-V_{CE} = 5$ V; f = 500 MHz; $T_{amb} = 25\ ^oC$	G_{UM}	typ.	11,0	dB

Notes

1. Shield lead grounded.
2. Shield lead and emitter lead connected to bridge earth.

P-N-P 1 GHz WIDEBAND TRANSISTOR ←

P-N-P transistor in a plastic SOT-37 envelope.

It is intended for use in u.h.f. applications such as broadcast aerial amplifiers and in microwave amplifiers such as radar systems, spectrum analysers etc.

The BFQ32S offers a high transition frequency and a low modulation distortion figure over a wide current range.

N-P-N complement is BFR96S. ←

QUICK REFERENCE DATA

Collector-base voltage (open emitter)	$-V_{CBO}$	max.	20	V	
Collector-emitter voltage (open base)	$-V_{CEO}$	max.	15	V	
Collector current (d.c.)	$-I_C$	max.	100	mA	
Total power dissipation up to T_{amb} = 70 °C	P_{tot}	max.	700	mW	
Junction temperature	T_j	max.	175	°C	
Transition frequency at f = 500 MHz $-I_C$ = 70 mA; $-V_{CE}$ = 10 V	f_T	typ.	4,5	GHz	
Output voltage at d_{im} = −60 dB $-I_C$ = 70 mA; $-V_{CE}$ = 10 V $f_{(p+q-r)}$ = 793,25 MHz	V_o	typ.	600	mV	←
Noise figure at optimum source impedance $-I_C$ = 50 mA; $-V_{CE}$ = 10 V; f = 800 MHz	F	typ.	4,3	dB	←
Maximum unilateral power gain $-I_C$ = 70 mA; $-V_{CE}$ = 10 V; f = 800 MHz	G_{UM}	typ.	10,0	dB	←

MECHANICAL DATA (see Fig. 1)

Dimensions in mm

MECHANICAL DATA

Dimensions in mm

Fig. 1 SOT-37

Connections

1. Base
2. Emitter
3. Collector

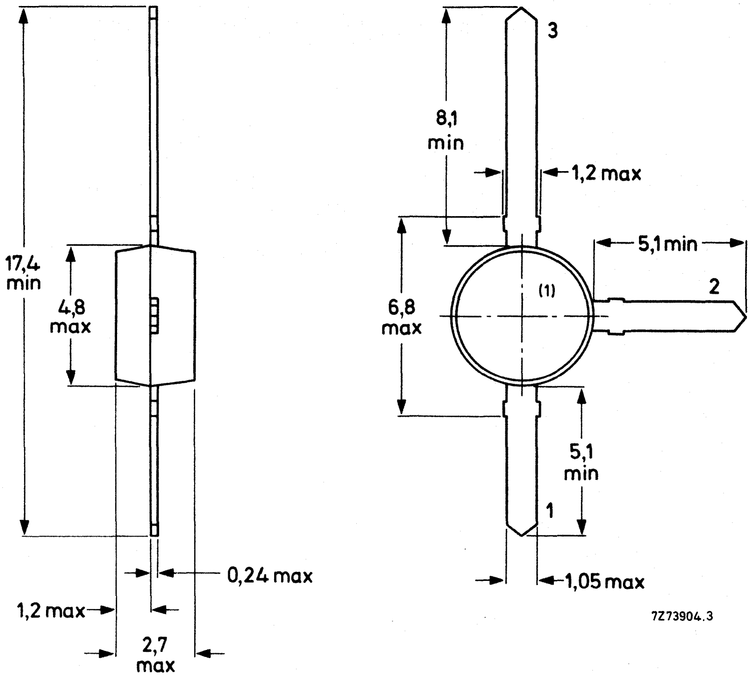

(1) = type number marking.

RATINGS

Limiting values in accordance with the Absolute Maximum System (IEC 134)

Collector-base voltage (open emitter)	$-V_{CBO}$	max.	20	V
Collector-emitter voltage (open base)	$-V_{CEO}$	max.	15	V
Emitter-base voltage (open collector)	$-V_{EBO}$	max.	3	V
Collector current (d.c.)	$-I_C$	max.	100	mA
Total power dissipation up to T_{amb} = 70 °C mounted on a fibre-glass print of 50 mm x 50 mm x 1,5 mm (see Fig. 3)	P_{tot}	max.	700	mW
Storage temperature	T_{stg}	−65 to + 175		°C
Junction temperature	T_j	max.	175	°C

THERMAL RESISTANCE

From junction to ambient in free air mounted on a fibre-glass print of 50 mm x 50 mm x 1,5 mm (see Fig. 3)	$R_{th\ j\text{-}a}$	=	150	K/W
From junction to case	$R_{th\ j\text{-}c}$	=	50	K/W

CHARACTERISTICS

T_j = 25 °C unless otherwise specified

Collector cut-off current $I_E = 0$; $-V_{CB} = 10$ V	$-I_{CBO}$	max.	100	nA	
D.C. current gain $-I_C = 70$ mA; $-V_{CE} = 10$ V	h_{FE}	min.	20		
Transition frequency at f = 500 MHz $-I_C = 70$ mA; $-V_{CE} = 10$ V	f_T	typ.	4,5	GHz	
Collector capacitance at f = 1 MHz $I_E = 0$; $-V_{CB} = 10$ V	C_c	typ.	1,8	pF	
Emitter capacitance at f = 1 MHz $I_C = 0$; $-V_{EB} = 0,5$ V	C_e	typ.	6,0	pF	
Feedback capacitance at f = 1 MHz $I_C = 0$; $-V_{CE} = 10$ V	C_{re}	typ.	1,3	pF	
Output voltage at $d_{im} = -60$ dB (see Fig. 2) $-I_C = 70$ mA; $-V_{CE} = 10$ V; $R_L = 75\ \Omega$; $T_{amb} = 25$ °C $V_p = V_o$ at $d_{im} = -60$ dB ; $f_p = 795,25$ MHz $V_q = V_o - 6$ dB; $f_q = 803,25$ MHz $V_r = V_o - 6$ dB; $f_r = 805,25$ MHz					←
measured at $f_{(p+q-r)} = 793,25$ MHz	V_o	typ.	600	mV	←
Noise figure at optimum source impedance $-I_C = 50$ mA; $-V_{CE} = 10$ V; f = 800 MHz; $T_{amb} = 25$ °C	F	typ.	4,3	dB	
Maximum unilateral power gain (s_{re} assumed to be zero)					←

$$G_{UM} = 10 \log \frac{|s_{fe}|}{[1-|s_{ie}|^2]\,[1-|s_{oe}|^2]}$$

$-I_C = 70$ mA; $-V_{CE} = 10$ V; f = 800 MHz; $T_{amb} = 25$ °C	G_{UM}	typ.	10,0	dB

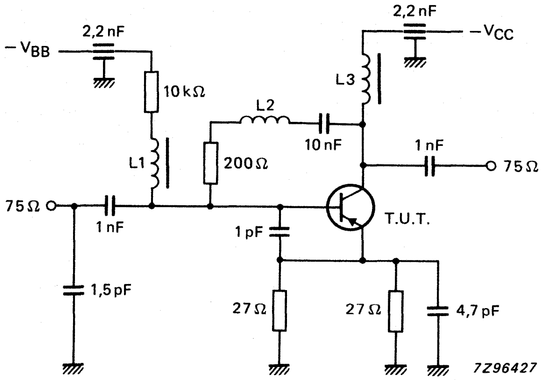

Fig. 2 Intermodulation distortion and second harmonic distortion test circuit.

L1 = L3 = 5 μH micro choke.
L2 = 1½ turns Cu wire (0,4 mm); internal diameter 3,0 mm; winding pitch 1 mm.

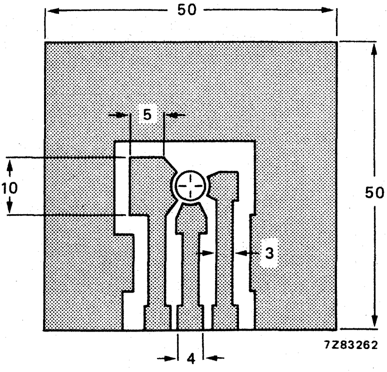

Fig. 3 Requirements for fibre-glass print (Dimensions in mm).
Single-sided 35 μm Cu-clad epoxy fibre-glass print, thickness 1,5 mm.
Tracks are fully tin-plated. Shaded area is Cu.

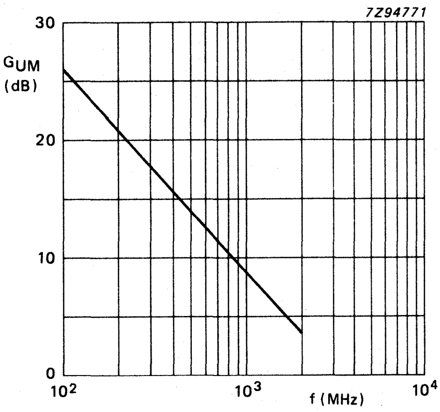

Fig. 4 $-V_{CE} = 10$ V; $-I_C = 70$ mA; $T_{amb} = 25$ °C; typical values.

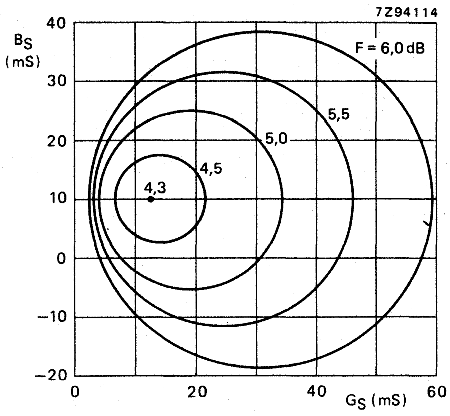

Fig. 5 Circles of constant noise figure; $-V_{CE} = 10$ V; $-I_C = 50$ mA; f = 800 MHz; $T_{amb} = 25$ °C; typical values.

s-parameters (common emitter) at $-V_{CE}$ = 10 V; T_{amb} = 25 °C; typical values.

I_C mA	f MHz	s_{ie}	s_{fe}	s_{re}	s_{oe}	G_{UM} dB
10	40	0,57/ −58,5°	21,9/149,1°	0,03/ 67,4°	0,83/ −31,3°	33,5
	100	0,54/−115,0°	14,0/119,9°	0,05/ 52,1°	0,55/ −59,6°	25,9
	200	0,51/−150,4°	8,0/101,3°	0,06/ 52,2°	0,32/ −76,0°	19,8
	500	0,54/+174,6°	3,4/ 76,8°	0,11/ 58,3°	0,21/−102,6°	12,3
	800	0,53/+156,0°	2,2/ 62,8°	0,16/ 60,2°	0,22/−111,4°	8,6
	1000	0,54/+144,8°	1,8/ 54,3°	0,19/ 59,1°	0,22/−117,8°	6,8
	1200	0,58/+133,4°	1,5/ 48,9°	0,22/ 59,3°	0,21/−127,1°	5,6
	1500	0,56/+124,8°	1,3/ 38,8°	0,28/ 56,2°	0,26/−136,9°	4,3
	2000	0,59/ +99,9°	1,0/ 28,0°	0,36/ 52,5°	0,30/−155,2°	2,6
20	40	0,41/ −87,0°	29,7/140,9°	0,02/ 64,6°	0,72/ −44,1°	33,5
	100	0,47/−140,2°	16,8/113,0°	0,04/ 58,2°	0,42/ −78,8°	26,5
	200	0,48/−168,6°	9,1/ 97,5°	0,06/ 62,9°	0,25/−101,7°	20,6
	500	0,52/+168,4°	3,8/ 76,7°	0,11/ 66,3°	0,20/−135,8°	13,1
	800	0,51/+151,9°	2,5/ 63,8°	0,18/ 64,6°	0,21/−139,1°	9,4
	1000	0,53/+141,5°	2,0/ 56,0°	0,21/ 61,8°	0,21/−148,3°	7,6
	1200	0,57/+130,1°	1,7/ 51,3°	0,24/ 61,0°	0,20/−159,0°	6,4
	1500	0,54/+123,0°	1,5/ 41,2°	0,30/ 55,8°	0,24/−160,3°	5,0
	2000	0,56/ +98,4°	1,2/ 30,4°	0,38/ 50,3°	0,27/−174,2°	3,4
30	40	0,37/−105,8°	33,1/136,9°	0,02/ 66,1°	0,66/ −50,9°	33,5
	100	0,46/−151,1°	17,6/110,5°	0,03/ 62,8°	0,38/ −88,7°	26,6
	200	0,47/−170,5°	9,5/ 96,1°	0,05/ 68,0°	0,24/−114,6°	20,9
	500	0,52/+166,1°	3,9/ 76,5°	0,11/ 69,2°	0,22/−146,2°	13,4
	800	0,51/+150,5°	2,6/ 64,1°	0,18/ 66,0°	0,22/−149,9°	9,7
	1000	0,52/+140,3°	2,1/ 56,7°	0,21/ 62,8°	0,22/−159,1°	7,9
	1200	0,57/+129,1°	1,7/ 52,3°	0,25/ 61,5°	0,22/−169,9°	6,7
	1500	0,53/+122,2°	1,5/ 42,0°	0,31/ 55,7°	0,25/−169,0°	5,3
	2000	0,56/ +97,6°	1,2/ 31,5°	0,39/ 49,6°	0,28/+178,0°	3,6
50	40	0,35/−127,2°	35,9/133,0°	0,02/ 67,2°	0,59/ −58,3°	33,5
	100	0,46/−160,9°	16,2/108,0°	0,03/ 67,6°	0,34/ −99,7°	26,8
	200	0,47/−175,8°	9,7/ 94,8°	0,05/ 72,6°	0,23/−127,1°	21,1
	500	0,52/+164,3°	4,0/ 76,3°	0,12/ 71,5°	0,23/−155,0°	13,6
	800	0,51/+149,3°	2,6/ 64,2°	0,18/ 67,0°	0,23/−158,1°	9,8
	1000	0,52/+139,4°	2,1/ 57,0°	0,22/ 63,4°	0,24/−166,9°	8,0
	1200	0,57/+128,3°	1,8/ 52,8°	0,25/ 62,0°	0,24/−177,8°	6,9
	1500	0,53/+121,5°	1,5/ 42,8°	0,31/ 55,8°	0,27/−175,6°	5,4
	2000	0,56/ +96,8°	1,2/ 32,3°	0,40/ 49,3°	0,29/+171,5°	3,8
70	40	0,35/−137,4°	36,1/131,1°	0,02/ 67,0°	0,54/ −62,3°	33,4
	100	0,46/−165,0°	18,2/107,0°	0,03/ 70,5°	0,32/−105,3°	26,7
	200	0,48/−177,8°	9,7/ 94,3°	0,05/ 74,3°	0,23/−133,1°	21,1
	500	0,52/+163,7°	3,9/ 76,0°	0,12/ 72,2°	0,24/−158,5°	13,6
	800	0,51/+149,0°	2,6/ 63,9°	0,19/ 67,4°	0,24/−161,1°	10,0
	1000	0,53/+139,1°	2,1/ 56,8°	0,22/ 63,7°	0,25/−169,7°	8,0
	1200	0,58/+128,1°	1,8/ 52,7°	0,26/ 62,2°	0,24/−179,7°	6,9
	1500	0,54/+121,2°	1,5/ 42,6°	0,32/ 55,7°	0,27/−178,0°	5,4
	2000	0,56/ +96,5°	1,2/ 32,3°	0,40/ 49,1°	0,29/+169,2°	3,9

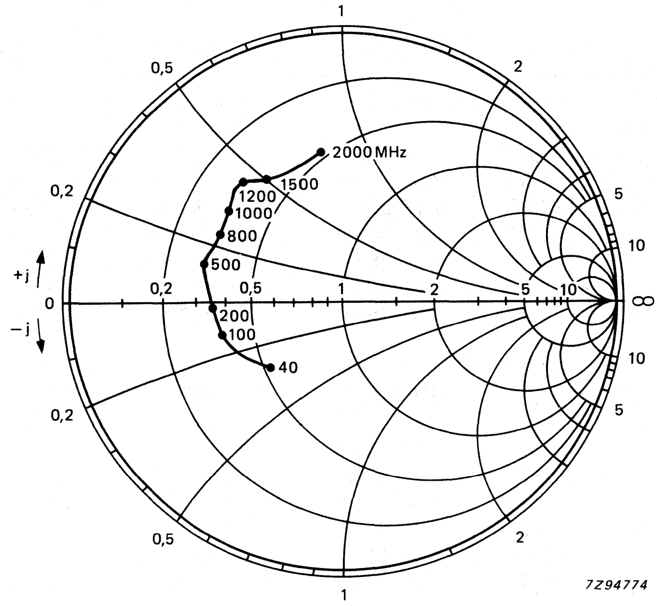

Fig. 6 Input impedance, derived from input reflection coefficient s_{ie} coordinates, in ohm x 50.

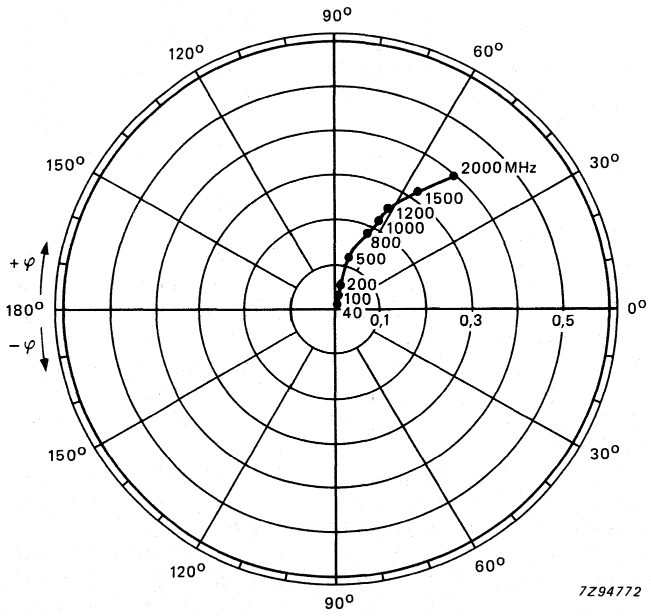

Fig. 7 Reverse transmission coefficient s_{re}.

Conditions for Figs 6 to 9: $-V_{CE}$ = 10 V; $-I_C$ = 70 mA; T_{amb} = 25 °C; typical values.

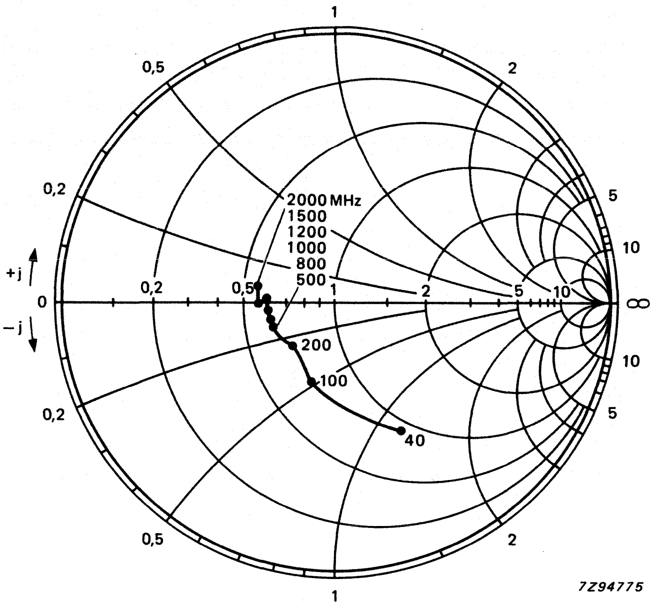

Fig. 8 Output impedance, derived from output reflection coefficient s_{oe} coordinates, in ohm x 50.

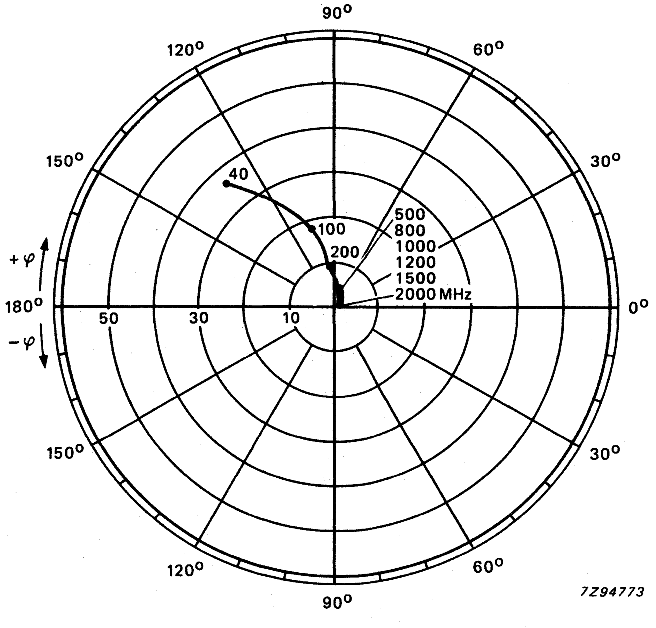

Fig. 9 Forward transmission coefficient s_{fe}.

N-P-N MICROWAVE TRANSISTOR

The BFQ is an N-P-N transistor in a miniature hermetically sealed microstripline encapsulation, featuring an extremely high transition frequency of 12 GHz and very low noise.

It is primarily intended for use in microwave amplifier applications.

QUICK REFERENCE DATA

Collector-base voltage (open emitter)	V_{CBO}	max.	9	V
Collector-emitter voltage (open base)	V_{CEO}	max.	7	V
Collector current (d.c.)	I_C	max.	20	mA
Total power dissipation up to T_{amb} = 80 °C	P_{tot}	max.	140	mW
Transition frequency at f = 1,5 GHz I_C = 14 mA; V_{CE} = 5 V	f_T	typ.	12	GHz
Noise figure at optimum source impedance I_C = 5 mA; V_{CE} = 5 V; f = 2 GHz	F	typ.	2,5	dB
Maximum unilateral power gain I_C = 14 mA; V_{CE} = 5 V; f = 2 GHz; T_{amb} = 25 °C	G_{UM}	typ.	13,7	dB

MECHANICAL DATA

Dimensions in mm

Fig. 1 SOT-100.

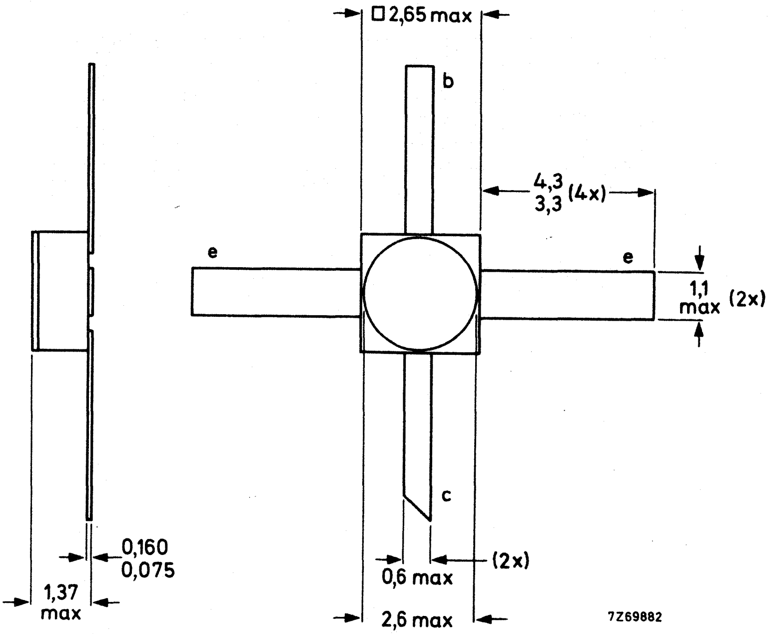

RATINGS

Limiting values in accordance with the Absolute Maximum System (IEC 134)

Collector-base voltage (open emitter)	V_{CBO}	max.	9	V
Collector-emitter voltage (open base)	V_{CEO}	max.	7	V
Emitter-base voltage (open collector)	V_{EBO}	max.	2	V
Collector current (d.c.)	I_C	max.	20	mA
Total power dissipation up to T_{amb} = 80 °C	P_{tot}	max.	140	mW
Storage temperature	T_{stg}	−65 to + 150		°C
Junction temperature	T_j	max.	150	°C

THERMAL RESISTANCE

From junction to ambient in free air mounted on a fibre-glass print of 40 mm x 25 mm x 1 mm	$R_{th\ j\text{-}a}$	=	500	K/W

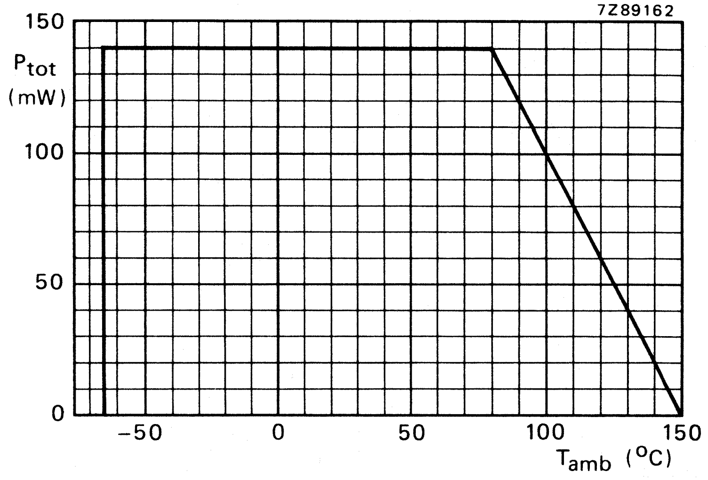

Fig. 2 Power derating curve versus ambient temperature.

CHARACTERISTICS

T_{amb} = 25 °C unless otherwise specified

Collector cut-off current			
$I_E = 0$; $V_{CB} = 5$ V	I_{CBO}	$<$	50 nA
D.C. current gain*			
$I_C = 14$ mA; $V_{CE} = 5$ V	h_{FE}	$>$	25
Collector capacitance at f = 1 MHz			
$I_E = I_e = 0$; $V_{CB} = 5$ V	C_c	typ.	0,45 pF
Feedback capacitance at f = 1 MHz			
$I_C = 0$; $V_{CE} = 5$ V	C_{re}	typ.	0,2 pF
Transition frequency at f = 1,5 GHz*			
$I_C = 14$ mA; $V_{CE} = 5$ V	f_T	typ.	12 GHz
Noise figure at optimum source impedance			
$I_C = 5$ mA; $V_{CE} = 5$ V; f = 2 GHz	F	typ.	2,5 dB
$I_C = 5$ mA; $V_{CE} = 5$ V; f = 4 GHz	F	typ.	3,8 dB

Maximum unilateral power gain (s_{re} assumed to be zero)

$$G_{UM} = 10 \log \frac{|s_{fe}|^2}{(1 - |s_{ie}|^2)\,(1 - |s_{oe}|^2)}$$

$I_C = 14$ mA; $V_{CE} = 5$ V; f = 2 GHz	G_{UM}	typ.	13,7 dB
$I_C = 14$ mA; $V_{CE} = 5$ V; f = 4 GHz	G_{UM}	typ.	7,4 dB
s-parameters (common emitter)			
$I_C = 14$ mA; $V_{CE} = 5$ V; $R_S = R_L = 50\ \Omega$; f = 2 GHz			
Input reflection coefficient	s_{ie}	typ.	0,18/−155°
Reverse transmission coefficient	s_{re}	typ.	0,10/ +49°
Forward transmission coefficient	s_{fe}	typ.	4,3 / +75°
Output reflection coefficient	s_{oe}	typ.	0,43/ −56°
$I_C = 14$ mA; $V_{CE} = 5$ V; $R_S = R_L = 50\ \Omega$; f = 4 GHz			
Input reflection coefficient	s_{ie}	typ.	0,19/+171°
Reverse transmission coefficient	s_{re}	typ.	0,14/ +34°
Forward transmission coefficient	s_{fe}	typ.	2,0 / +48°
Output reflection coefficient	s_{oe}	typ.	0,50/ −89°

---

* Measured under pulse conditions.

Conditions for Figs 3 and 4:
V_{CE} = 5 V; I_C = 14 mA;
T_{amb} = 25 °C; typical values.

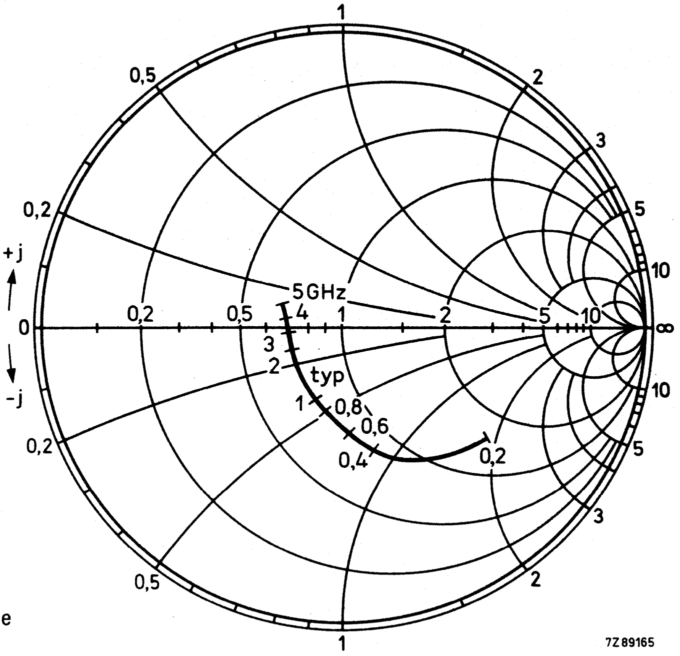

Fig. 3 Input impedance derived from input reflection coefficient s_{ie} co-ordinates in ohm x 50.

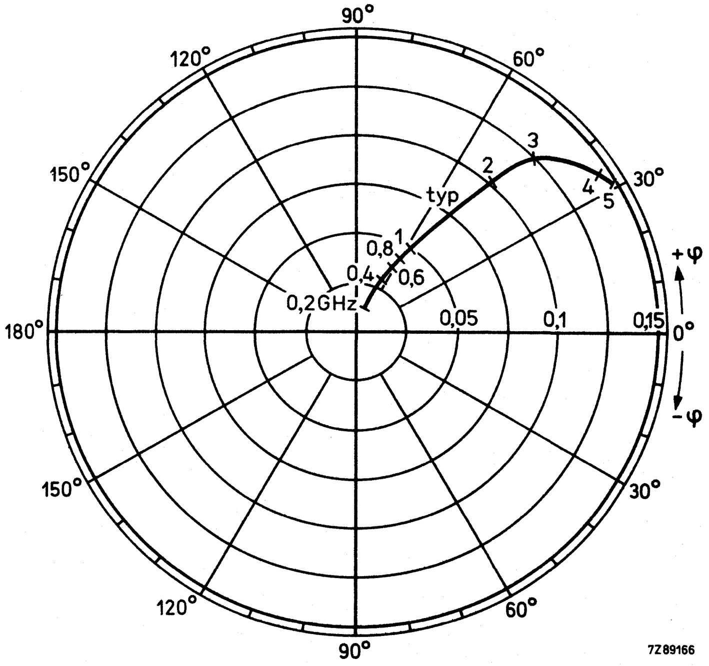

Fig. 4 Reverse transmission coefficient s_{re}.

Conditions for Figs 5 and 6:
V_{CE} = 5 V; I_C = 14 mA;
T_{amb} = 25 °C; typical values.

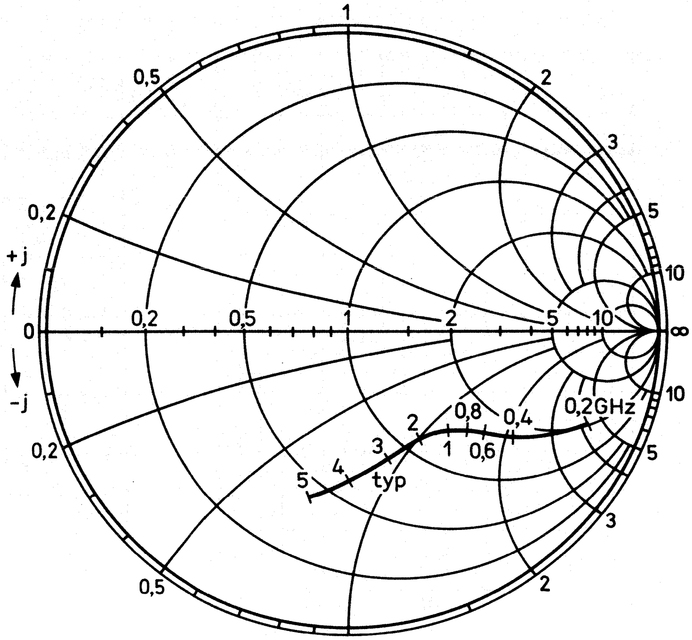

Fig. 5 Output impedance derived from output reflection coefficient s_{oe} co-ordinates in ohm x 50.

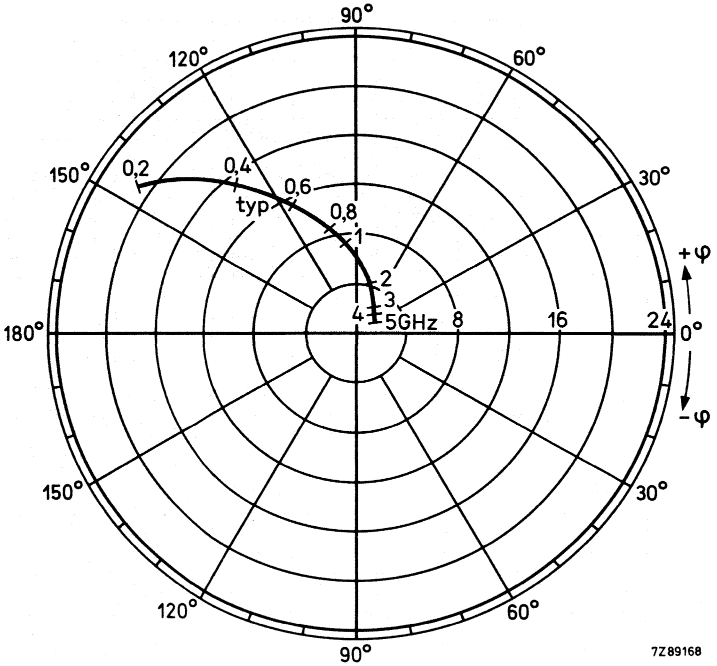

Fig. 6 Forward transmission coefficient s_{fe}.

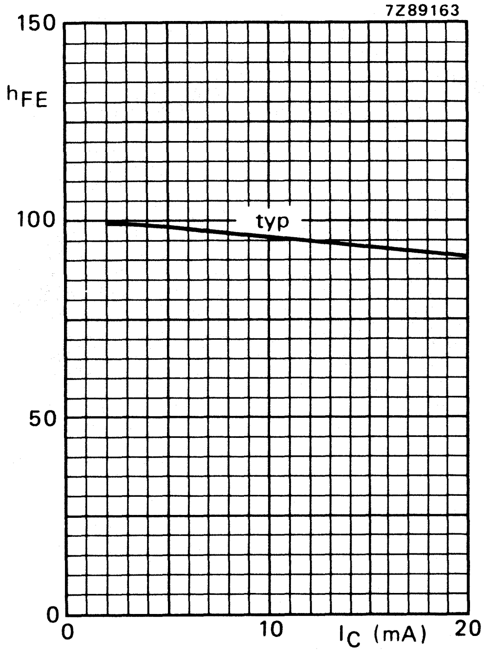

Fig. 7 V_{CE} = 5 V; T_j = 25 °C.

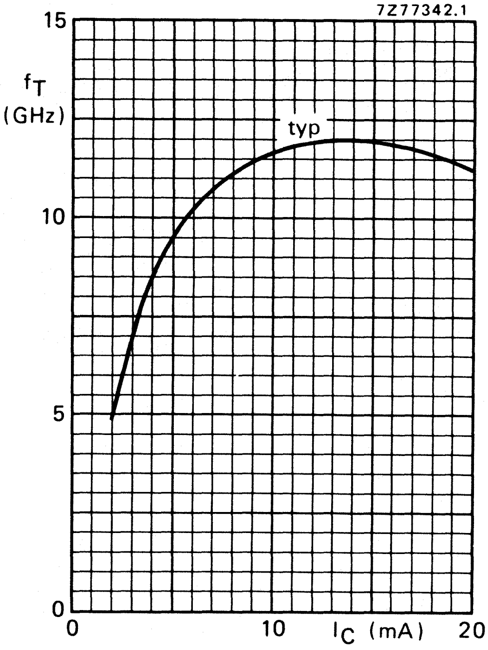

Fig. 8 V_{CE} = 5 V; f = 1,5 GHz; T_j = 25 °C.

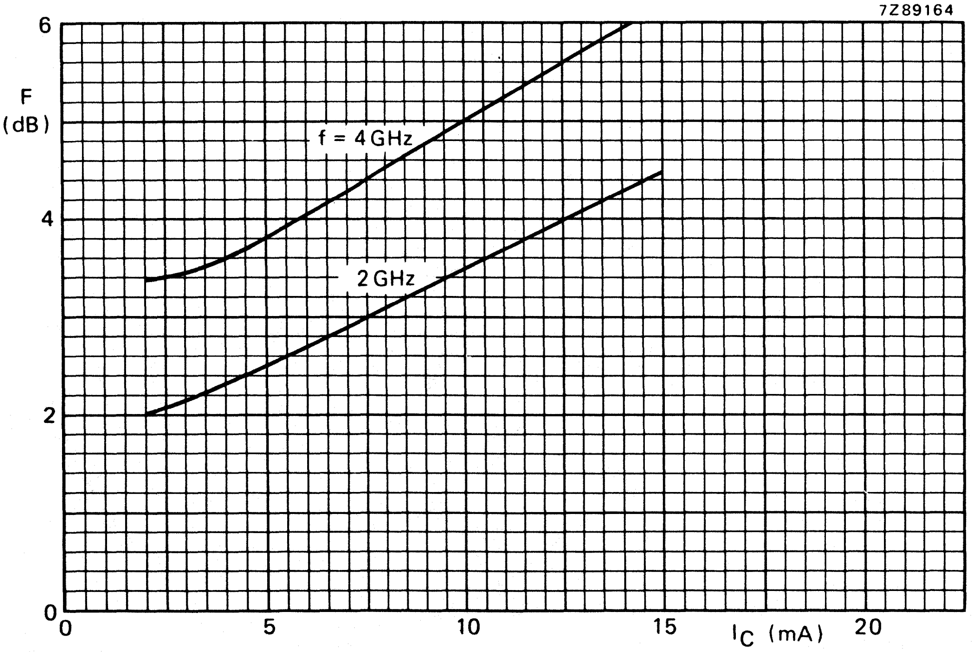

Fig. 9 V_{CE} = 5 V; Z_S = optimum; T_{amb} = 25 °C; typical values.

N-P-N MICROWAVE TRANSISTOR

N-P-N transistor in a sub-miniature HERMETICALLY sealed microstripline encapsulation. This device features extremely high transition frequency of 12 GHz and very low noise. The BFQ33C is primarily intended for microwave amplifier applications.

QUICK REFERENCE DATA

Collector-base voltage (open emitter)	V_{CBO}	max.	9	V
Collector-emitter voltage (open base)	V_{CEO}	max.	7	V
Collector current (d.c.)	I_C	max.	20	mA
Total power dissipation up to T_{amb} = 120 °C	P_{tot}	max.	140	mW
Transition frequency at f = 1,5 GHz I_C = 14 mA; V_{CE} = 5 V	f_T	typ.	12	GHz
Noise figure at optimum source impedance I_C = 5 mA; V_{CE} = 5 V; f = 2 GHz	F	typ.	3,0	dB
Maximum unilateral power gain at f = 2 GHz; I_C = 14 mA; V_{CE} = 5 V	G_{UM}	typ.	12,5	dB

MECHANICAL DATA

Dimensions in mm

Fig. 1 SOT-173.

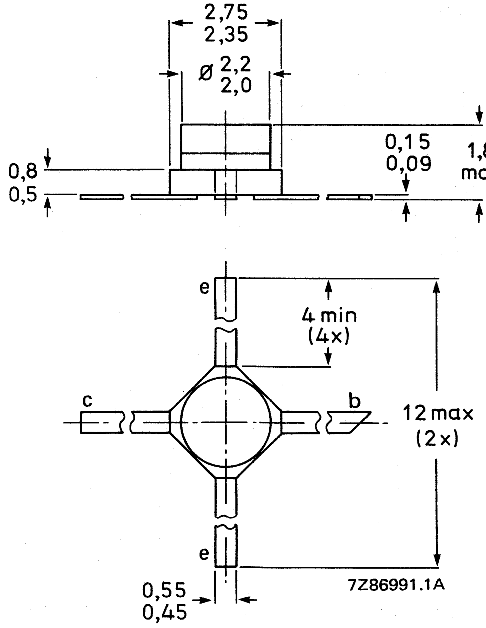

Marking code: Q3

RATINGS

Limiting values in accordance with the Absolute Maximum System (IEC 134)

Collector-base voltage (open emitter)	V_{CBO}	max.	9	V
Collector-emitter voltage (open base)	V_{CEO}	max.	7	V
Emitter-base voltage (open collector)	V_{EBO}	max.	2	V
Collector current (d.c.)	I_C	max.	20	mA
Total power dissipation up to T_{amb} = 120 °C	P_{tot}	max.	140	mW
Storage temperature	T_{stg}		−65 to +150	°C
Junction temperature	T_j	max.	150	°C

THERMAL RESISTANCE

From junction to ambient in free air mounted on a ceramic substrate of 0,7 mm x 10 cm^2	$R_{th\ j\text{-}a}$		200	K/W

CHARACTERISTICS

→ T_j = 25 °C unless otherwise specified

Collector cut-off current $I_E = 0$; V_{CB} = 5 V	I_{CBO}	max.	50	nA
→ D.C. current gain I_C = 14 mA; V_{CE} = 5 V	h_{FE}	min.	50	
Transition frequency at f = 1,5 GHz I_C = 14 mA; V_{CE} = 5 V; T_{amb} = 25 °C	f_T	typ.	12	GHz
Collector capacitance at f = 1 MHz $I_E = I_e = 0$; V_{CB} = 5 V	C_c	typ.	0,35	pF
Feedback capacitance at f = 1 MHz $I_C = 0$; V_{CE} = 5 V	C_{re}	typ.	0,2	pF
Noise figure at optimum source impedance → I_C = 5 mA; V_{CE} = 5 V; f = 2 GHz; T_{amb} = 25 °C	F	typ.	3,0	dB

→ Maximum unilateral power gain (s_{re} assumed to be zero)

$$G_{UM} = 10 \log \frac{|s_{fe}|^2}{[1-|s_{ie}|^2]\,[1-|s_{oe}|^2]}$$

at I_C = 14 mA; V_{CE} = 5 V; T_{amb} = 25 °C				
f = 2 GHz	G_{UM}	typ.	12,5	dB
f = 4 GHz	G_{UM}	typ.	7,5	dB

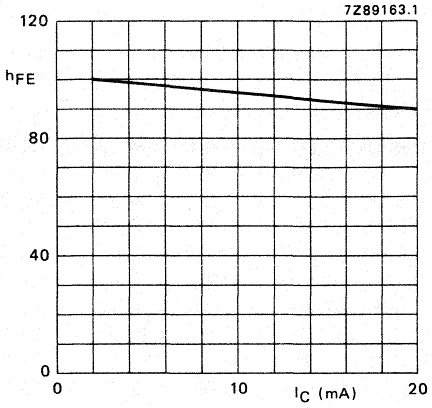

Fig. 2 $V_{CE} = 5$ V; $T_j = 25$ °C; typical values.

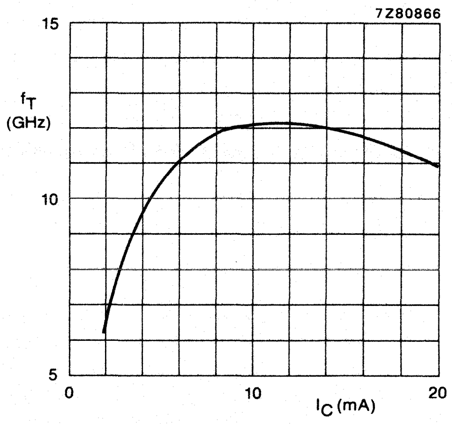

Fig. 3 $V_{CE} = 5$ V; f = 1,5 GHz; $T_{amb} = 25$ °C; typical values.

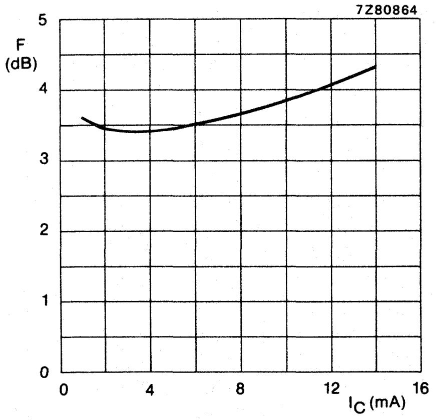

Fig. 4 $V_{CE} = 5$ V; $Z_S = 60\ \Omega$; $T_{amb} = 25$ °C; f = 2 GHz; typical values.

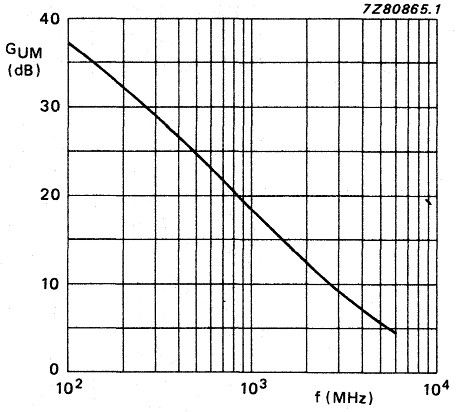

Fig. 5 $V_{CE} = 5$ V; $I_C = 14$ mA; $T_{amb} = 25$ °C; $Z_S = 60\ \Omega$; typical values.

s-parameters (common-emitter) at V_{CE} = 5 V; T_{amb} = 25 °C; typical values.

I_C mA	f MHz	s_{ie}	s_{fe}	s_{re}	s_{oe}	G_{UM} dB
5	100	0,82/ −12,3°	12,6/168,1°	0,013/ 82,1°	0,97/ −7,6°	39,1
	200	0,78/ −24,2°	12,0/156,1°	0,024/ 77,0°	0,93/ −14,6°	34,5
	300	0,72/ −33,9°	11,0/146,1°	0,034/ 72,3°	0,89/ −20,3°	30,8
	400	0,67/ −42,9°	10,1/138,3°	0,043/ 69,4°	0,85/ −25,3°	28,1
	500	0,62/ −50,0°	9,2/131,3°	0,050/ 67,4°	0,81/ −28,6°	25,9
	600	0,57/ −56,3°	8,3/124,8°	0,056/ 65,6°	0,77/ −31,4°	24,0
	700	0,53/ −61,5°	7,6/119,8°	0,062/ 64,4°	0,74/ −33,8°	22,5
	800	0,49/ −66,6°	6,9/115,2°	0,068/ 63,7°	0,71/ −35,7°	21,0
	900	0,45/ −67,3°	6,3/111,4°	0,073/ 63,6°	0,69/ −36,1°	19,8
	1000	0,41/ −71,8°	5,8/107,4°	0,078/ 62,6°	0,66/ −37,4°	18,6
	1200	0,35/ −78,7°	5,1/100,5°	0,088/ 61,8°	0,63/ −39,7°	16,8
	1500	0,29/ −80,0°	3,9/ 89,6°	0,098/ 57,6°	0,63/ −40,0°	14,4
	2000	0,23/ −88,5°	3,2/ 79,8°	0,125/ 56,7°	0,59/ −44,2°	12,3
	2500	0,19/−100,7°	2,7/ 70,8°	0,147/ 55,1°	0,56/ −49,5°	10,3
	3000	0,16/−101,6°	2,3/ 64,1°	0,169/ 53,0°	0,57/ −53,7°	9,1
	3500	0,15/−112,5°	2,1/ 60,4°	0,211/ 53,4°	0,55/ −58,2°	8,3
	4000	0,10/−124,8°	1,9/ 52,7°	0,219/ 49,5°	0,52/ −68,6°	7,1
	5000	0,02/+127,0°	1,6/ 38,9°	0,267/ 43,5°	0,45/ −92,3°	5,3
	6000	0,14/ +56,1°	1,4/ 24,3°	0,298/ 32,4°	0,44/−122,2°	4,1
14	100	0,61/ −20,1°	21,2/161,3°	0,011/ 78,8°	0,93/ −11,4°	37,3
	200	0,55/ −37,8°	18,7/144,7°	0,020/ 73,3°	0,85/ −20,6°	32,5
	300	0,47/ −50,7°	15,9/132,7°	0,027/ 69,6°	0,77/ −26,2°	29,0
	400	0,42/ −61,6°	13,8/124,5°	0,034/ 68,2°	0,71/ −30,3°	26,6
	500	0,37/ −68,8°	11,9/118,0°	0,040/ 68,0°	0,66/ −32,5°	24,7
	600	0,34/ −75,4°	10,3/112,2°	0,045/ 67,7°	0,63/ −33,9°	23,0
	700	0,29/ −81,0°	9,2/108,0°	0,050/ 67,6°	0,60/ −35,4°	21,6
	800	0,29/ −86,0°	8,2/104,4°	0,055/ 67,9°	0,58/ −36,4°	20,5
	900	0,26/ −85,1°	7,4/101,4°	0,060/ 68,2°	0,57/ −36,0°	19,4
	1000	0,23/ −91,1°	6,7/ 78,3°	0,065/ 68,0°	0,55/ −36,6°	18,4
	1200	0,20/ −99,8°	5,7/ 92,9°	0,076/ 67,7°	0,53/ −38,4°	16,8
	1500	0,15/−101,4°	4,4/ 83,0°	0,088/ 63,9°	0,55/ −37,7°	14,6
	2000	0,12/−110,6°	3,6/ 75,4°	0,114/ 63,2°	0,53/ −41,8°	12,5
	2500	0,10/−132,5°	2,9/ 67,8°	0,137/ 61,3°	0,51/ −46,9°	10,7
	3000	0,07/−137,0°	2,6/ 61,8°	0,160/ 59,1°	0,52/ −51,3°	9,6
	3500	0,07/−163,9°	2,3/ 60,0°	0,191/ 61,8°	0,55/ −54,0°	8,4
	4000	0,05/+163,7°	2,1/ 52,0°	0,208/ 56,2°	0,47/ −65,6°	7,5
	5000	0,11/ +81,7°	1,8/ 37,9°	0,261/ 49,2°	0,41/ −91,1°	5,8
	6000	0,23/ +56,0°	1,5/ 24,0°	0,291/ 38,3°	0,41/−122,9°	4,6

Conditions for Figs 6 and 7 :
V_{CE} = 5 V; I_C = 14 mA;
T_{amb} = 25 °C; typical values.

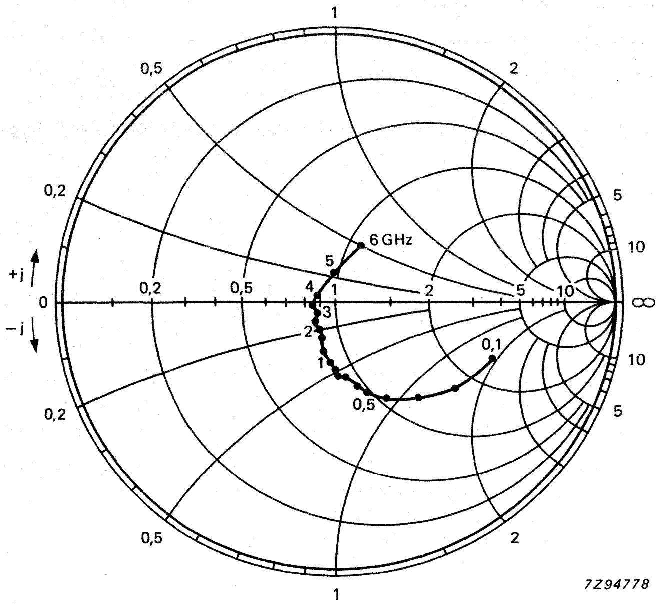

Fig. 6 Input impedance derived from input reflection coefficient s_{ie} co-ordinates in ohms x 50.

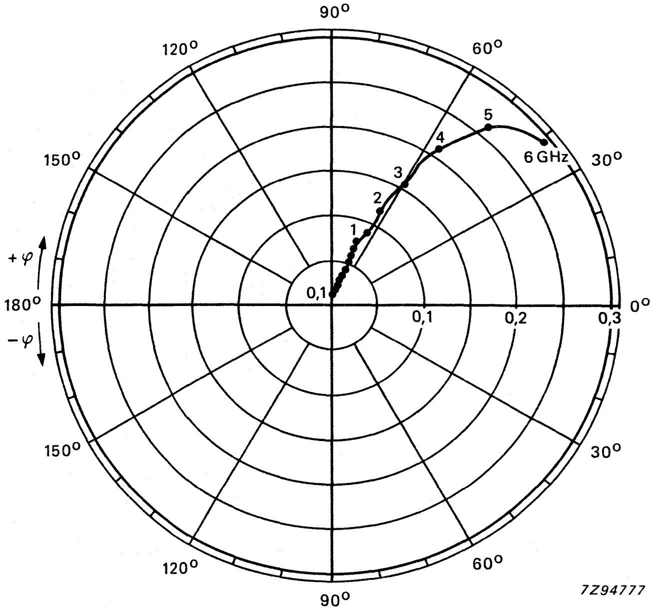

Fig. 7 Reverse transmission coefficient s_{re}.

Conditions for Figs 8 and 9:
V_{CE} = 5 V; I_C = 14 mA;
T_{amb} = 25 °C; typical values.

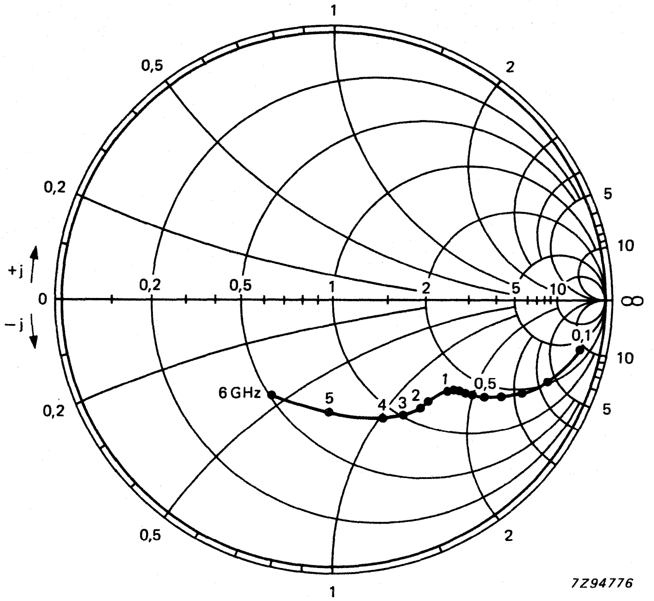

Fig. 8 Output impedance derived from output reflection coefficient s_{oe} co-ordinates in ohms x 50.

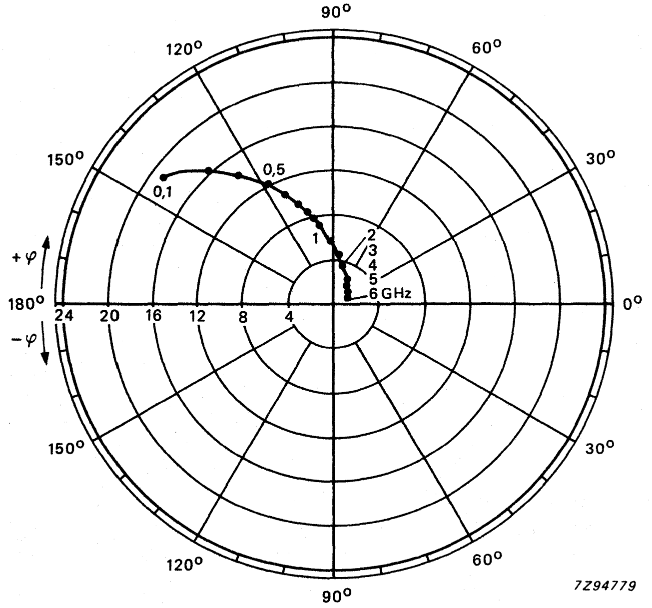

Fig. 9 Forward transmission coefficient s_{fe}.

N-P-N 1 GHz WIDEBAND TRANSISTOR

N-P-N transistor primarily intended for driver and final stages in MATV system amplifiers. This device is also suitable for use in low power band IV and V equipment. Diffused emitter ballasting resistors and the application of gold sandwich metallization ensure an optimum temperature profile and excellent reliability properties. This device features high output voltage capabilities.

The transistor has a ¼″ capstan envelope with ceramic cap. All leads are isolated from the stud.

QUICK REFERENCE DATA

Collector-base voltage (open emitter)	V_{CBO}	max.	25	V
Collector-emitter voltage (open base)	V_{CEO}	max.	18	V
Collector current (d.c.)	I_C	max.	150	mA
Total power dissipation (d.c.) up to T_{mb} = 125 °C	P_{tot}	max.	2,25	W
Operating junction temperature	T_j	max.	200	°C
Transition frequency at f = 500 MHz I_C = 150 mA; V_{CE} = 15 V	f_T	min.	3,5	GHz
Output voltage at d_{im} = −60 dB I_C = 120 mA; V_{CE} = 15 V; R_L = 75 Ω $f_{(p+q-r)}$ = 793,25 MHz	V_o	typ.	1,2	V
Output power at 1 dB gain compression	P_{L1}	typ.	+26	dBm
Third order intercept point	ITO	typ.	+45	dBm

MECHANICAL DATA

SOT-122 (see Fig. 1).

PRODUCT SAFETY

This device incorporates beryllium oxide, the dust of which is toxic. The device is entirely safe provided that the BeO disc is not damaged.

MECHANICAL DATA

Dimensions in mm

Fig. 1 SOT-122.

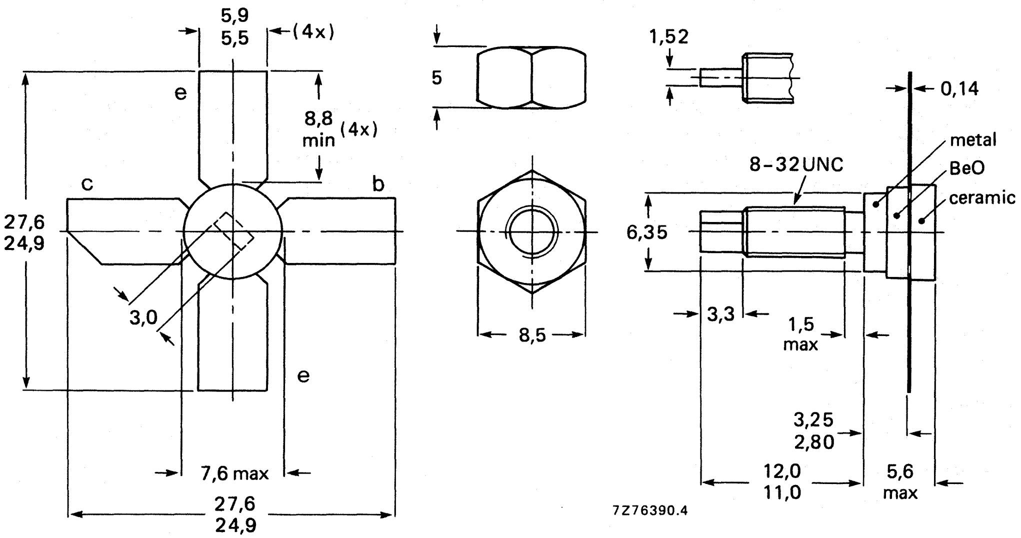

Torque on nut:	min.	0,75 Nm (7,5 kg cm)	
	max.	0,85 Nm (8,5 kg cm)	

Diameter of clearance hole in heatsink: max. 4,2 mm.
Mounting hole to have no burrs at either end.
De-burring must leave surface flat; do not chamfer or countersink either end of hole.

When locking is required an adhesive is preferred instead of a lock washer.

RATINGS

Limiting values in accordance with the Absolute Maximum System (IEC 134)

Collector-base voltage (open emitter)	V_{CBO}	max.	25	V
Collector-emitter voltage (open base) (see Fig. 3)	V_{CEO}	max.	18	V
Emitter-base voltage (open collector)	V_{EBO}	max.	2	V
Collector current (d.c.)	I_C	max.	150	mA
Total power dissipation (d.c.) up to T_{mb} = 125 °C (see Fig. 3)	P_{tot}	max.	2,25	W
Storage temperature	T_{stg}		−65 to +150	°C
Operating junction temperature	T_j	max.	200	°C

THERMAL RESISTANCE

From junction to mounting base	$R_{th\ j\text{-}mb}$ =	15,0	K/W
From mounting base to heatsink	$R_{th\ mb\text{-}h}$ =	0,6	K/W

CHARACTERISTICS

$T_j = 25$ °C unless otherwise specified

Collector cut-off current			
$I_E = 0$; $V_{CB} = 15$ V	I_{CBO}	max.	100 μA
D.C. current gain			
$I_C = 75$ mA; $V_{CE} = 15$ V	h_{FE}	min.	25
$I_C = 150$ mA; $V_{CE} = 15$ V	h_{FE}	min.	25
Transition frequency at f = 500 MHz			
$I_C = 75$ mA; $V_{CE} = 15$ V	f_T	min. typ.	3,0 GHz 3,5 GHz
$I_C = 150$ mA; $V_{CE} = 15$ V	f_T	min. typ.	3,5 GHz 4,0 GHz
Collector capacitance at f = 1 MHz			
$I_E = I_e = 0$; $V_{CB} = 15$ V	C_c	typ. max.	2,0 pF 2,75 pF
Emitter capacitance at f = 1 MHz			
$I_C = I_c = 0$; $V_{EB} = 0{,}5$ V	C_e	typ.	11 pF
Feedback capacitance at f = 1 MHz			
$I_C = 10$ mA; $V_{CE} = 15$ V; $T_{amb} = 25$ °C	C_{re}	typ. max.	1,0 pF 1,35 pF
Collector-stud capacitance*	C_{cs}	typ.	0,8 pF
Noise figure measured in MATV test circuit (see Fig. 2)			
$I_C = 120$ mA; $V_{CE} = 15$ V; f = 500 MHz; $T_{amb} = 25$ °C	F	typ.	8 dB
Maximum unilateral power gain (s_{re} assumed to be zero)			
$G_{UM} = 10 \log \dfrac{\lvert s_{fe}\rvert^2}{(1 - \lvert s_{ie}\rvert^2)\,(1 - \lvert s_{oe}\rvert^2)}$			
$I_C = 120$ mA; $V_{CE} = 15$ V; f = 500 MHz; $T_{amb} = 25$ °C	G_{UM}	typ.	16,3 dB
Output voltage at $d_{im} = -60$ dB (see Figs 2 and 4)			
(DIN 45004B, par. 6.3.: 3-tone)			
$I_C = 120$ mA; $V_{CE} = 15$ V; $R_L = 75\ \Omega$; $T_{amb} = 25$ °C			
$V_p = V_o$ at $d_{im} = -60$ dB; $f_p = 795{,}25$ MHz			
$V_q = V_o - 6$ dB ; $f_q = 803{,}25$ MHz			
$R_r = V_o - 6$ dB ; $f_r = 805{,}25$ MHz			
measured at $f_{(p+q-r)} = 793{,}25$ MHz	V_o	typ.	1,2 V

---

* Measured with grounded emitter and base.

Output power at 1 dB gain compression (see Fig. 2)
I_C = 120 mA; V_{CE} = 15 V
→ R_L = 75 Ω; T_{amb} = 25 °C
measured at f = 800 MHz — P_{L1} typ. +26 dBm

Third order intercept point (see Fig. 2)
I_C = 120 mA; V_{CE} = 15 V
→ R_L = 75 Ω; T_{amb} = 25 °C
P_p = ITO − 6 dB; f_p = 800 MHz
P_q = ITO − 6 dB; f_q = 801 MHz
measured at $f_{(2q-p)}$ = 802 MHz and
at $f_{(2p-q)}$ = 799 MHz — ITO typ. +45 dBm

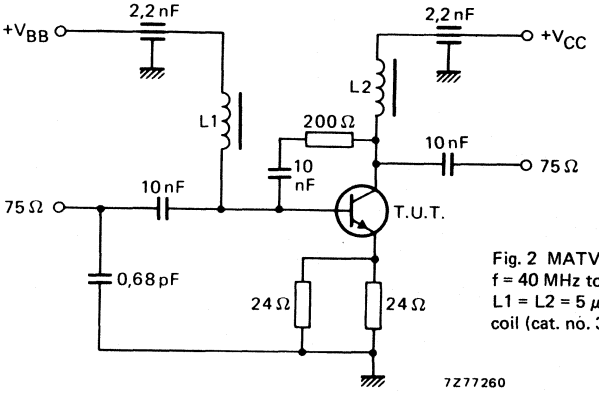

Fig. 2 MATV test circuit
f = 40 MHz to 860 MHz.
L1 = L2 = 5 μH Ferroxcube
coil (cat. no. 3122 108 20153).

→

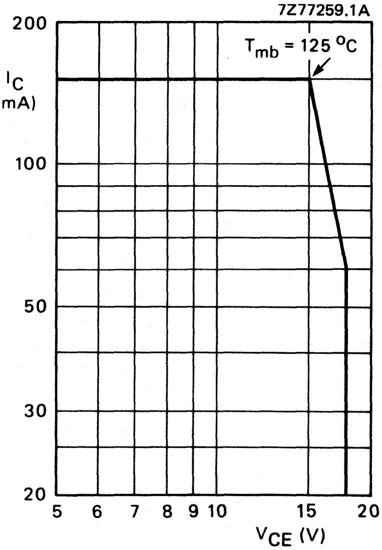

Fig. 3 D.C. SOAR.

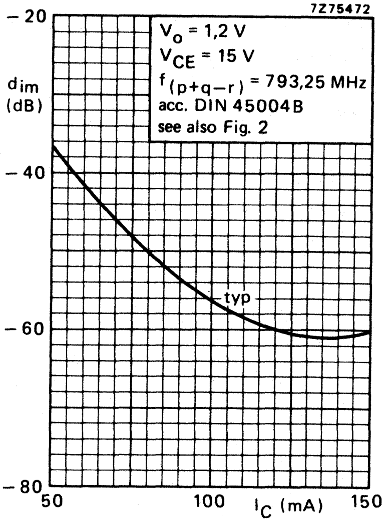

Fig. 4.

s-parameters (common emitter) at V_{CE} = 7,5 V; T_{amb} = 25 °C; typical values.

I_C mA	f MHz	s_{ie}	s_{re}	s_{fe}	s_{oe}	G_{UM} dB
50	40	0,47/ −72°	0,02/64°	30,5/147°	0,85/ −34°	36,3
	200	0,55/−154°	0,06/52°	11,3/101°	0,36/ −84°	23,2
	500	0,54/+177°	0,08/58°	4,9/ 78°	0,25/−104°	15,6
	800	0,52/+160°	0,12/58°	3,2/ 63°	0,25/−113°	11,8
	1000	0,50/+150°	0,15/57°	2,6/ 54°	0,26/−118°	9,9
	1200	0,48/+142°	0,18/54°	2,2/ 46°	0,28/−122°	8,3
75	40	0,45/ −76°	0,02/64°	32,1/144°	0,83/ −36°	36,2
	200	0,54/−156°	0,05/53°	11,6/100°	0,35/ −90°	23,4
	500	0,54/+176°	0,08/59°	5,0/ 78°	0,24/−112°	15,7
	800	0,51/+160°	0,13/59°	3,3/ 63°	0,24/−121°	11,9
	1000	0,49/+150°	0,16/57°	2,7/ 55°	0,24/−124°	10,1
	1200	0,46/+142°	0,18/54°	2,3/ 47°	0,26/−128°	8,6
100	40	0,44/ −79°	0,02/63°	33,0/145°	0,82/ −37°	36,2
	200	0,54/−157°	0,06/54°	11,8/100°	0,35/ −93°	23,5
	500	0,53/+175°	0,09/60°	5,1/ 78°	0,23/−117°	15,8
	800	0,51/+159°	0,13/59°	3,3/ 64°	0,23/−126°	11,9
	1000	0,49/+150°	0,16/57°	2,7/ 55°	0,24/−129°	10,1
	1200	0,46/+142°	0,19/54°	2,3/ 47°	0,26/−131°	8,6
120	40	0,43/ −81°	0,02/63°	33,5/145°	0,82/ −38°	36,2
	200	0,54/−157°	0,05/55°	11,9/ 99°	0,35/ −95°	23,6
	500	0,53/+175°	0,09/60°	5,1/ 77°	0,23/−119°	15,8
	800	0,51/+159°	0,13/59°	3,3/ 63°	0,23/−128°	11,9
	1000	0,48/+149°	0,16/56°	2,7/ 55°	0,24/−131°	10,0
	1200	0,46/+141°	0,19/53°	2,3/ 47°	0,25/−132°	8,5
150	40	0,43/ −82°	0,02/63°	33,6/145°	0,81/ −39°	36,1
	200	0,54/−158°	0,05/55°	11,8/ 99°	0,34/ −96°	23,5
	500	0,53/+175°	0,09/60°	5,1/ 77°	0,23/−121°	15,8
	800	0,51/+159°	0,13/59°	3,3/ 63°	0,23/−129°	11,9
	1000	0,49/+149°	0,16/56°	2,7/ 55°	0,24/−132°	10,1
	1200	0,47/+141°	0,19/53°	2,3/ 47°	0,25/−134°	8,6

→ **s-parameters** (common emitter) at V_{CE} = 15 V; T_{amb} = 25 °C; typical values.

I_C mA	f MHz	s_{ie}	s_{re}	s_{fe}	s_{oe}	G_{UM} dB
50	40	0,48/ −65°	0,02/62°	31,0/148°	0,83/ −30°	36,0
	200	0,53/−149°	0,04/52°	12,0/102°	0,37/ −73°	23,7
	500	0,52/+179°	0,08/58°	5,2/ 78°	0,25/ −89°	16,0
	800	0,50/+162°	0,12/59°	3,4/ 64°	0,26/ −99°	12,2
	1000	0,47/+152°	0,14/57°	2,8/ 55°	0,28/−104°	10,4
	1200	0,45/+144°	0,17/55°	2,3/ 47°	0,31/−109°	8,7
75	40	0,46/ −68°	0,02/62°	32,9/148°	0,82/ −32°	36,2
	200	0,52/−151°	0,04/53°	12,5/101°	0,36/ −79°	23,9
	500	0,51/+178°	0,08/59°	5,4/ 78°	0,24/ −97°	16,2
	800	0,48/+161°	0,12/59°	3,5/ 64°	0,24/−106°	12,3
	1000	0,46/+152°	0,15/57°	2,8/ 56°	0,26/−110°	10,3
	1200	0,44/+144°	0,17/55°	2,4/ 48°	0,28/−114°	8,9
100	40	0,47/ −69°	0,02/62°	33,9/147°	0,81/ −34°	36,3
	200	0,51/−151°	0,04/54°	12,6/101°	0,35/ −82°	23,9
	500	0,50/+178°	0,08/59°	5,5/ 78°	0,23/−101°	16,3
	800	0,48/+161°	0,12/59°	3,5/ 64°	0,23/−109°	12,3
	1000	0,45/+152°	0,15/57°	2,9/ 56°	0,25/−113°	10,5
	1200	0,43/+144°	0,18/54°	2,4/ 48°	0,27/−117°	8,8
120	40	0,47/ −69°	0,02/62°	34,6/146°	0,81/ −34°	36,5
	200	0,51/−151°	0,04/54°	12,7/101°	0,35/ −83°	24,0
	500	0,50/+178°	0,08/60°	5,5/ 78°	0,23/−103°	16,3
	800	0,48/+161°	0,12/59°	3,5/ 64°	0,23/−112°	12,3
	1000	0,45/+152°	0,15/57°	2,9/ 56°	0,24/−115°	10,5
	1200	0,43/+144°	0,18/54°	2,4/ 48°	0,26/−118°	8,8
150	40	0,49/ −70°	0,02/61°	34,8/146°	0,80/ −35°	36,5
	200	0,52/−152°	0,04/54°	12,6/100°	0,34/ −84°	23,9
	500	0,50/+178°	0,08/60°	5,4/ 78°	0,23/−103°	16,1
	800	0,48/+162°	0,12/59°	3,5/ 64°	0,23/−111°	12,3
	1000	0,46/+152°	0,15/57°	2,8/ 55°	0,24/−114°	9,6
	1200	0,44/+144°	0,18/54°	2,4/ 48°	0,27/−117°	8,9

Conditions for Figs 5 and 6:
V_{CE} = 15 V; I_C = 120 mA;
T_{amb} = 25 °C; typical values.

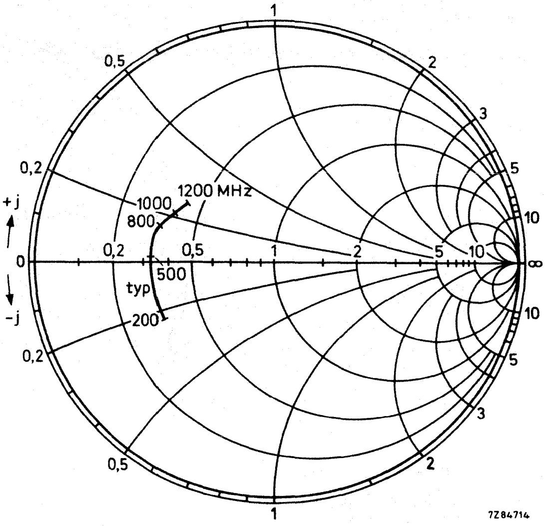

Fig. 5 Input impedance derived from input reflection coefficient s_{ie} co-ordinates in ohm x 50.

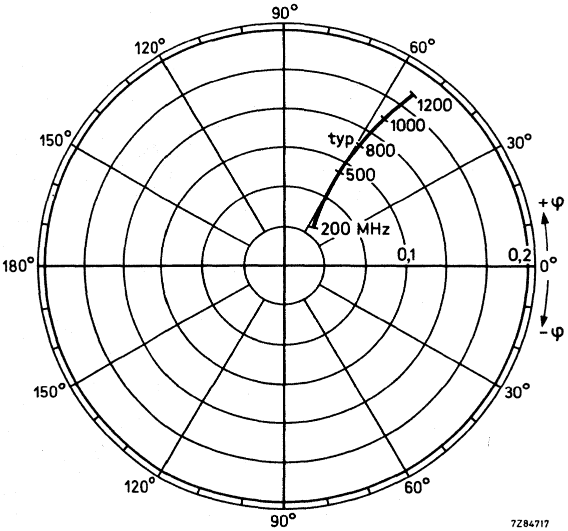

Fig. 6 Reverse transmission coefficient s_{re}.

Conditions for Figs 7 and 8:
V_{CE} = 15 V; I_C = 120 mA;
T_{amb} = 25 °C; typical values.

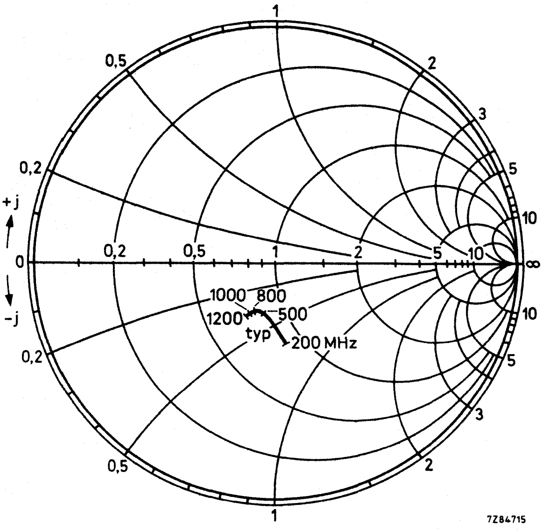

Fig. 7 Output impedance derived from output reflection coefficient s_{oe} co-ordinates in ohm x 50.

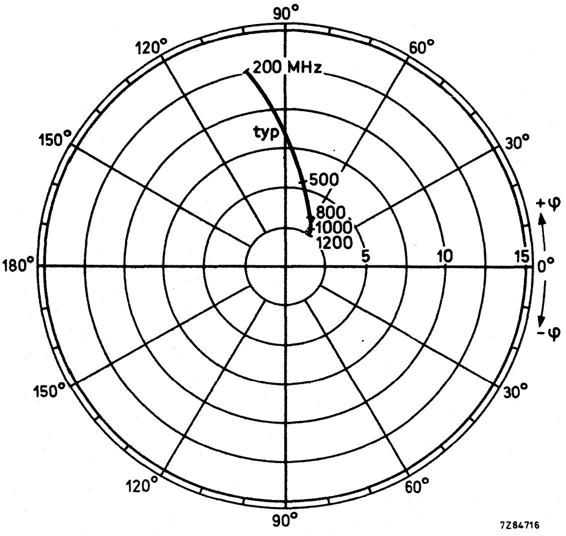

Fig. 8 Forward transmission coefficient s_{fe}.

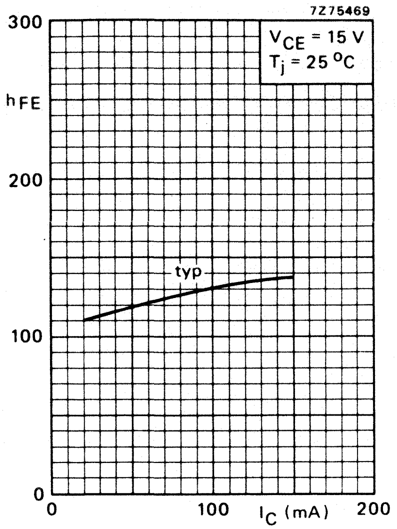

Fig. 9 V_{CE} = 15 V; T_j = 25 °C; typical values.

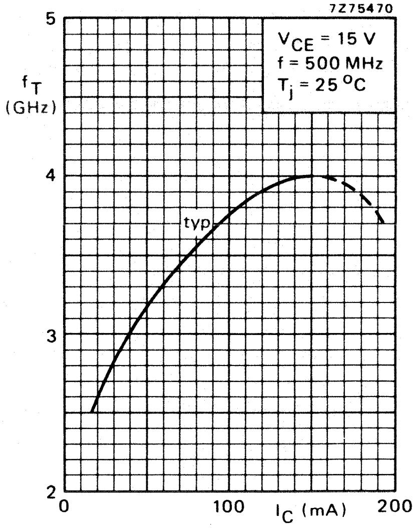

Fig. 10 V_{CE} = 15 V; f = 500 MHz; T_j = 25 °C; typical values.

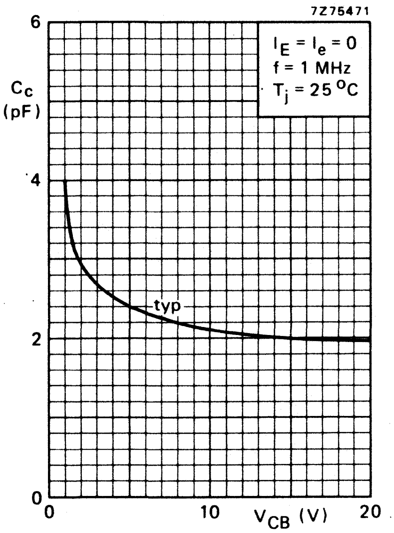

Fig. 11 $I_E = i_e = 0$; f = 1 MHz; T_j = 25 °C; typical values.

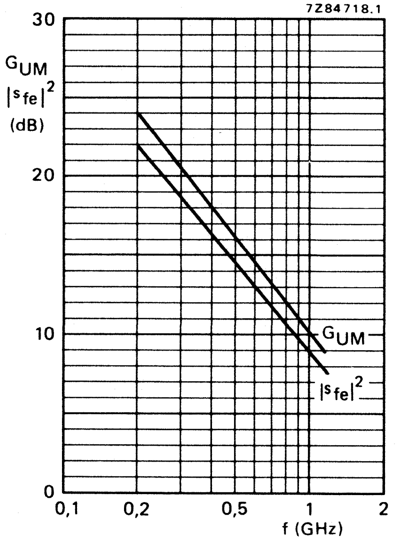

Fig. 12 V_{CE} = 15 V; I_C = 120 mA; T_{amb} = 25 °C; typical values

N-P-N 1 GHz WIDEBAND TRANSISTOR

N-P-N transistor in a plastic SOT-37 envelope, intended for wideband amplification applications. The device features high output voltage capabilities.

QUICK REFERENCE DATA

Collector-base voltage (open emitter)	V_{CBO}	max.	25	V
Collector-emitter voltage (open base)	V_{CEO}	max.	18	V
Collector current (d.c.)	I_C	max.	150	mA
Total power dissipation up to T_{amb} = 45 °C	P_{tot}	max.	1	W
Junction temperature	T_j	max.	175	°C
D.C. current gain I_C = 100 mA; V_{CE} = 10 V	h_{FE}	min.	25	
Transition frequency at f = 500 MHz I_C = 100 mA; V_{CE} = 10 V	f_T	typ.	3,7	GHz
Maximum power gain at f = 300 MHz I_C = 100 mA; V_{CE} = 10 V	G_{UM}	typ.	19,5	dB ←
Output voltage at d_{im} = −60 dB I_C = 100 mA; V_{CE} = 10 V; R_L = 75 Ω; $f_{(p + q - r)}$ = 285,25 MHz	V_o	typ.	1,0	V
Output power at 1 dB gain compression V_{CE} = 10 V; I_C = 100 mA; f = 300 MHz	P_{L1}	typ.	+ 24	dBm
Third order intercept point V_{CE} = 10 V; I_C = 100 mA; f = 300 MHz	ITO	typ.	+ 43	dBm

MECHANICAL DATA

SOT-37 (see Fig. 1).

MECHANICAL DATA

Dimensions in mm

Fig. 1 SOT-37.

Connections:
1. Base
2. Emitter
3. Collector

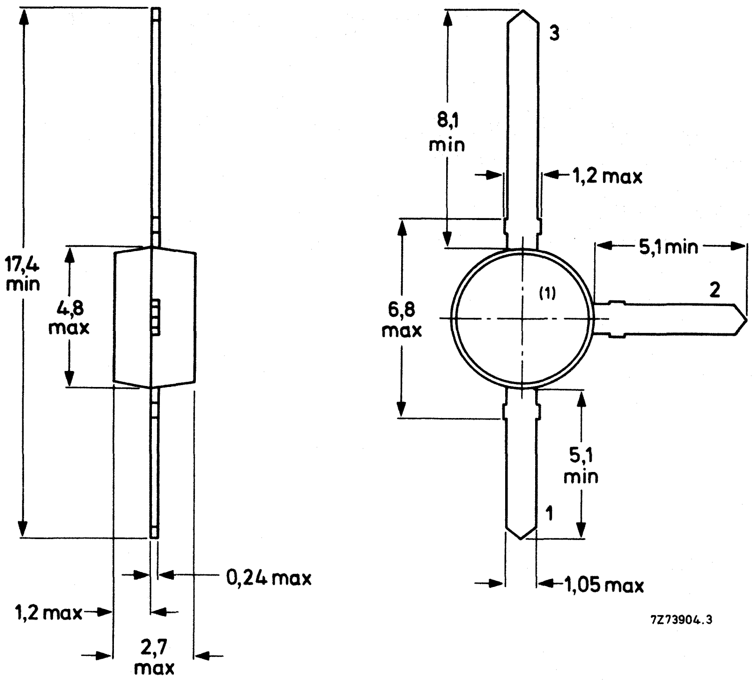

(1) = type number marking.

RATINGS

Limiting values in accordance with the Absolute Maximum System (IEC 134)

Collector-base voltage (open emitter)	V_{CBO}	max.	25	V
Collector-emitter voltage (open base)	V_{CEO}	max.	18	V
Emitter-base voltage (open collector)	V_{EBO}	max.	2	V
Collector current (d.c.)	I_C	max.	150	mA
Total power dissipation up to T_{amb} = 45 °C (see Fig. 2)	P_{tot}	max.	1	W
Storage temperature	T_{stg}	−65 to + 175		°C
Junction temperature	T_j	max.	175	°C

THERMAL RESISTANCE

From junction to case	$R_{th\ j\text{-}c}$	=	50 K/W
From junction to ambient (free air) mounted on a fibre-glass print (see Fig. 2)	$R_{th\ j\text{-}a}$	=	130 K/W

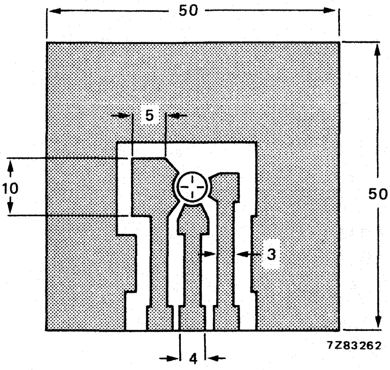

Fig. 2 Requirements for fibre-glass print (Dimensions in mm). Single-sided 35 μm Cu-clad epoxy fibre-glass print, thickness 1,5 mm. Tracks are fully tin-plated. Shaded area is Cu.

CHARACTERISTICS

T_j = 25 °C unless otherwise specified

Collector cut-off current			
$I_E = 0$; $V_{CB} = 15$ V	I_{CBO}	max.	100 μA
D.C. current gain			
$I_C = 100$ mA; $V_{CE} = 10$ V	h_{FE}	min.	25
Transition frequency at f = 500 MHz			
$I_C = 100$ mA; $V_{CE} = 10$ V	f_T	typ.	3,7 GHz
Collector capacitance at f = 1 MHz			
$I_E = i_e = 0$; $V_{CB} = 10$ V	C_c	typ.	2,0 pF
Emitter capacitance at f = 1 MHz			
$I_C = i_c = 0$; $V_{EB} = 0{,}5$ V	C_e	typ.	10 pF
Feedback capacitance at f = 1 MHz			
$I_C = 0$; $V_{CE} = 10$ V	C_{re}	typ.	1,2 pF
Maximum power gain at f = 300 MHz; T_{amb} = 25 °C			
$I_C = 100$ mA; $V_{CE} = 10$ V	G_{UM}	typ.	19,5 dB
Second harmonic distortion (see Fig. 3)			
$I_C = 100$ mA; $V_{CE} = 10$ V; $R_L = 75\ \Omega$; T_{amb} = 25 °C			
$V_p = V_o = 316$ mV = 50 dMmV; $f_p = 66$ MHz $V_q = V_o = 316$ mV = 50 dBmV ; $f_q = 144$ MHz			
Measured at $f_{(p+q)} = 210$ MHz	d_2	typ.	−55 dB

CHARACTERISTICS (continued)

Output voltage at d_{im} = −60 dB (see Fig. 3)
(DIN 45004B); T_{amb} = 25 °C; I_C = 100 mA;
V_{CE} = 10 V; R_L = 75 Ω

$V_p = V_o$ at d_{im} = −60 dB; f_p = 287,25 MHz
$V_q = V_o$ −6 dB; f_q = 294,25 MHz
$V_r = V_o$ −6 dB; f_r = 295,25 MHz

Measured at $f_{(p+q-r)}$ = 285,25 MHz — V_o typ. 1,0 V

Output voltage at d_{im} = −60 dB (see Fig. 3)
(DIN 45004B); T_{amb} = 25 °C; I_C = 90 mA;
V_{CE} = 10 V; R_L = 75 Ω

$V_p = V_o$ at d_{im} = −60 dB; f_p = 797,25 MHz
$V_q = V_o$ −6 dB; f_q = 803,25 MHz
$V_r = V_o$ −6 dB; f_r = 805,25 MHz

Measured at $f_{(p+q-r)}$ = 793,25 MHz — V_o typ. 750 mV

Output power at 1 dB gain compression

→ V_{CE} = 10 V; I_C = 100 mA; f = 300 MHz; T_{amb} = 25 °C	P_{L1}	typ.	+ 24 dBm
V_{CE} = 10 V; I_C = 90 mA; f = 800 MHz; T_{amb} = 25 °C		typ.	+ 22 dBm

Third order intercept point

→ V_{CE} = 10 V; I_C = 100 mA; f = 300 MHz; T_{amb} = 25 °C	ITO	typ.	+ 43 dBm
V_{CE} = 10 V; I_C = 90 mA; f = 800 MHz; T_{amb} = 25 °C		typ.	+ 41 dBm

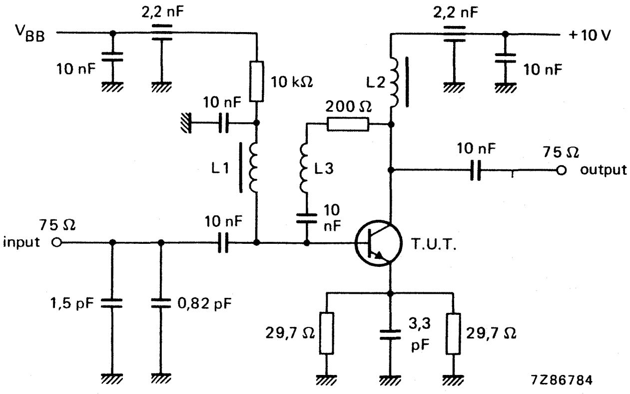

Fig. 3 Intermodulation distortion and second harmonic distortion MATV test circuit.
L1 = L2 = 5 μH Ferroxcube choke
L3 = 2 turns Cu wire (0,5 mm), internal diameter 4 mm, winding pitch 2 mm.

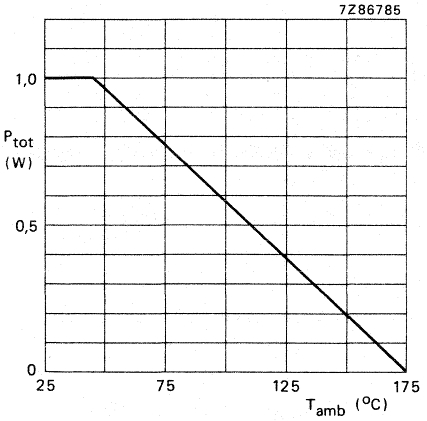

Fig. 4 Power derating curve.

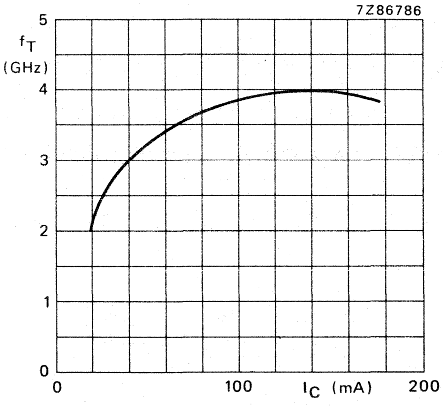

Fig. 5 V_{CE} = 10 V; f = 500 MHz; T_j = 25 °C; typical values.

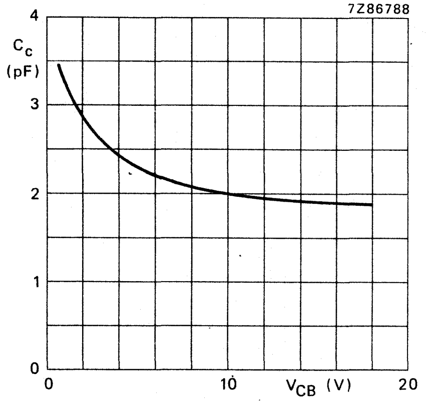

Fig. 6 I_E = 0; f = 1 MHz; T_j = 25 °C; typical values.

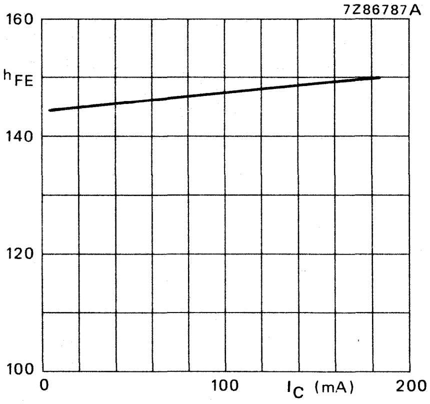

Fig. 7 V_{CE} = 10 V; T_j = 25 °C; typical values.

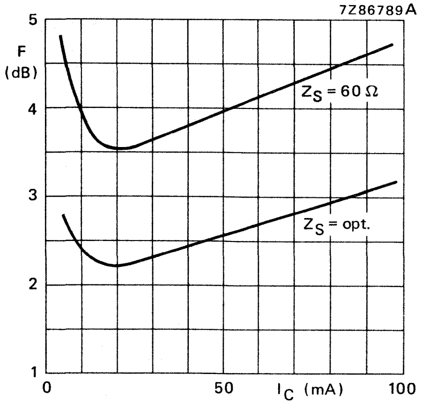

Fig. 8 V_{CE} = 10 V; f = 800 MHz; T_{amb} = 25 °C; typical values.

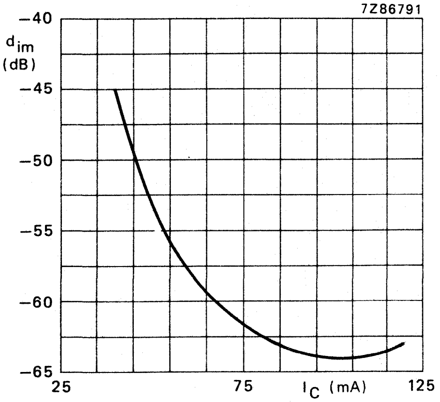

Fig. 9 V_{CE} = 10 V; V_o = 58 dBmV; $f_{(p+q-r)}$ = 285,25 MHz; T_{amb} = 25 °C; typical values.

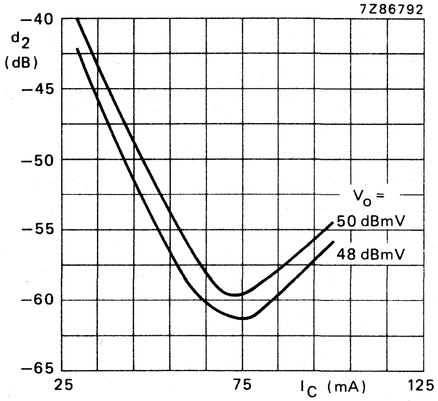

Fig. 10 V_{CE} = 10 V; f_p = 66 MHz; f_p = 144 MHz; $f_{(p+q)}$ = 210 MHz; T_{amb} = 25 °C; typical values.

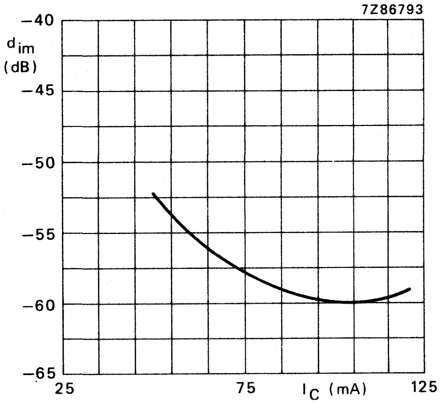

Fig. 11 V_{CE} = 19 V; V_o = 750 mV; $f_{(p+q-r)}$ = 793,25 MHz; T_{amb} = 25 °C; typical values.

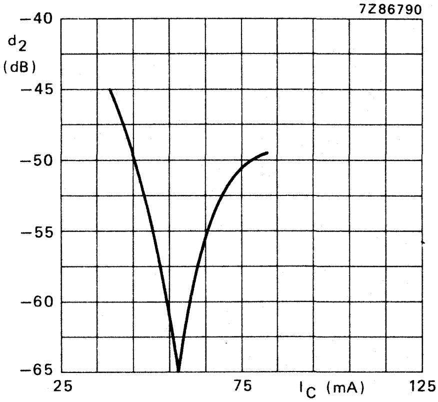

Fig. 12 V_{CE} = 10 V; V_o = 48 dBmV; f_p = 560 MHz; f_q = 250 MHz; $f_{(p+q-r)}$ = 810 MHz; T_{amb} = 25 °C; typical values.

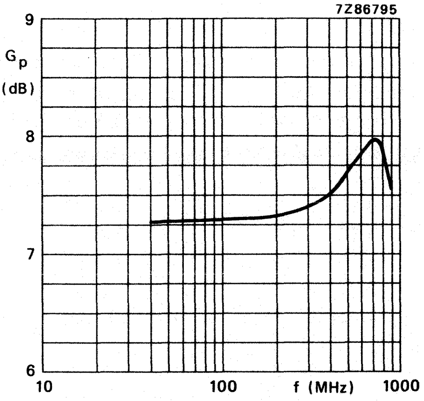

Fig. 13 Gain measured in test circuit (see Fig. 3); T_{amb} = 25 °C; typical values.

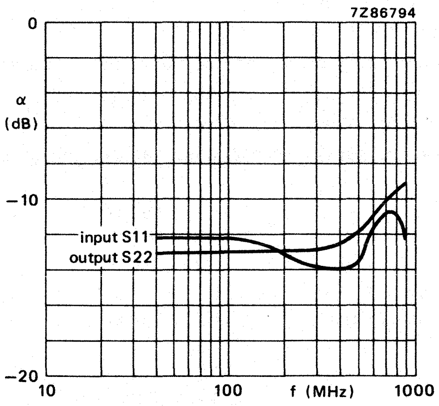

Fig. 14 Return losses measured in test circuit (see Fig. 3); T_{amb} = 25 °C; typical values.

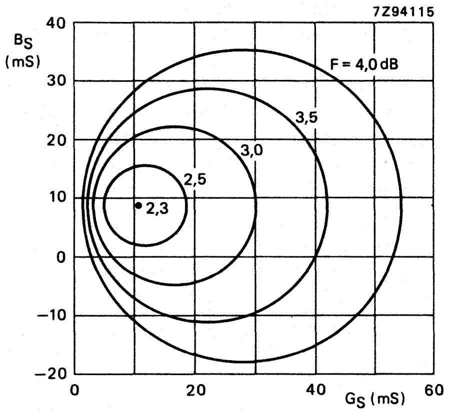

Fig. 15 Circles of constant noise figure; V_{CE} = 10 V; I_C = 20 mA; f = 800 MHz; T_{amb} = 25 °C; typical values.

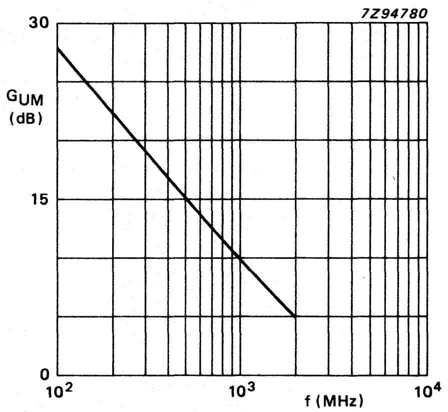

Fig. 16 V_{CE} = 10 V; I_C = 100 mA; T_{amb} = 25 °C; typical values.

s-parameters (common emitter) at V_{CE} = 10 V; T_{amb} = 25 °C; typical values.

I_C mA	f MHz	s_{ie}	s_{fe}	s_{re}	s_{oe}	G_{UM} dB
10	40	0,79/ −45,4°	20,9/153,0°	0,03/ 68,1°	0,89/ −21,2°	37,6
	100	0,66/ −98,3°	14,2/122,8°	0,04/ 49,5°	0,64/ −41,2°	27,8
	200	0,57/−137,7°	8,3/103,0°	0,06/ 46,5°	0,43/ −49,9°	20,9
	500	0,58/−178,3°	3,6/ 76,2°	0,08/ 57,1°	0,33/ −64,5°	13,3
	800	0,57/+162,0°	2,3/ 61,2°	0,12/ 67,7°	0,36/ −80,5°	9,6
	1000	0,59/+150,0°	1,9/ 51,5°	0,15/ 70,1°	0,38/ −90,4°	7,9
	1200	0,63/+138,5°	1,5/ 45,4°	0,18/ 72,9°	0,38/−100,6°	6,6
	1500	0,61/+127,8°	1,3/ 35,7°	0,25/ 72,3°	0,43/−115,6°	5,2
	2000	0,66/+101,8°	1,0/ 25,8°	0,36/ 68,1°	0,48/−143,1°	3,4
20	40	0,71/ −54,4°	29,0/147,8°	0,02/ 66,3°	0,84/ −29,5°	37,5
	100	0,58/−109,5°	18,0/118,0°	0,04/ 51,3°	0,53/ −53,8°	28,3
	200	0,51/−145,8°	10,0/100,8°	0,05/ 53,3°	0,33/ −64,9°	21,8
	500	0,52/+178,2°	4,2/ 77,3°	0,09/ 62,9°	0,23/ −84,0°	14,1
	800	0,51/+160,0°	2,8/ 63,8°	0,14/ 67,7°	0,26/ −96,2°	10,5
	1000	0,53/+148,4°	2,2/ 55,0°	0,17/ 67,4°	0,27/−105,0°	8,7
	1200	0,58/+136,8°	1,8/ 49,4°	0,20/ 68,5°	0,27/−113,0°	7,3
	1500	0,55/+128,4°	1,6/ 39,4°	0,26/ 66,5°	0,33/−125,2°	6,0
	2000	0,59/+103,2°	1,2/ 28,0°	0,35/ 63,0°	0,33/−148,3°	4,2
50	40	0,64/ −63,0°	36,6/142,7°	0,02/ 63,8°	0,78/ −38,2°	37,6
	100	0,51/−118,9°	20,7/114,0°	0,03/ 54,2°	0,45/ −67,5°	28,6
	200	0,46/−151,9°	11,2/ 98,9°	0,05/ 59,5°	0,27/ −83,6°	22,3
	500	0,48/+175,1°	4,7/ 78,1°	0,10/ 66,3°	0,19/−112,1°	14,7
	800	0,47/+158,1°	3,1/ 65,7°	0,15/ 67,6°	0,22/−119,0°	11,1
	1000	0,49/+146,5°	2,5/ 57,8°	0,18/ 66,0°	0,22/−126,4°	9,3
	1200	0,53/+134,6°	2,1/ 52,6°	0,22/ 66,0°	0,21/−135,5°	7,9
	1500	0,51/+127,9°	1,8/ 42,9°	0,27/ 62,6°	0,27/−141,4°	6,6
	2000	0,54/+103,0°	1,4/ 31,4°	0,36/ 58,5°	0,32/−159,4°	4,8
70	40	0,63/ −65,1°	38,0/141,4°	0,02/ 64,5°	0,76/ −40,3°	37,6
	100	0,51/−121,0°	21,1/113,2°	0,03/ 54,8°	0,44/ −70,7°	28,7
	200	0,45/−153,5°	11,5/ 98,5°	0,05/ 60,0°	0,26/ −88,2°	22,5
	500	0,48/+174,7°	4,8/ 78,1°	0,10/ 66,9°	0,19/−118,4°	14,8
	800	0,47/+157,8°	3,1/ 65,9°	0,15/ 67,6°	0,21/ +12,9°	11,1
	1000	0,48/+146,2°	2,5/ 58,2°	0,19/ 65,8°	0,22/−131,8°	9,3
	1200	0,53/+134,3°	2,1/ 53,1°	0,22/ 65,6°	0,21/−141,0°	8,0
	1500	0,50/+127,7°	1,8/ 43,4°	0,28/ 61,9°	0,26/−145,3°	6,6
	2000	0,53/+103,0°	1,4/ 31,9°	0,36/ 57,6°	0,31/−162,4°	4,9
100	40	0,63/ −66,9°	38,9/140,1°	0,02/ 63,1°	0,75/ −42,0°	37,6
	100	0,50/−122,8°	21,1/112,4°	0,03/ 54,8°	0,43/ −73,1°	28,6
	200	0,45/−153,6°	11,4/ 98,0°	0,05/ 60,7°	0,25/ −91,3°	22,4
	500	0,48/+174,2°	4,7/ 77,8°	0,10/ 66,9°	0,19/−122,4°	14,8
	800	0,47/+157,5°	3,1/ 65,8°	0,16/ 67,5°	0,21/−126,3°	11,1
	1000	0,49/+146,0°	2,5/ 58,0°	0,19/ 65,5°	0,22/−135,1°	9,3
	1200	0,53/+134,0°	2,1/ 53,1°	0,22/ 55,2°	0,21/−144,5°	8,0
	1500	0,50/+127,5°	1,8/ 43,4°	0,28/ 61,3°	0,26/−147,9°	6,6
	2000	0,53/+102,9°	1,4/ 32,0°	0,38/ 57,1°	0,30/−164,4°	4,8

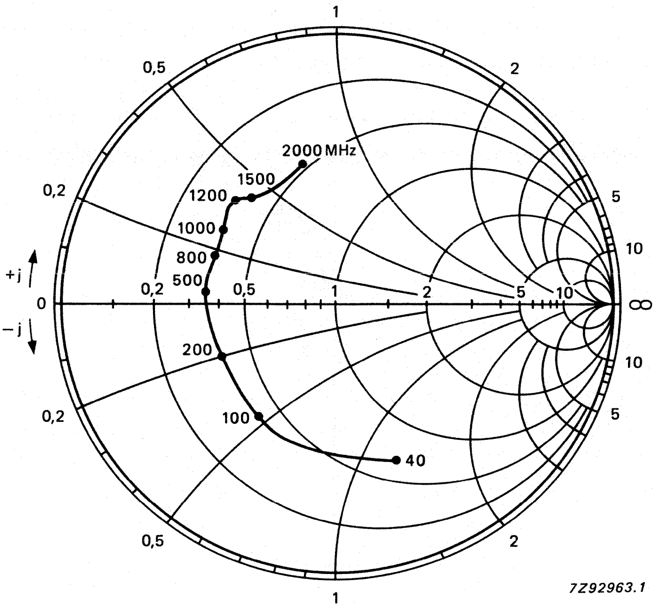

Fig. 17 Input reflection coefficient s_{ie}.

Conditions for Figs 17 and 18:
V_{CE} = 10 V; I_C = 100 mA; T_{amb} = 25 °C; typical values.

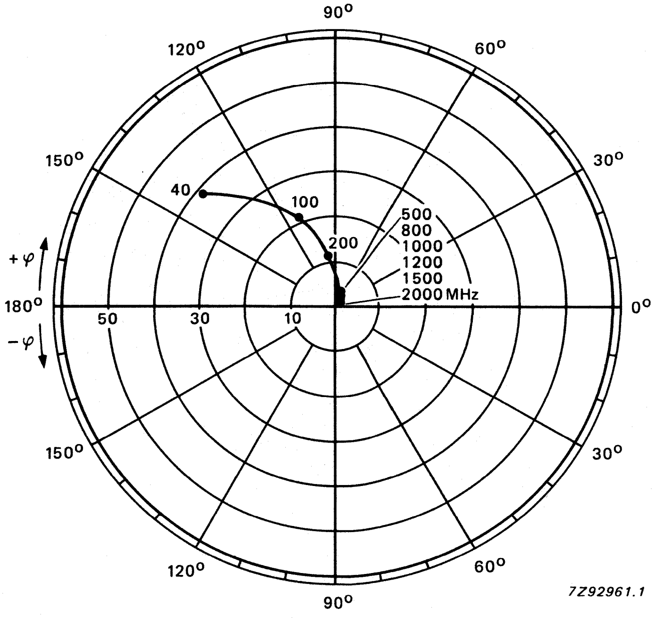

Fig. 18 Forward transmission coefficient s_{fe}.

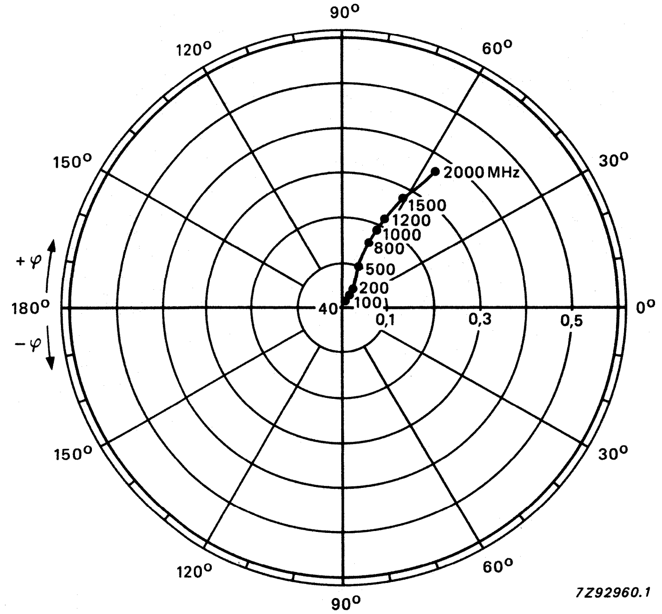

Fig. 19 Reverse transmission coefficient s_{re}.

Conditions for Figs 19 and 20:
V_{CE} = 10 V; I_C = 100 mA; T_{amb} = 25 °C; typical values.

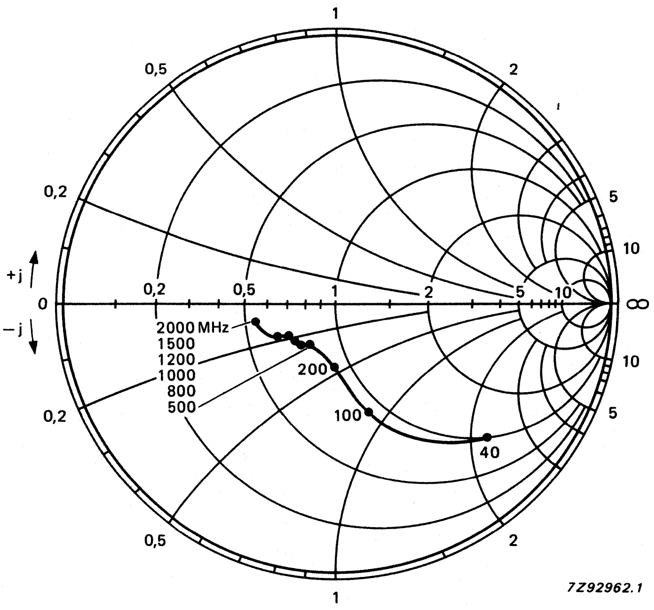

Fig. 20 Output reflection coefficient s_{oe}.

P-N-P 1 GHz WIDEBAND TRANSISTOR ←

P-N-P transistor in a plastic SOT-37 envelope. It is primarily intended for use in u.h.f. and microwave amplifiers such as in aerial amplifiers, radar systems, oscilloscopes, spectrum analysers etc. ←

The transistor features extremely high power gain coupled with good low noise performance.

N-P-N complements are BFR90 and BFR90A.

QUICK REFERENCE DATA

Collector-base voltage (open emitter)	$-V_{CBO}$	max.	20	V
Collector-emitter voltage (open base)	$-V_{CEO}$	max.	15	V
Collector current (d.c.)	$-I_C$	max.	25	mA
Total power dissipation up to $T_{amb} = 60\ ^oC$	P_{tot}	max.	180	mW
Junction temperature	T_j	max.	150	^oC
Transition frequency at f = 500 MHz $-I_C = 14$ mA; $-V_{CE} = 10$ V	f_T	typ.	5,0	GHz
Feedback capacitance at f = 1 MHz $I_C = 0$; $-V_{CE} = 10$ V	C_{re}	typ.	0,45	pF
Noise figure at optimum source impedance $-I_C = 4$ mA; $-V_{CE} = 10$ V; f = 800 MHz; $T_{amb} = 25\ ^oC$	F	typ.	2,4	dB ←

MECHANICAL DATA (see Fig. 1)

MECHANICAL DATA

Dimensions in mm

Fig. 1 SOT-37.

Connections

1. Base
2. Emitter
3. Collector

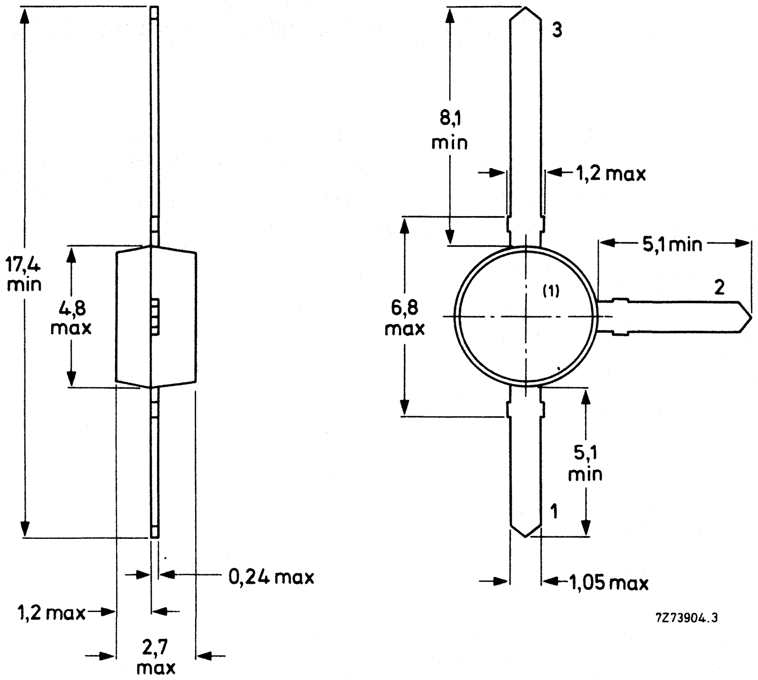

(1) = type number marking.

RATINGS

Limiting values in accordance with the Absolute Maximum System (IEC 134)

Collector-base voltage (open emitter)	$-V_{CBO}$	max.	20	V
Collector-emitter voltage (open base)	$-V_{CEO}$	max.	15	V
Emitter-base voltage (open collector)	$-V_{EBO}$	max.	2	V
Collector current (d.c.)	$-I_C$	max.	25	mA
Collector current (peak value) at $f > 1$ MHz	$-I_{CM}$	max.	35	mA
Total power dissipation up to T_{amb} = 60 °C	P_{tot}	max.	180	mW
Storage temperature	T_{stg}		−65 to +150	°C
Junction temperature	T_j	max.	150	°C

THERMAL RESISTANCE

From junction to ambient in free air mounted on a fibre-glass print of 40 mm x 25 mm x 1 mm	$R_{th\ j\text{-}a}$	=	500	K/W

CHARACTERISTICS

T_j = 25 °C unless otherwise specified

Collector cut-off current $I_E = 0; -V_{CB} = 10$ V	$-I_{CBO}$	max.	50	nA
D.C. current gain $-I_C = 14$ mA; $-V_{CE} = 10$ V	h_{FE}	min.	20	
Transition frequency at f = 500 MHz $-I_C = 14$ mA; $-V_{CE} = 10$ V	f_T	typ.	5,0	GHz
Collector capacitance at f = 1 MHz $I_E = I_e = 0; -V_{CB} = 10$ V	C_c	typ.	0,65	pF
Emitter capacitance at f = 1 MHz $I_C = I_c = 0; -V_{EB} = 0,5$ V	C_e	typ.	1,2	pF
Feedback capacitance at f = 1 MHz $I_C = 0; -V_{CE} = 10$ V	C_{re}	typ.	0,45	pF
Noise figure at optimum source impedance $-I_C = 4$ mA; $-V_{CE} = 10$ V; f = 800 MHz; $T_{amb} = 25$ °C	F	typ.	2,4	dB

Maximum unilateral power gain (s_{re} assumed to be zero)

$$G_{UM} = 10 \log \frac{|s_{fe}|^2}{[1-|s_{ie}|^2]\,[1-|s_{oe}|^2]}$$

$-I_C = 14$ mA; $-V_{CE} = 10$ V; $T_{amb} = 25$ °C

f = 500 MHz	G_{UM}	typ.	18,0	dB
f = 800 MHz	G_{UM}	typ.	14,0	dB

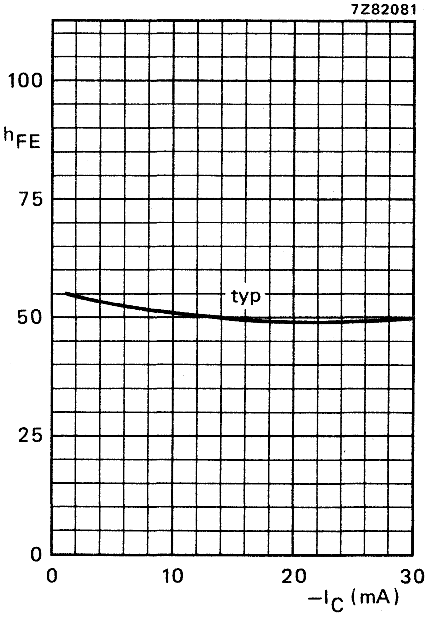

Fig. 2 $-V_{CE} = 10$ V; $T_j = 25$ °C; typical values.

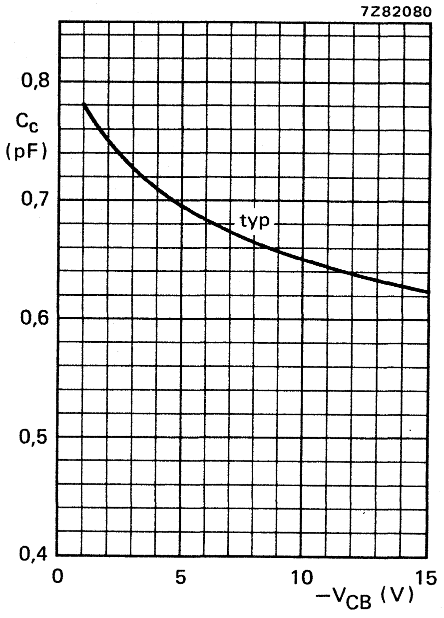

Fig. 3 $I_E = i_e = 0$; f = 1 MHz; $T_j = 25$ °C; typical values.

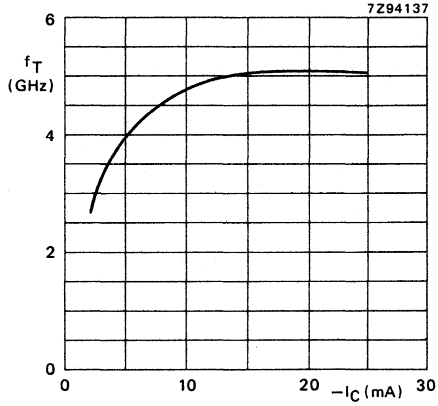

Fig. 4 $-V_{CE}$ = 10 V; f = 500 MHz; T_j = 25 °C; typical values.

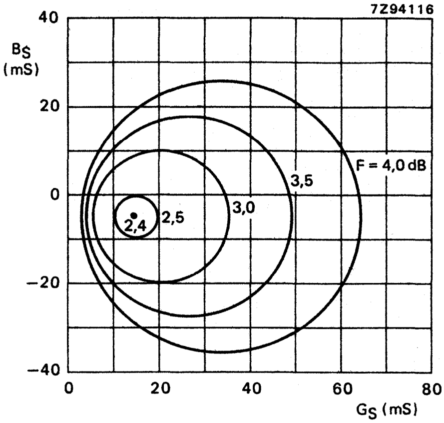

Fig. 5 Circles of constant noise figure. $-V_{CE}$ = 10 V; $-I_C$ = 4 mA; f = 800 MHz; T_{amb} = 25 °C; typical values.

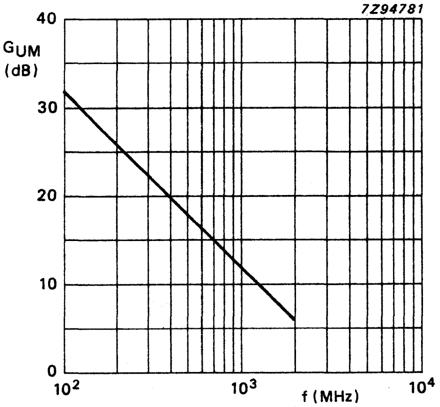

Fig. 6 $-V_{CE}$ = 10 V; $-I_C$ = 14 mA; T_{amb} = 25 °C; typical values.

s-parameters (common emitter) at $-V_{CE}$ = 10 V; T_{amb} = 25 °C; typical values.

I_C mA	f MHz	s_{ie}	s_{fe}	s_{re}	s_{oe}	G_{UM} dB
2	40	0,89/ −4,7°	6,6/175,9°	0,01/ 86,5°	1,00/ −1,9°	44,8
	100	0,89/ −15,1°	6,5/164,8°	0,03/ 80,9°	1,01/ −8,5°	42,5
	200	0,79/ −33,5°	5,7/150,1°	0,05/ 73,4°	0,90/−16,3°	26,7
	500	0,58/ −73,1°	4,4/118,5°	0,10/ 59,2°	0,78/−31,2°	18,6
	800	0,40/−100,3°	3,3/100,1°	0,13/ 56,7°	0,65/−39,3°	13,4
	1000	0,31/−116,4°	2,8/ 88,5°	0,14/ 54,3°	0,62/−42,4°	11,4
	1200	0,24/−142,0°	2,3/ 79,0°	0,15/ 53,4°	0,58/−45,6°	9,3
	1500	0,23/−166,8°	2,0/ 71,5°	0,18/ 56,1°	0,50/−50,3°	7,6
	2000	0,21/+146,0°	1,6/ 56,1°	0,21/ 56,3°	0,44/−64,2°	5,0
5	40	0,73/ −8,3°	13,0/172,7°	0,01/ 85,8°	0,97/ −4,1°	38,5
	100	0,70/ −23,9°	12,4/157,1°	0,02/ 78,3°	0,95/−13,7°	35,4
	200	0,56/ −47,2°	10,0/138,3°	0,04/ 71,4°	0,80/−23,0°	26,0
	500	0,33/ −91,9°	6,1/106,3°	0,08/ 64,6°	0,61/−34,5°	18,2
	800	0,21/−118,3°	4,1/ 91,1°	0,11/ 66,3°	0,52/−39,5°	13,9
	1000	0,16/−140,0°	3,4/ 82,0°	0,13/ 65,0°	0,49/−41,8°	12,0
	1200	0,14/−179,1°	2,9/ 74,8°	0,15/ 63,9°	0,46/−43,3°	10,2
	1500	0,16/+168,5°	2,4/ 68,3°	0,18/ 65,1°	0,41/−49,2°	8,6
	2000	0,18/+121,9°	1,9/ 55,1°	0,23/ 62,0°	0,36/−62,4°	6,1
10	40	0,54/ −12,2°	19,2/168,8°	0,01/ 80,9°	0,95/ −6,3°	37,5
	100	0,50/ −32,7°	17,4/149,7°	0,02/ 76,7°	0,89/−17,8°	32,9
	200	0,36/ −59,7°	12,9/129,0°	0,03/ 72,8°	0,70/−26,5°	25,8
	500	0,20/−110,8°	6,8/ 99,3°	0,07/ 71,2°	0,51/−33,8°	18,2
	800	0,13/−138,7°	4,5/ 86,7°	0,11/ 72,5°	0,46/−37,9°	14,1
	1000	0,11/−170,2°	3,7/ 78,8°	0,13/ 70,5°	0,43/−40,0°	12,3
	1200	0,13/+150,8°	3,1/ 72,4°	0,15/ 68,9°	0,41/−40,9°	10,6
	1500	0,16/+151,1°	2,6/ 66,3°	0,18/ 68,8°	0,37/−47,6°	8,9
	2000	0,19/+110,7°	2,0/ 54,2°	0,23/ 64,4°	0,32/−61,0°	6,5
14	40	0,44/ −14,2°	21,8/167,5°	0,01/ 82,2°	0,93/ −7,1°	36,5
	100	0,39/ −37,5°	19,1/146,9°	0,02/ 78,0°	0,86/−19,3°	32,2
	200	0,27/ −66,9°	13,7/125,8°	0,03/ 74,2°	0,66/−27,3°	25,6
	500	0,16/−124,1°	6,9/ 97,8°	0,07/ 73,6°	0,49/−32,9°	18,0
	800	0,12/−153,3°	4,5/ 85,2°	0,11/ 74,3°	0,44/−36,9°	14,0
	1000	0,12/+175,7°	3,7/ 77,7°	0,13/ 72,3°	0,42/−39,0°	12,3
	1200	0,15/+143,0°	3,1/ 71,5°	0,15/ 70,6°	0,40/−39,7°	10,6
	1500	0,17/+145,1°	2,6/ 65,5°	0,19/ 69,9°	0,36/−46,9°	9,0
	2000	0,20/+108,3°	2,0/ 53,4°	0,23/ 65,3°	0,31/−60,3°	6,5

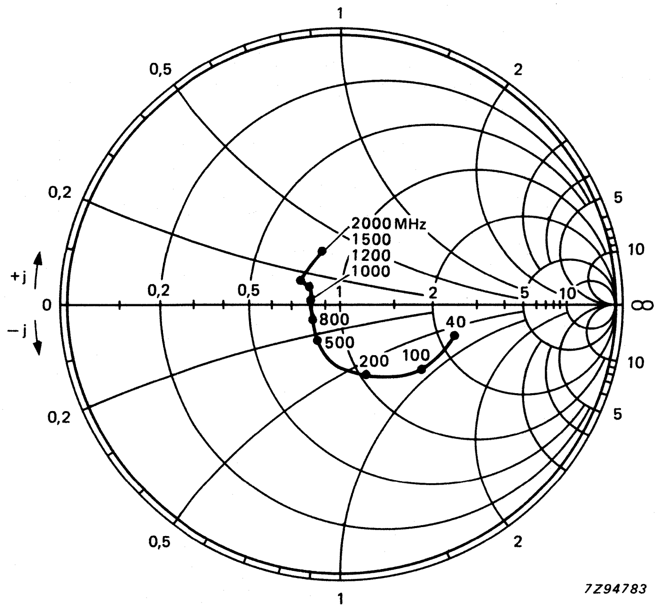

Fig. 7 Input impedance, derived from input reflection coefficient s_{ie} coordinates, in ohm x 50.

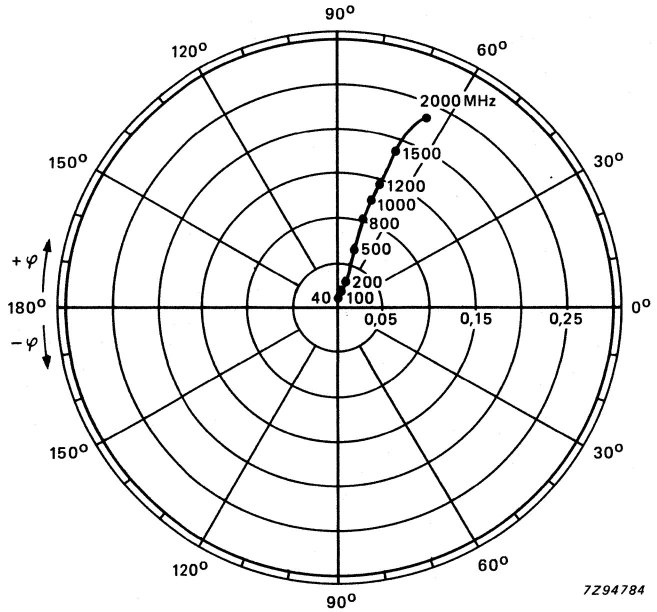

Fig. 8 Reverse transmission coefficient s_{re}.

Conditions for Figs 7 to 10: $-V_{CE}$ = 10 V; $-I_C$ = 14 mA; T_{amb} = 25 °C; typical values.

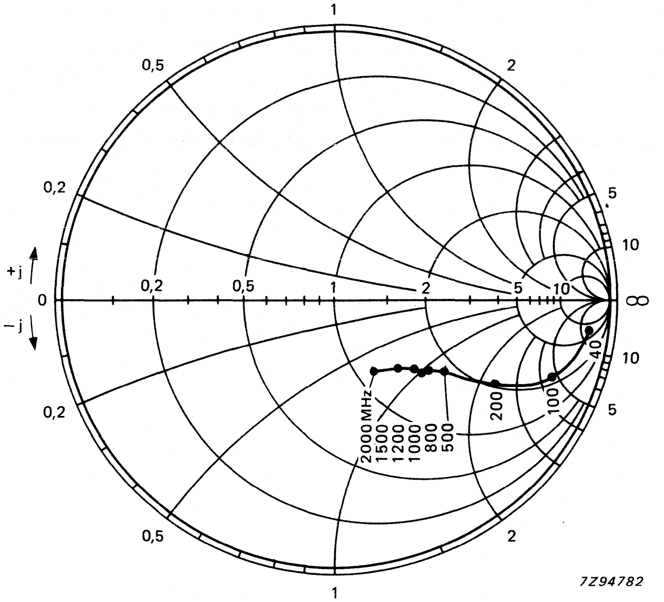

Fig. 9 Output impedance, derived from output reflection coefficient s_{oe} coordinates, in ohm x 50.

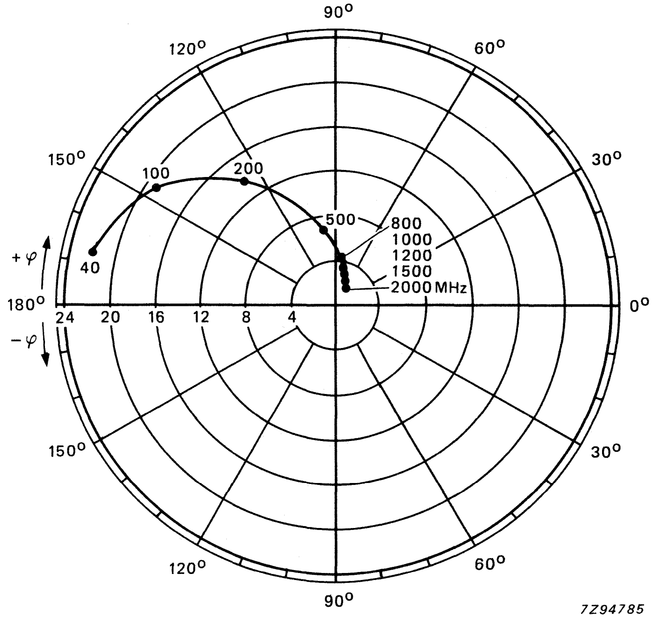

Fig. 10 Forward transmission coefficient s_{fe}.

P-N-P 2 GHz WIDEBAND TRANSISTOR

P-N-P transistor in a sub-miniature HERMETICALLY SEALED micro-stripline envelope. It is primarily intended for use in u.h.f. and microwave amplifiers such as aerial amplifiers, radar systems, oscilloscopes, spectrum analysers etc.

The transistor features extremely high power gain coupled with good low noise performance.

N-P-N complement is BFP90A.

QUICK REFERENCE DATA

Collector-base voltage	$-V_{CBO}$	max.	20	V	
Collector-emitter voltage	$-V_{CEO}$	max.	15	V	
Collector current (d.c.)	$-I_C$	max.	30	mA	
Total power dissipation up to T_{amb} = 125 °C	P_{tot}	max.	250	mW	
Junction temperature	T_j	max.	175	°C	
D.C. current gain					
$-I_C$ = 14 mA; $-V_{CE}$ = 10 V	h_{FE}	min.	20		←
Transition frequency at f = 500 MHz					
$-I_C$ = 14 mA; $-V_{CE}$ = 10 V	f_T	typ.	5,0	GHz	
Maximum unilateral power gain					←
$-I_C$ = 14 mA; $-V_{CE}$ = 10 V					
at f = 500 MHz	G_{UM}	typ.	20,5	dB	
at f = 800 MHz		typ.	16,5	dB	

MECHANICAL DATA

SOT-173 (see Fig. 1).

MECHANICAL DATA

Dimensions in mm

Fig. 1 SOT-173.

Marking code: C1

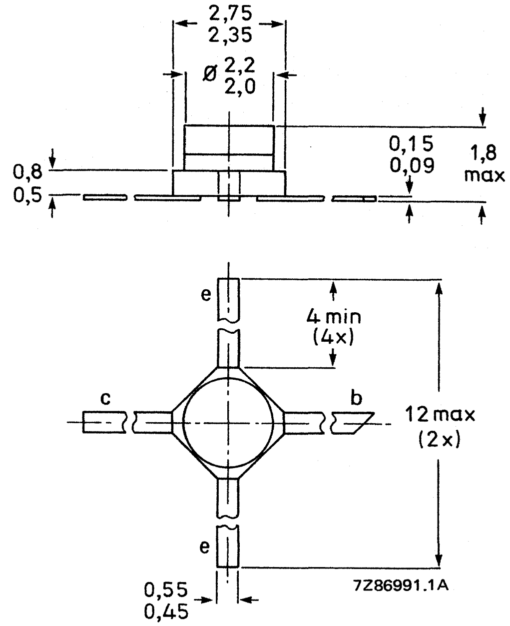

RATINGS

Limiting values in accordance with the Absolute Maximum System (IEC 134)

Collector-base voltage (open emitter)	$-V_{CBO}$	max.	20	V
Collector-emitter voltage (open base)	$-V_{CEO}$	max.	15	V
Emitter-base voltage (open collector)	$-V_{EBO}$	max.	2	V
Collector current (d.c.)	$-I_C$	max.	30	mA
Total power dissipation up to T_{amb} = 125 °C mounted on a ceramic substrate of 0,7 mm x 10 cm^2	P_{tot}	max.	250	mW
Storage temperature	T_{stg}		−65 to +150	°C
Junction temperature	T_j	max.	175	°C

THERMAL RESISTANCE

→ From junction to ambient in free air mounted on a ceramic substrate of 0,7 mm x 10 cm^2	$R_{th\ j\text{-}a}$	200 K/W

CHARACTERISTICS

$T_j = 25$ °C unless otherwise specified

Collector cut-off current $I_E = 0$; $-V_{CB} = 10$ V	$-I_{CBO}$	max.	50 nA
D.C. current gain $-I_C = 14$ mA; $-V_{CE} = 10$ V	h_{FE}	min. typ.	20 50
Transition frequency at f = 500 MHz $-I_C = 14$ mA; $-V_{CE} = 10$ V	f_T	typ.	5,0 GHz
Collector capacitance at f = 1 MHz $I_E = I_e = 0$; $-V_{CB} = 10$ V	C_c	typ.	0,65 pF
Emitter capacitance at f = 1 MHz $I_C = I_c = 0$; $-V_{EB} = 0,5$ V	C_e	typ.	1,1 pF
Feedback capacitance at f = 1 MHz $I_C = 0$; $-V_{CE} = 10$ V	C_{re}	typ.	0,45 pF

Maximum unilateral power gain (s_{re} assumed to be zero)

$$G_{UM} = 10 \log \frac{|s_{fe}|^2}{[1-|s_{ie}|^2]\,[1-|s_{oe}|^2]}$$ ←

at $-I_C = 14$ mA; $-V_{CE} = 10$ V; $T_{amb} = 25$ °C f = 500 MHz f = 800 MHz	G_{UM}	 typ. typ.	 20,5 dB 16,5 dB
Noise figures at f = 800 MHz; Z_S = opt.; $T_{amb} = 25$ °C $-I_C = 4$ mA; $-V_{CE} = 10$ V $-I_C = 14$ mA; $-V_{CE} = 10$ V	F	 typ. typ.	 2,5 dB 3,5 dB

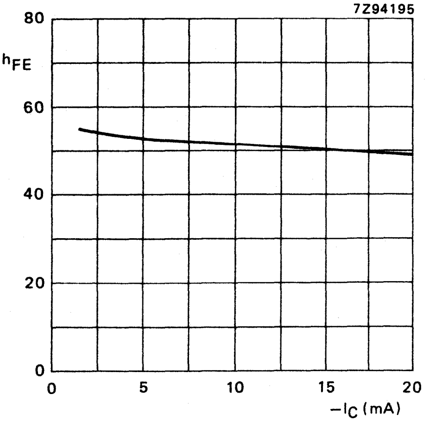

Fig. 2 $-V_{CE}$ = 10 V; T_j = 25 °C; typical values.

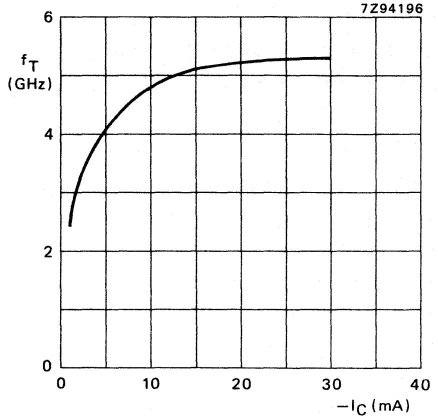

Fig. 3 $-V_{CE}$ = 10 V; f = 500 MHz; T_j = 25 °C; typical values.

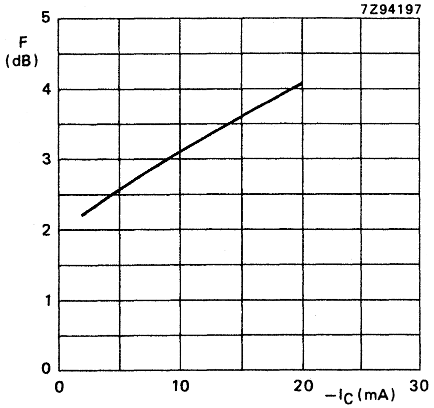

Fig. 4 $-V_{CE}$ = 10 V; f = 800 MHz; T_{amb} = 25 °C; Z_s = optimum; typical values.

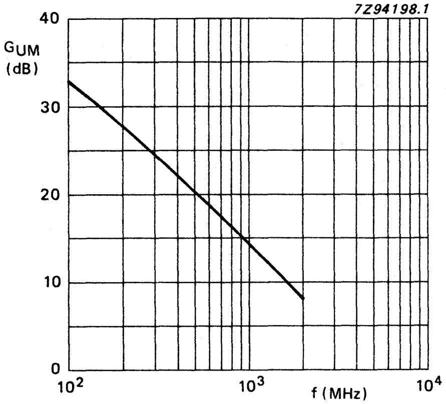

Fig. 5 $-V_{CE}$ = 10 V; $-I_C$ = 14 mA; T_{amb} = 25 °C; typical values.

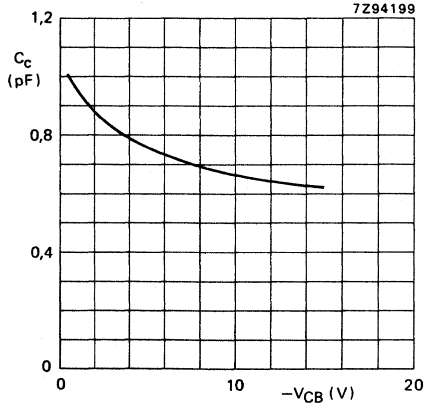

Fig. 6 $I_E = I_e = 0$; f = 1 MHz; T_j = 25 °C; typical values.

s-parameters (common-emitter) at $-V_{CE}$ = 10 V; T_{amb} = 25 °C; typical values.

I_C mA	f MHz	s_{ie}	s_{fe}	s_{re}	s_{oe}	G_{UM} dB
2	40	0,87/ +8,2°	6,4/174,8°	0,011/ 84,6°	0,99/ −3,5°	39,3
	100	0,85/ −20,5°	6,3/165,9°	0,026/ 79,1°	0,98/ −8,7°	35,6
	200	0,81/ −39,7°	5,9/151,5°	0,050/ 70,1°	0,93/−16,4°	28,7
	500	0,68/ −84,3°	4,4/122,4°	0,094/ 51,5°	0,79/−31,4°	19,8
	800	0,59/−112,1°	3,2/103,5°	0,116/ 43,6°	0,70/−38,8°	14,9
	1000	0,54/−125,2°	2,7/ 94,6°	0,124/ 41,0°	0,66/−42,3°	12,6
	1200	0,52/−137,2°	2,3/ 86,3°	0,133/ 20,0°	0,65/−45,7°	10,9
	1500	0,47/−149,4°	1,7/ 73,8°	0,140/ 34,3°	0,64/−46,7°	8,2
	2000	0,44/−169,4°	1,4/ 59,6°	0,157/ 31,7°	0,61/−54,1°	6,0
5	40	0,72/ −13,1°	12,9/172,0°	0,010/ 82,6°	0,98/ −5,8°	39,4
	100	0,69/ −32,2°	12,3/159,6°	0,023/ 74,9°	0,94/−14,1°	33,9
	200	0,64/ −60,2°	10,8/141,4°	0,041/ 64,1°	0,84/−24,9°	28,3
	500	0,54/−112,2°	6,7/111,8°	0,070/ 19,5°	0,62/−39,7°	20,1
	800	0,50/−137,3°	4,6/ 95,5°	0,085/ 47,2°	0,53/−44,5°	15,9
	1000	0,47/−148,5°	3,7/ 88,1°	0,094/ 46,8°	0,50/−46,2°	13,7
	1200	0,46/−158,2°	3,1/ 81,5°	0,103/ 46,6°	0,49/−48,6°	12,1
	1500	0,44/−169,7°	2,5/ 71,1°	0,117/ 44,5°	0,49/−47,9°	10,0
	2000	0,44/+173,2°	1,9/ 58,5°	0,139/ 42,8°	0,47/−54,0°	7,7
10	40	0,55/ −19,4°	19,1/169,1°	0,009/ 80,3°	0,96/ −8,3°	38,2
	100	0,53/ −46,6°	17,7/153,6°	0,020/ 71,4°	0,89/−19,4°	33,2
	200	0,50/—82,2°	14,4/133,1°	0,033/ 60,6°	0,74/−31,9°	27,9
	500	0,47/−133,7°	7,8/105,0°	0,054/ 51,9°	0,50/−44,1°	20,2
	800	0,46/−153,7°	5,2/ 90,9°	0,069/ 52,8°	0,42/−46,7°	16,2
	1000	0,45/−162,5°	4,2/ 84,6°	0,079/ 53,3°	0,41/−47,4°	14,2
	1200	0,46/−170,3°	3,5/ 78,7°	0,088/ 53,2°	0,40/−49,5°	12,6
	1500	0,45/−178,8°	2,8/ 69,6°	0,106/ 51,6°	0,40/−47,4°	10,8
	2000	0,46/+166,7°	2,2/ 58,2°	0,128/ 49,9°	0,39/−52,9°	8,5

s-parameters (common emitter) at $-V_{CE}$ = 10 V; T_{amb} = 25 °C; typical values.

I_C mA	f MHz	s_{ie}	s_{fe}	s_{re}	s_{oe}	G_{UM} dB
14	40	0,46/ −24,2°	22,3/168,0°	0,008/ 79,0°	0,94/ −9,2°	37,3
	100	0,45/ −56,1°	20,1/151,0°	0,019/ 69,9°	0,86/−21,2°	32,9
	200	0,45/ −94,5°	15,6/130,6°	0,030/ 59,9°	0,70/−34,0°	27,8
	500	0,47/−142,0°	8,3/102,9°	0,049/ 54,1°	0,46/−44,4°	20,5
	800	0,48/−159,2°	5,4/ 89,6°	0,064/ 54,9°	0,39/−46,5°	16,5
	1000	0,47/−169,9°	4,4/ 83,9°	0,075/ 55,8°	0,38/−46,2°	14,6
	1200	0,47/−174,6°	3,7/ 78,8°	0,084/ 55,8°	0,37/−47,5°	13,1
	1500	0,46/+174,6°	2,8/ 68,3°	0,099/ 54,1°	0,37/−46,9°	10,6
	2000	0,47/+160,6°	2,2/ 57,0°	0,121/ 52,1°	0,35/−52,5°	8,3
20	40	0,35/ −31,2°	25,1/166,3°	0,007/ 77,6°	0,93/−10,4°	37,3
	100	0,38/ −70,2°	22,3/148,0°	0,017/ 68,7°	0,83/−23,7°	32,7
	200	0,42/−110,1°	16,8/126,4°	0,027/ 59,8°	0,65/−36,5°	27,7
	500	0,47/−151,9°	8,5/100,4°	0,044/ 56,7°	0,42/−45,4°	20,5
	800	0,48/−166,0°	5,5/ 87,3°	0,060/ 58,4°	0,37/−46,6°	16,6
	1000	0,48/−173,2°	4,4/ 81,9°	0,070/ 58,8°	0,36/−46,8°	14,6
	1200	0,49/−179,4°	3,7/ 76,4°	0,079/ 58,4°	0,35/−48,8°	13,1
	1500	0,48/+172,6°	2,9/ 67,9°	0,095/ 57,0°	0,35/−45,6°	10,8
	2000	0,49/+159,6°	2,2/ 56,8°	0,117/ 55,4°	0,34/−51,4°	8,5
25	40	0,29/ −38,0°	26,4/165,4°	0,007/ 76,2°	0,91/−10,9°	36,5
	100	0,35/ −80,7°	23,2/146,6°	0,016/ 67,8°	0,81/−24,7°	32,5
	200	0,41/−119,2°	17,1/124,4°	0,025/ 60,1°	0,63/−37,1°	27,7
	500	0,48/−156,2°	8,5/ 99,0°	0,042/ 58,2°	0,41/−44,6°	20,5
	800	0,50/−168,8°	5,5/ 86,4°	0,057/ 60,0°	0,36/−45,4°	16,7
	1000	0,50/−175,2°	4,4/ 80,9°	0,067/ 60,2°	0,35/−45,5°	14,7
	1200	0,51/+178,6°	3,7/ 75,5°	0,077/ 59,7°	0,34/−47,6°	13,2
	1500	0,49/+170,8°	2,8/ 67,0°	0,093/ 58,2°	0,35/−44,9°	10,8
	2000	0,50/+158,2°	2,2/ 56,2°	0,114/ 56,8°	0,34/−50,8°	8,5

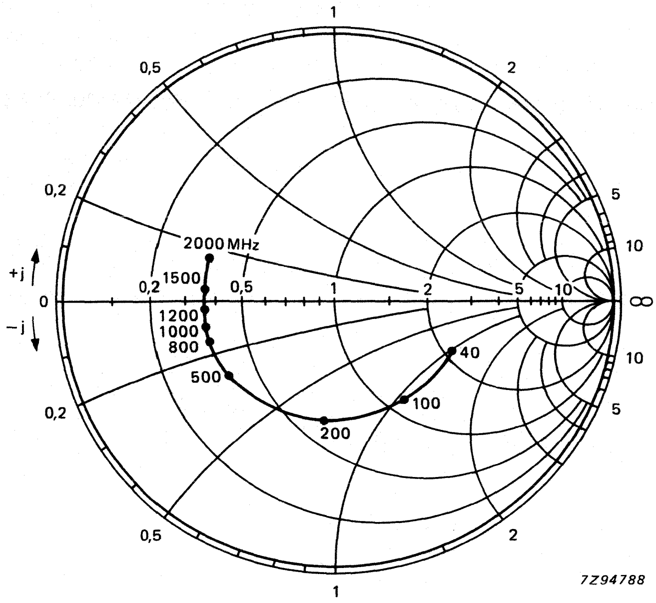

Fig. 7 $-V_{CE}$ = 10 V; $-I_C$ = 14 mA; T_{amb} = 25 °C; typical values.

Input impedance derived from input reflection coefficient s_{ie} co-ordinates in ohm x 50.

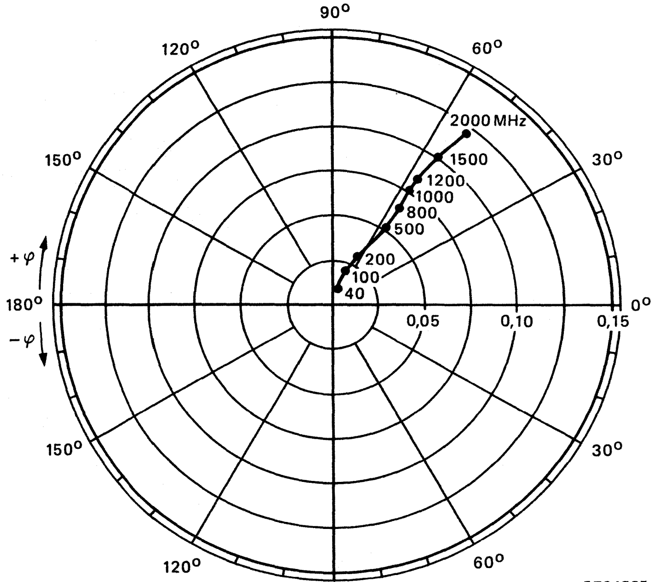

Fig. 8 $-V_{CE}$ = 10 V; $-I_C$ = 14 mA; T_{amb} = 25 °C; typical values.

Reverse transmission coefficient s_{re}.

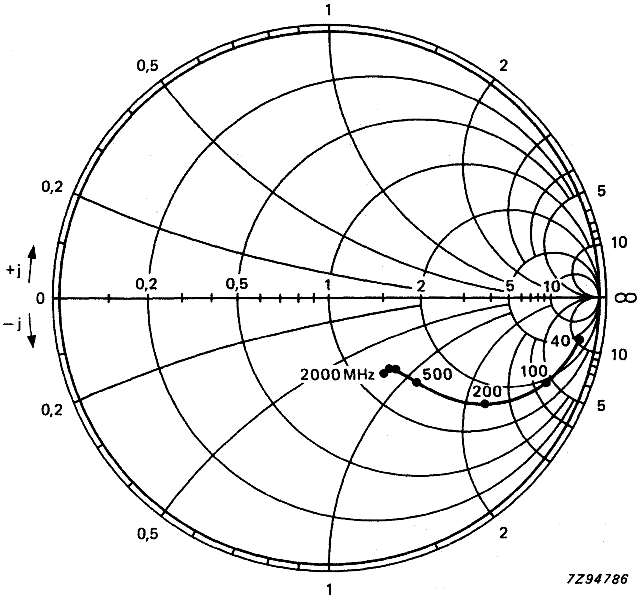

Fig. 9 $-V_{CE}$ = 10 V; $-I_C$ = 14 mA; T_{amb} = 25 °C; typical values.

→ Output impedance derived from output reflection coefficient s_{oe} co-ordinates in ohm x 50.

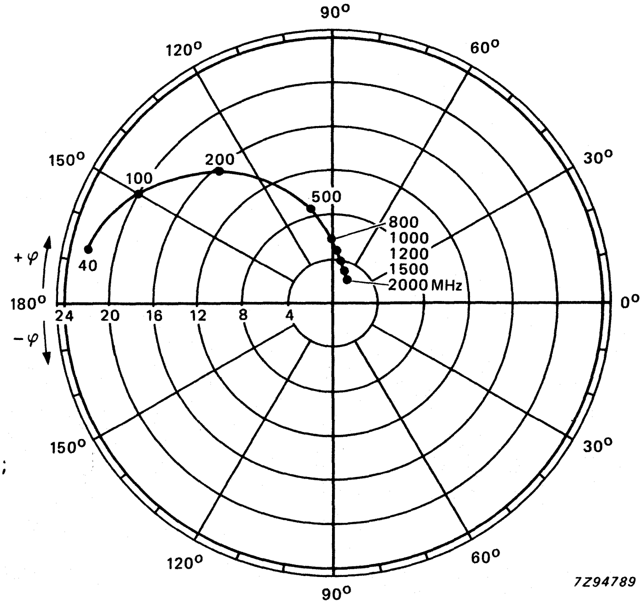

Fig. 10 $-V_{CE}$ = 10 V; $-I_C$ = 14 mA; T_{amb} = 25 °C; typical values.

→ Forward transmission coefficient s_{fe}.

P-N-P H.F. WIDEBAND TRANSISTOR

P-N-P transistor in a TO-72 metal envelope with insulated electrodes and a shield lead connected to the case. It is primarily intended for use in u.h.f. and microwave amplifiers such as in aerial amplifiers, radar systems, oscilloscopes, spectrum analysers etc.

The transistor features extremely high power gain coupled with good low noise performance.

N-P-N complement is BFQ53.

QUICK REFERENCE DATA

Collector-base voltage (open emitter)	$-V_{CBO}$	max.	20 V
Collector-emitter voltage (open base)	$-V_{CEO}$	max.	15 V
Collector current (d.c.)	$-I_C$	max.	25 mA
Total power dissipation up to T_{amb} = 65 °C	P_{tot}	max.	150 mW
Junction temperature	T_j	max.	200 °C
Transition frequency at f = 500 MHz $-I_C$ = 14 mA; $-V_{CE}$ = 10 V	f_T	typ.	5,0 GHz
Feedback capacitance at f = 1 MHz I_C = 0; $-V_{CE}$ = 10 V	C_{re}	typ.	0,5 pF
Noise figure at optimum source impedance $-I_C$ = 2 mA; $-V_{CE}$ = 10 V; f = 500 MHz	F	typ.	2,7 dB
Maximum unilateral power gain $-I_C$ = 14 mA; $-V_{CE}$ = 10 V; f = 500 MHz	G_{UM}	typ.	17,0 dB

MECHANICAL DATA

Dimensions in mm

Fig. 1 TO-72 with insulated electrodes.

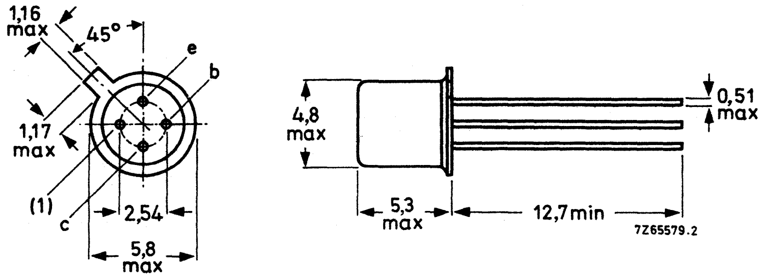

(1) shield lead connected to case.

Accessories: 56246 (distance disc).

RATINGS

Limiting values in accordance with the Absolute Maximum System (IEC 134)

Collector-base voltage (open emitter)	$-V_{CBO}$	max.	20	V
Collector-emitter voltage (open base)	$-V_{CEO}$	max.	15	V
Emitter-base voltage (open collector)	$-V_{EBO}$	max.	2	V
Collector current (d.c.)	$-I_C$	max.	25	mA
Collector current (peak value) at $f > 1$ MHz	$-I_{CM}$	max.	35	mA
Total power dissipation up to $T_{amb} = 65\ ^oC$	P_{tot}	max.	150	mW
Storage temperature	T_{stg}		−65 to +200	^oC
Junction temperature	T_j	max.	200	^oC

THERMAL RESISTANCE

From junction to ambient in free air	$R_{th\ j\text{-}a}$	=	900	K/W
From junction to case	$R_{th\ j\text{-}c}$	=	600	K/W

CHARACTERISTICS

$T_j = 25\ ^oC$ unless otherwise specified

Collector cut-off current				
$I_E = 0; -V_{CB} = 10$ V	$-I_{CBO}$	max.	50	nA
→ D.C. current gain				
$-I_C = 14$ mA; $-V_{CE} = 10$ V	h_{FE}	min.	20	
		typ.	50	
→ Transition frequency (note 1)				
$-I_C = 14$ mA; $-V_{CE} = 10$ V; f = 500 MHz	f_T	typ.	5,0	GHz
→ Collector capacitance (note 2)				
$I_E = I_e = 0; -V_{CB} = 10$ V; f = 1 MHz	C_c	typ.	0,85	pF
Emitter capacitance				
$I_C = I_c = 0; -V_{EB} = 0,5$ V; f = 1 MHz	C_e	typ.	1,2	pF
→ Feedback capacitance (note 1)				
$I_C = 0; -V_{CE} = 10$ V; f = 1 MHz	C_{re}	typ.	0,5	pF
Noise figure at optimum source impedance (note 1)				
$-I_C = 2$ mA; $-V_{CE} = 10$ V; f = 500 MHz; $T_{amb} = 25\ ^oC$	F	typ.	2,7	dB

Maximum unilateral power gain (note 1)
(s_{re} assumed to be zero)

$$G_{UM} = 10 \log \frac{|s_{fe}|^2}{(1 - |s_{ie}|^2)\ (1 - |s_{oe}|^2)}$$

$-I_C = 14$ mA; $-V_{CE} = 10$ V; f = 500 MHz; $T_{amb} = 25\ ^oC$	G_{UM}	typ.	17,0	dB

→ **Notes**

1. Shield lead grounded.
2. Shield lead not connected.

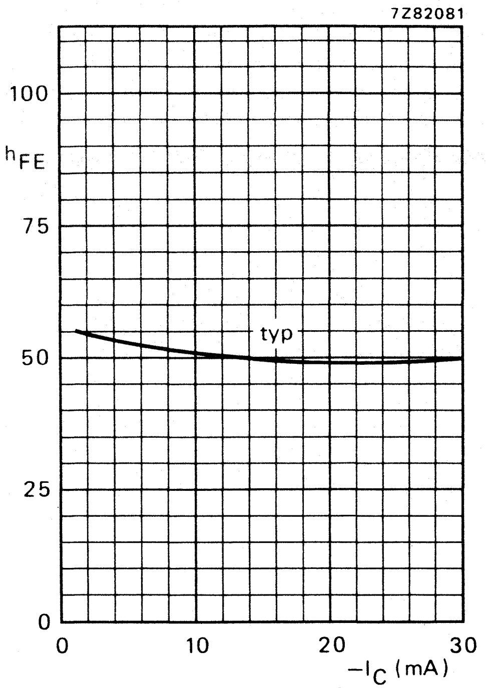

Fig. 2 $-V_{CE} = 10$ V; $T_j = 25$ °C; typ. values.

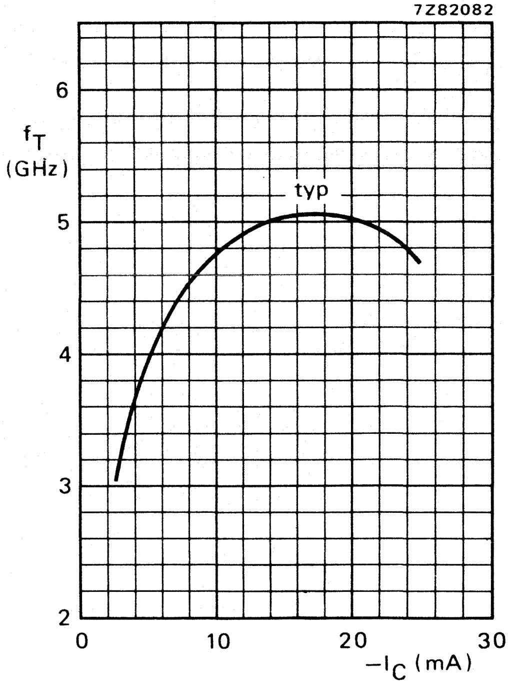

Fig. 3 $-V_{CE} = 10$ V; f = 500 MHz; $T_j = 25$ °C; typical values.

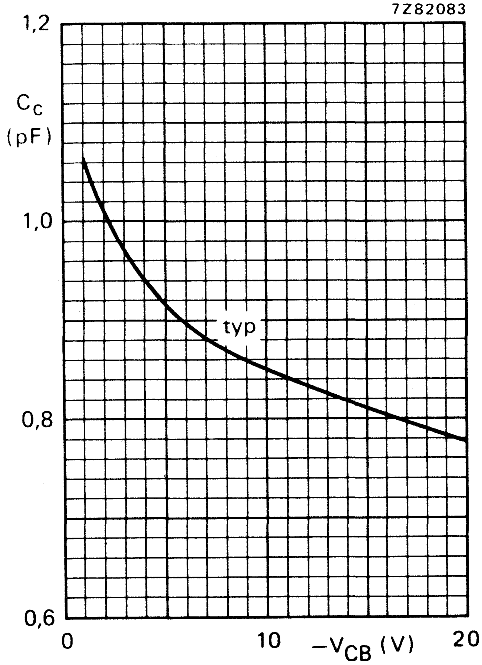

Fig. 4 $I_E = I_e = 0$; f = 1 MHz; $T_j = 25$ °C; typical values.

N-P-N H.F. WIDEBAND TRANSISTOR

N-P-N transistor in a TO-72 metal envelope with insulated electrodes and a shield lead connected to the case. It is primarily intended for use in u.h.f. and microwave amplifiers such as in aerial amplifiers, radar systems, oscilloscopes, spectrum analysers etc.

The transistor features extremely high power gain coupled with good low noise performance.

P-N-P complement is BFQ52.

QUICK REFERENCE DATA

Collector-base voltage (open emitter)	V_{CBO}	max.	20	V
Collector-emitter voltage (open base)	V_{CEO}	max.	15	V
Collector current (d.c.)	I_C	max.	25	mA
Total power dissipation up to T_{amb} = 65 °C	P_{tot}	max.	150	mW
Junction temperature	T_j	max.	200	°C
Transition frequency at f = 500 MHz I_C = 14 mA; V_{CE} = 10 V	f_T	typ.	5,0	GHz
Feedback capacitance at f = 1 MHz I_C = 0; V_{CE} = 10 V	C_{re}	typ.	0,45	pF
Noise figure at optimum source impedance I_C = 2 mA; V_{CE} = 10 V; f = 500 MHz	F	typ.	2,4	dB
Maximum unilateral power gain I_C = 14 mA; V_{CE} = 10 V; f = 500 MHz	G_{UM}	typ.	18,0	dB

MECHANICAL DATA

Dimensions in mm

Fig. 1 TO-72 with insulated electrodes.

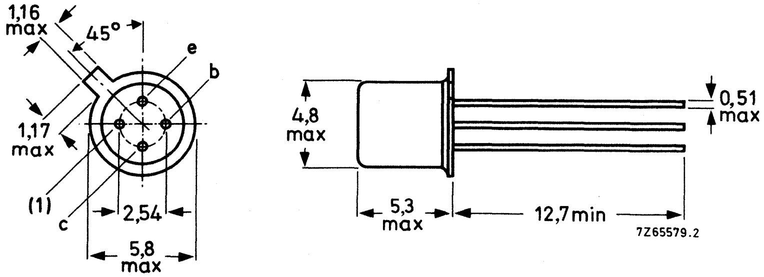

(1) shield lead connected to case.

Accessories: 56246 (distance disc).

RATINGS

Limiting values in accordance with the Absolute Maximum System (IEC 134)

Collector-base voltage (open emitter)	V_{CBO}	max.	20	V
Collector-emitter voltage (open base)	V_{CEO}	max.	15	V
Emitter-base voltage (open collector)	V_{EBO}	max.	2	V
Collector current (d.c.)	I_C	max.	25	mA
Collector current (peak value) at $f > 1$ MHz	I_{CM}	max.	35	mA
Total power dissipation up to $T_{amb} = 65$ °C	P_{tot}	max.	150	mW
Storage temperature	T_{stg}		−65 to +200	°C
Junction temperature	T_j	max.	200	°C

THERMAL RESISTANCE

From junction to ambient in free air	$R_{th\ j\text{-}a}$	=	900	K/W
From junction to case	$R_{th\ j\text{-}c}$	=	600	K/W

CHARACTERISTICS

$T_j = 25$ °C unless otherwise specified

Collector cut-off current $I_E = 0$; $V_{CB} = 10$ V	I_{CBO}	max.	50	nA
→ D.C. current gain $I_C = 14$ mA; $V_{CE} = 10$ V	h_{FE}	min. typ.	25 50	
→ Transition frequency (note 1) $I_C = 14$ mA; $V_{CE} = 10$ V; $f = 500$ MHz	f_T	typ.	5,0	GHz
Collector capacitance (note 2) $I_E = I_e = 0$; $V_{CB} = 10$ V; $f = 1$ MHz	C_c	typ.	0,75	pF
Emitter capacitance $I_C = I_c = 0$; $V_{EB} = 0{,}5$ V; $f = 1$ MHz	C_e	typ.	1,2	pF
Feedback capacitance (note 1) $I_C = 0$; $V_{CE} = 10$ V; $f = 1$ MHz	C_{re}	typ.	0,45	pF
Noise figure at optimum source impedance (note 1) $I_C = 2$ mA; $V_{CE} = 10$ V; $f = 500$ MHz; $T_{amb} = 25$ °C	F	typ.	2,4	dB

Maximum unilateral power gain (note 1)

s_{re} assumed to be zero

$$G_{UM} = \frac{|s_{fe}|^2}{(1 - |s_{ie}|^2)\,(1 - |s_{oe}|^2)}$$

$I_C = 14$ mA; $V_{CE} = 10$ V; $f = 500$ MHz; $T_{amb} = 25$ °C	G_{UM}	typ.	18,0	dB

→ Notes

1. Shield lead connected
2. Shield lead not connected.

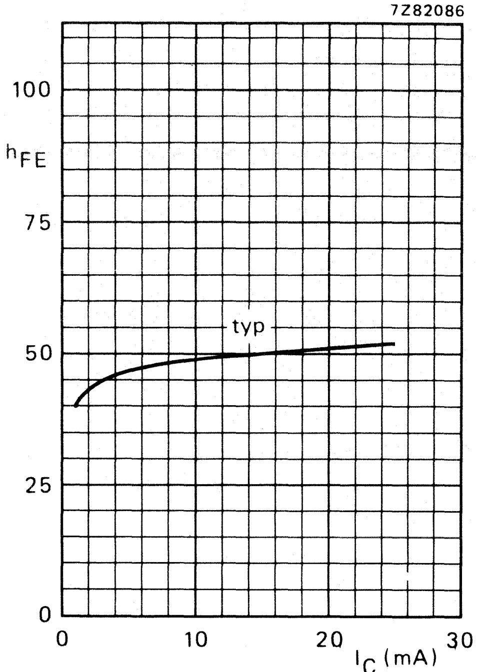

Fig. 2 V_{CE} = 10 V; T_j = 25 °C; typ. values.

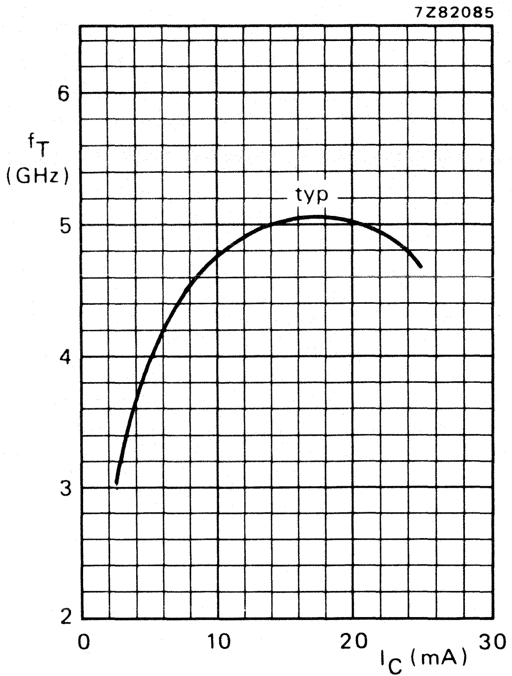

Fig. 3 V_{CE} = 10 V; f = 500 MHz; T_j = 25 °C; typical values.

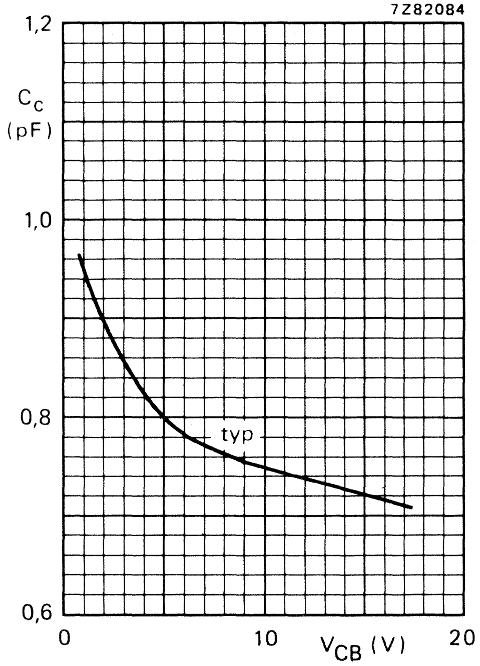

Fig. 4 I_E = I_e = 0; f = 1 MHz; T_j = 25 °C; typical values.

N-P-N H.F. WIDEBAND TRANSISTOR

N-P-N transistor in a TO-72 metal envelope with insulated electrodes and a shield lead connected to the case. It is primarily intended for use in u.h.f. and microwave amplifiers such as in aerial amplifiers, radar systems, oscilloscopes, spectrum analysers etc.

The transistor features the combination of high power gain, high transition frequency and low noise up to high frequencies.

P-N-P complement is BFQ32M.

QUICK REFERENCE DATA

Collector-base voltage (open emitter)	V_{CBO}	max.	20	V
Collector-emitter voltage (open base)	V_{CEO}	max.	15	V
Collector current (d.c.)	I_C	max.	75	mA
Total power dissipation up to $T_{amb} = 50\ ^oC$	P_{tot}	max.	250	mW
Junction temperature	T_j	max.	200	^oC
Transition frequency at f = 500 MHz $I_C = 50$ mA; $V_{CE} = 5$ V	f_T	typ.	4,5	GHz
Feedback capacitance at f = 1 MHz $I_C = 0$; $V_{CE} = 10$ V	C_{re}	typ.	1,0	pF
Noise figure at optimum source impedance $I_C = 10$ mA; $V_{CE} = 5$ V; f = 200 MHz	F	max.	3,0	dB
Maximum unilateral power gain $I_C = 20$ mA; $V_{CE} = 5$ V; f = 200 MHz	G_{UM}	min.	17,5	dB

MECHANICAL DATA

Dimensions in mm

Fig. 1 TO-72 with insulated electrodes.

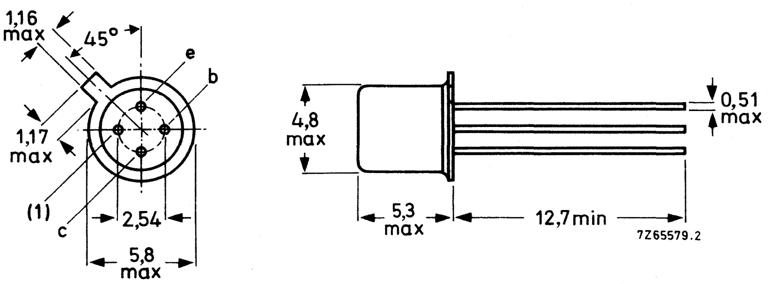

(1) shield lead connected to case.

Accessories: 56246 (distance disc).

RATINGS

Limiting values in accordance with the Absolute Maximum System (IEC 134)

Collector-base voltage (open emitter)	V_{CBO}	max.	20	V
Collector-emitter voltage (open base)	V_{CEO}	max.	15	V
Emitter-base voltage (open collector)	V_{EBO}	max.	3	V
Collector current (d.c.)	I_C	max.	75	mA
Collector current (peak value) at $f > 1$ MHz	I_{CM}	max.	150	mA
Total power dissipation up to $T_{amb} = 50\ ^oC$	P_{tot}	max.	250	mW
Storage temperature	T_{stg}		−65 to + 200	°C
Junction temperature	T_j	max.	200	°C

THERMAL RESISTANCE

From junction to ambient in free air	$R_{th\ j\text{-}a}$	=	600	K/W
From junction to case	$R_{th\ j\text{-}c}$	=	350	K/W

CHARACTERISTICS

$T_j = 25\ ^oC$ unless otherwise specified

Collector cut-off current $I_E = 0$; $V_{CB} = 10$ V	I_{CBO}	max.	100	nA
→ D.C. current gain $I_C = 20$ mA; $V_{CE} = 5$ V	h_{FE}	min. max.	50 150	
→ Transition frequency (note 1) $I_C = 50$ mA; $V_{CE} = 5$ V; $f = 500$ MHz	f_T	typ.	4,5	GHz
Collector capacitance (note 2) → $I_C = i_c = 0$; $V_{CB} = 5$ V; $f = 1$ MHz	C_c	typ.	1,3	pF
Feedback capacitance (note 2) → $I_C = 0$; $V_{CE} = 10$ V; $f = 1$ MHz	C_{re}	typ. max.	1,0 1,4	pF pF
Noise figure at optimum source impedance (note 1) $I_C = 10$ mA; $V_{CE} = 5$ V; $f = 200$ MHz; $T_{amb} = 25\ ^oC$	F	max.	3,0	dB
$I_C = 10$ mA; $V_{CE} = 5$ V; $f = 500$ MHz; $T_{amb} = 25\ ^oC$	F	typ.	2,3	dB

Maximum unilateral power gain (note 1)

s_{re} assumed to be zero

$$G_{UM} = 10 \log \frac{|s_{fe}|^2}{[1-|s_{ie}|^2]\,[1-|s_{oe}|^2]}$$

$I_C = 20$ mA; $V_{CE} = 5$ V; $f = 200$ MHz; $T_{amb} = 25\ ^oC$	G_{UM}	min.	17,5	dB
$I_C = 50$ mA; $V_{CE} = 5$ V; $f = 500$ MHz; $T_{amb} = 25\ ^oC$	G_{UM}	typ.	11,5	dB

→ Notes

1. Shield lead grounded.
2. Shield lead and emitter lead connected to bridge earth.

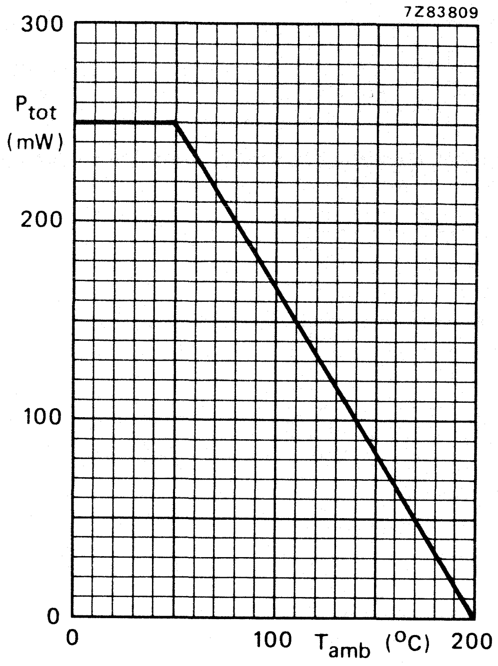

Fig. 2 Maximum permissible power dissipation in free air as a function of ambient temperature.

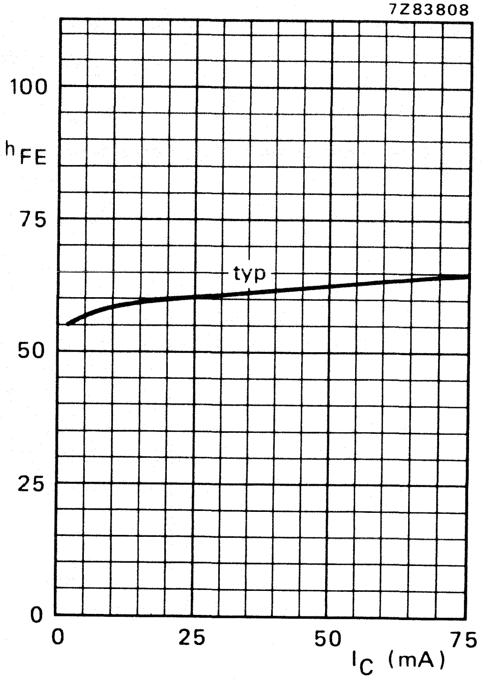

Fig. 3 V_{CE} = 5 V; T_j = 25 °C; typical values.

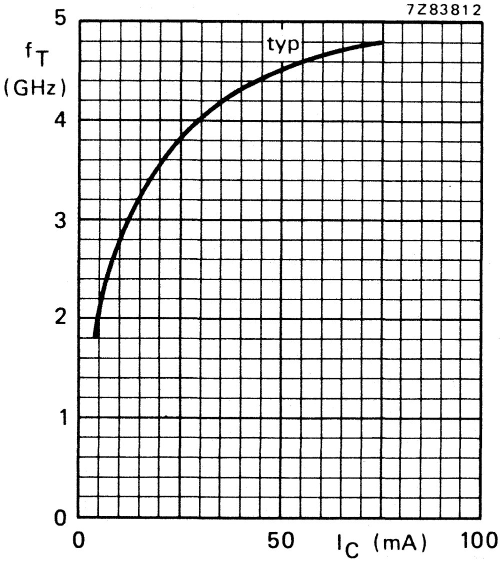

Fig. 4 V_{CE} = 5 V; f = 500 MHz; T_j = 25 °C; typical values.

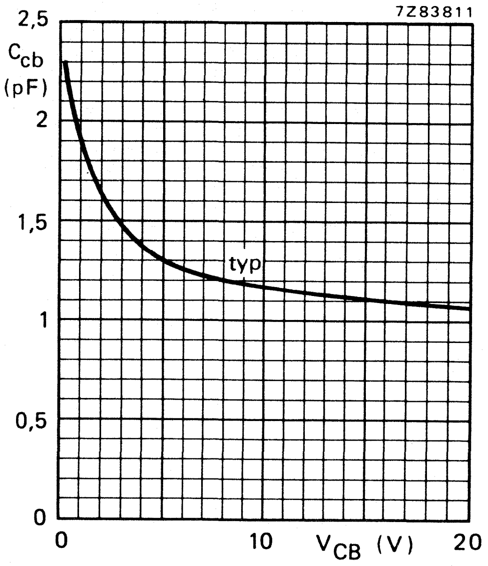

Fig. 5 $I_C = i_c = 0$; f = 1 MHz; T_j = 25 °C; typical values. ←

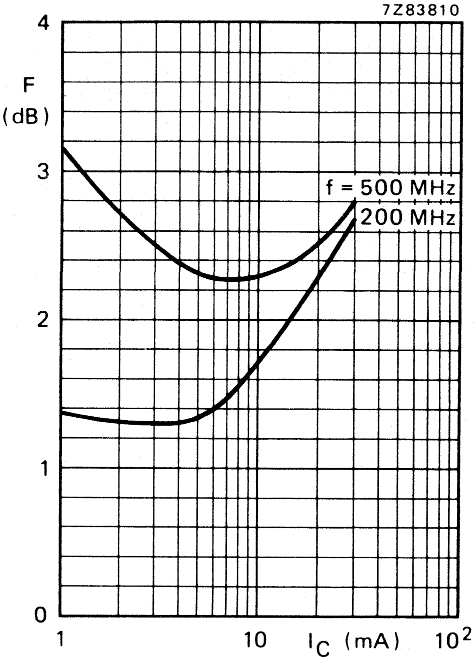

Fig. 6 V_{CE} = 5 V; Z_S = optimum; T_{amb} = 25 °C; typical values.

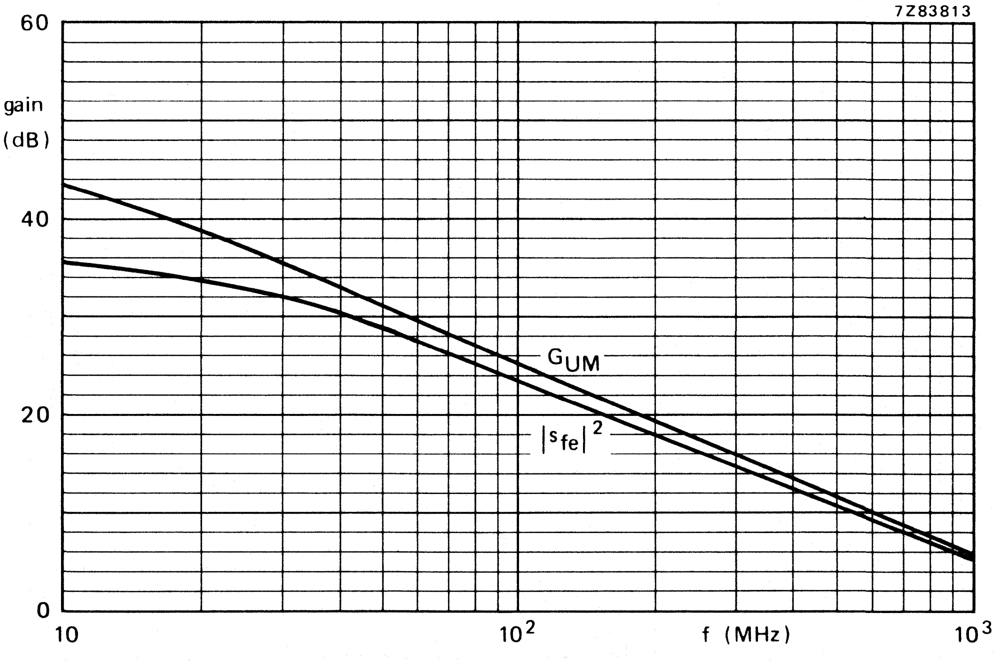

Fig. 7 V_{CE} = 5 V; I_C = 50 mA; T_{amb} = 25 °C; typical values.

N-P-N 2 GHz WIDEBAND TRANSISTOR

N-P-N transistor in a four-lead dual-emitter plastic envelope (SOT-103). It is designed for wideband application in the GHz range, such as satellite TV systems (SATV) and repeater amplifiers in fibre-optical systems. The device features a very high transition frequency and a very low noise figure up to high frequencies.

QUICK REFERENCE DATA

Collector-base voltage	V_{CBO}	max.	20	V
Collector-emitter voltage	V_{CEO}	max.	10	V
Collector current (d.c.)	I_C	max.	50	mA
Total power dissipation up to T_{amb} = 60 °C	P_{tot}	max.	300	mW
Junction temperature	T_j	max.	150	°C
D.C. current gain I_C = 15 mA; V_{CE} = 5 V	h_{FE}	min. typ.	60 100	
Transition frequency at f = 500 MHz I_C = 15 mA; V_{CE} = 8 V	f_T	typ.	7,5	GHz
Maximum unilateral power gain at f = 2 GHz I_C = 15 mA; V_{CE} = 8 V	G_{UM}	typ.	8,0	dB
Noise figure at f = 2 GHz I_C = 15 mA; V_{CE} = 8 V; Z_s = 60 Ω	F	typ.	3,0	dB

MECHANICAL DATA

Dimensions in mm

Fig. 1 SOT-37.

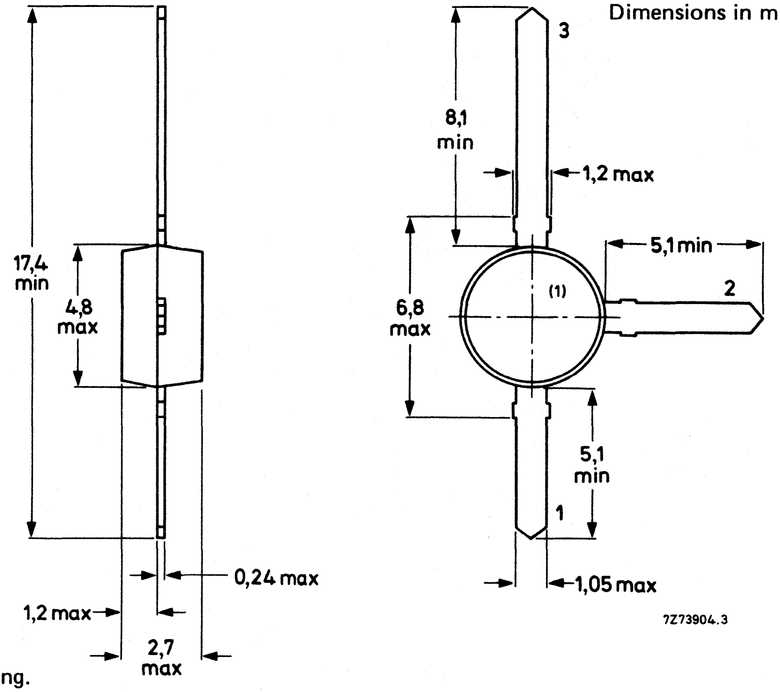

Connections:

1. Base
2. Emitter
3. Collector

(1) Type number marking.

RATINGS

Limiting values in accordance with the Absolute Maximum System (IEC 134)

Collector-base voltage (open emitter)	V_{CBO}	max.	20 V
Collector-emitter voltage (open base)	V_{CEO}	max.	10 V
Emitter-base voltage (open collector)	V_{EBO}	max.	2,5 V
Collector current (d.c.)	I_C	max.	50 mA
Total power dissipation up to T_{amb} = 60 °C mounted on a fibre-glass print of 40 mm x 25 mm x 1 mm	P_{tot}	max.	300 mW
Storage temperature	T_{stg}		−65 to +150 °C
Junction temperature	T_j	max.	150 °C

THERMAL RESISTANCE

From junction to ambient in free air mounted on a fibre-glass print of 40 mm x 25 mm x 1 mm	$R_{th\ j\text{-}a}$		300 K/W

CHARACTERISTICS

T_j = 25 °C unless otherwise specified

Collector cut-off current $I_E = 0$; V_{CB} = 10 V	I_{CBO}	max.	50 nA
D.C. current gain I_C = 15 mA; V_{CE} = 5 V	h_{FE}	min. typ.	60 100
Transition frequency at f = 500 MHz I_C = 15 mA; V_{CE} = 8 V	f_T	typ.	7,5 GHz
Collector capacitance at f = 1 MHz $I_E = i_e = 0$; V_{CB} = 8 V	C_c	typ.	0,8 pF
Emitter capacitance at f = 1 MHz $I_C = i_c = 0$; V_{EB} = 0,5 V	C_e	typ.	1,3 pF
Feedback capacitance $I_C = 0$; V_{CE} = 8 V	C_{re}	typ.	0,5 pF

→ Maximum unilateral power gain (s_{re} assumed to be zero)

$$G_{UM} = 10 \log \frac{|s_{fe}|^2}{[1-|s_{ie}|^2]\,[1-|s_{oe}|^2]}$$

I_C = 15 mA; V_{CE} = 8 V; f = 800 MHz; T_{amb} = 25 °C	G_{UM}	typ.	16,0 dB
I_C = 15 mA; V_{CE} = 8 V; f = 2 GHz; T_{amb} = 25 °C	G_{UM}	typ.	8,0 dB

→ Noise figure at f = 800 MHz; Z_s = opt.; T_{amb} = 25 °C

I_C = 5 mA; V_{CE} = 8 V	F	typ.	0,8 dB
I_C = 15 mA; V_{CE} = 8 V	F	typ.	1,5 dB

→ Noise figure at f = 2 GHz; Z_S = 60 Ω; T_{amb} = 25 °C

I_C = 5 mA; V_{CE} = 8 V	F	typ.	2,5 dB
I_C = 15 mA; V_{CE} = 8 V	F	typ.	3,0 dB

s-parameters (common emitter) at V_{CE} = 8 V; T_{amb} = 25 °C; typical values

I_C mA	f MHz	s_{ie}	s_{fe}	s_{re}	s_{oe}	GUM dB
5	40	0,87/ −12,9°	15,83/171,2°	0,01/82,0°	0,98/ −6,5°	45,3
	100	0,81/ −31,0°	14,92/155,8°	0,02/74,8°	0,93/−15,7°	37,1
	200	0,69/ −54,6°	12,40/138,3°	0,04/67,0°	0,83/−25,9°	29,8
	500	0,42/−105,7°	7,12/104,9°	0,07/59,1°	0,59/−40,4°	19,7
	800	0,34/−128,7°	4,89/ 91,3°	0,10/63,0°	0,58/−49,1°	16,1
	1000	0,35/−142,8°	4,13/ 83,2°	0,12/63,7°	0,58/−58,0°	14,6
	2000	0,25/+128,0°	2,08/ 56,8°	0,20/67,8°	0,38/−63,3°	7,3
10	40	0,75/ −19,1°	26,88/165,6°	0,01/80,0°	0,96/−10,2°	43,8
	100	0,65/ −43,3°	23,08/144,9°	0,02/71,7°	0,86/−22,1°	35,5
	200	0,49/ −70,7°	16,71/125,2°	0,03/66,4°	0,70/−31,6°	28,6
	500	0,28/−126,5°	8,21/ 96,9°	0,06/66,4°	0,48/−40,0°	19,8
	800	0,24/−136,7°	5,39/ 86,8°	0,10/70,8°	0,50/−48,9°	16,1
	1000	0,26/−147,8°	4,49/ 79,9°	0,12/70,5°	0,51/−58,9°	14,6
	2000	0,22/+114,8°	2,28/ 56,5°	0,21/68,8°	0,32/−61,8°	7,8
15	40	0,67/ −23,8°	34,23/161,4°	0,01/78,3°	0,94/−12,6°	42,9
	100	0,54/ −51,8°	27,41/138,1°	0,02/71,0°	0,80/−25,5°	34,7
	200	0,39/ −80,0°	18,52/118,7°	0,03/68,4°	0,63/−33,2°	28,2
	500	0,22/−130,3°	8,47/ 93,5°	0,06/70,2°	0,44/−38,8°	19,7
	800	0,20/−140,8°	5,57/ 84,9°	0,10/73,6°	0,47/−48,4°	16,0
	1000	0,22/+147,5°	4,64/ 78,4°	0,12/72,9°	0,48/−59,0°	14,7
	2000	0,21/+109,8°	2,34/ 56,2°	0,22/68,7°	0,31/−61,0°	8,0
20	40	0,61/ −27,4°	39,76/158,4°	0,01/76,8°	0,92/−14,2°	42,4
	100	0,47/ −58,0°	30,05/133,7°	0,02/70,4°	0,75/−27,5°	34,2
	200	0,32/ −86,2°	19,38/114,7°	0,03/70,4°	0,58/−33,5°	28,0
	500	0,19/−136,8°	8,65/ 92,0°	0,06/72,4°	0,41/−37,5°	19,7
	800	0,18/−145,1°	5,62/ 83,5°	0,10/75,3°	0,46/−47,9°	16,1
	1000	0,20/−151,9°	4,63/ 77,7°	0,12/74,1°	0,47/−58,8°	14,6
	2000	0,21/−107,3°	2,37/ 55,7°	0,22/69,0°	0,30/−60,6°	8,1
30	40	0,51/ −33,2°	46,18/154,6°	0,01/75,6°	0,89/−16,4°	41,4
	100	0,37/ −67,3°	32,56/128,1°	0,02/70,6°	0,69/−29,1°	33,7
	200	0,26/ −97,3°	20,04/110,7°	0,03/72,3°	0,53/−32,7°	27,8
	500	0,17/−151,6°	8,64/ 89,7°	0,06/74,6°	0,39/−35,6°	19,6
	800	0,16/−152,2°	5,61/ 82,1°	0,10/76,7°	0,44/−46,9°	16,0
	1000	0,19/−157,7°	4,62/ 76,4°	0,12/75,1°	0,46/−58,3°	14,5
	2000	0,22/+106,4°	2,37/ 55,0°	0,23/69,3°	0,29/−60,0°	8,1

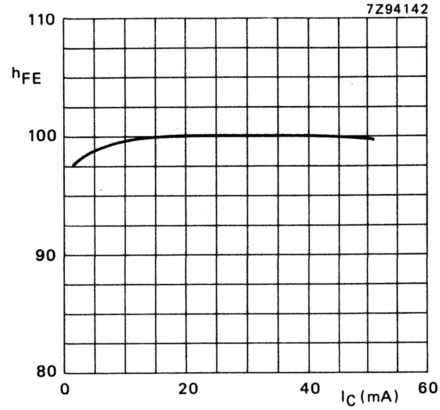

Fig. 2 V_{CE} = 8 V; T_j = 25 °C; typical values.

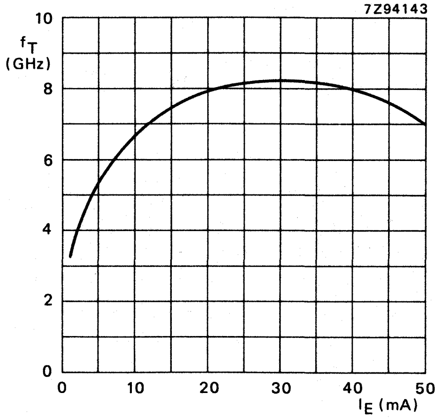

Fig. 3 V_{CE} = 8 V; T_j = 25 °C; typical values.

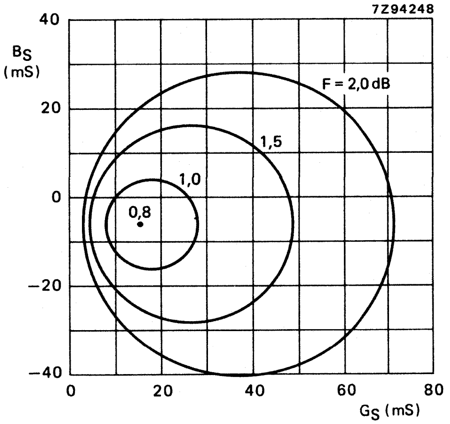

Fig. 4 Circles of constant noise figure;
V_{CE} = 8 V; I_C = 5 mA; f = 800 MHz; typical values.

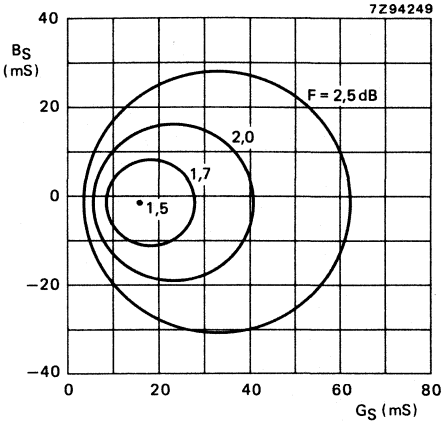

Fig. 5 Circles of constant noise figure;
V_{CE} = 8 V; I_C = 15 mA; f = 800 MHz; typ. values.

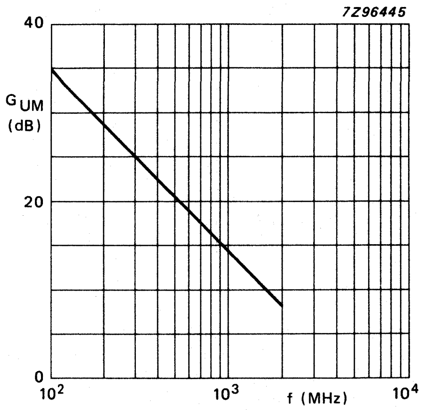

Fig. 6 V_{CE} = 8 V; I_C = 15 mA; T_{amb} = 25 °C; typical values.

N-P-N 2 GHz WIDEBAND TRANSISTOR

Small-signal planar epitaxial n-p-n transistor in HERMETICALLY SEALED microstripline envelope. It is designed for wideband application in the GHz range, such as satellite TV systems (SATV) and repeater amplifiers in fibre-optical systems. The device features a very high transition frequency and a very low noise figure up to high frequencies

QUICK REFERENCE DATA

Collector-base voltage	V_{CBO}	max.	20	V
Collector-emitter voltage	V_{CEO}	max.	10	V
Collector current (d.c.)	I_C	max.	50	mA
Total power dissipation up to $T_{amb} = 105\ ^oC$	P_{tot}	max.	350	mW
Junction temperature	T_j	max.	175	^oC
D.C. current gain $I_C = 15$ mA; $V_{CE} = 5$ V	h_{FE}	min. typ.	60 100	
Transition frequency at f = 500 MHz $I_C = 15$ mA; $V_{CE} = 8$ V	f_T	typ.	7,5	GHz
Maximum unilateral power gain at f = 2 GHz $I_C = 15$ mA; $V_{CE} = 8$ V	G_{UM}	typ.	11,5	dB

MECHANICAL DATA

Dimensions in mm

Fig. 1 SOT-173.

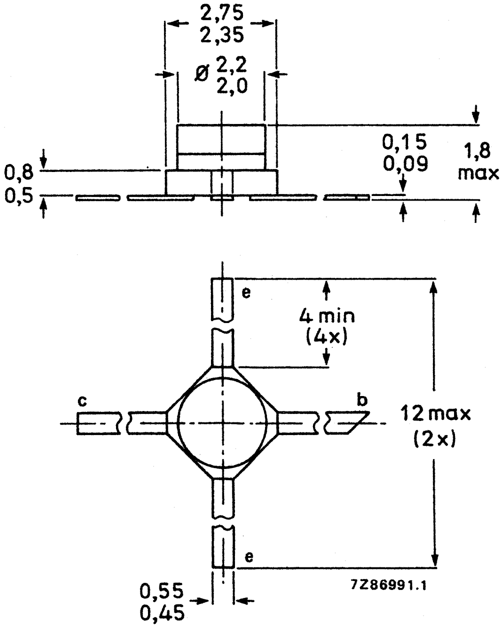

Marking code: Q6

RATINGS

Limiting values in accordance with the Absolute Maximum System (IEC 134)

Collector-base voltage (open emitter)	V_{CBO}	max.	20	V
Collector-emitter voltage (open base)	V_{CEO}	max.	10	V
Emitter-base voltage (open collector)	V_{EBO}	max.	2,5	V
Collector current (d.c.)	I_C	max.	50	mA
Total power dissipation up to T_{amb} = 105 °C mounted on a ceramic substrate of 0,7 mm x 10 cm^2	P_{tot}	max.	350	mW
Storage temperature	T_{stg}	−65 to + 150		°C
Junction temperature	T_j	max.	175	°C

THERMAL RESISTANCE

From junction to ambient in free air mounted on a ceramic substrate of 0,7 mm x 10 cm^2	$R_{th\ j\text{-}a}$		200	K/W

CHARACTERISTICS

T_j = 25 °C unless otherwise specified

Collector cut-off current $I_E = 0$; $V_{CB} = 5$ V	I_{CBO}	max.	50	nA
→ D.C. current gain $I_C = 15$ mA; $V_{CE} = 5$ V	h_{FE}	min. typ.	60 100	
→ Transition frequency at f = 500 MHz $I_C = 15$ mA; $V_{CE} = 8$ V	f_T	typ.	7,5	GHz
Collector capacitance at f = 1 MHz $I_E = i_e = 0$; $V_{CB} = 8$ V	C_c	typ.	0,7	pF
Emitter capacitance at f = 1 MHz $I_C = i_c = 0$; $V_{EB} = 0{,}5$ V	C_e	typ.	1,3	pF
Feedback capacitance $I_C = 0$; $V_{CE} = 8$ V	C_{re}	typ.	0,4	pF

Maximum unilateral power gain (s_{re} assumed to be zero)

$$G_{UM} = 10 \log \frac{|s_{fe}|^2}{(1 - |s_{ie}|^2)\ (1 - |s_{oe}|^2)}$$

$I_C = 15$ mA; $V_{CE} = 8$ V; f = 2 GHz; $T_{amb} = 25$ °C	G_{UM}	typ.	11,5	dB
→ Noise figure at f = 2 GHz; $Z_S = 60\ \Omega$; $T_{amb} = 25$ °C $I_C = 5$ mA; $V_{CE} = 8$ V	F	typ.	2,5	dB
$I_C = 15$ mA; $V_{CE} = 8$ V	F	typ. max.	3,0 4,0	dB dB

s-parameters (common emitter) at V_{CE} = 8 V; T_{amb} = 25 °C; typical values.

I_C mA	f MHz	s_{ie}	s_{fe}	s_{re}	s_{oe}	G_{UM} dB
5	100	0,86/ −30,0°	15,8/160,5°	0,024/74,1°	0,97/ −16,1°	42,1
	200	0,79/ −56,5°	14,0/143,8°	0,043/62,5°	0,87/ −28,2°	33,3
	300	0,73/ −77,9°	11,8/130,6°	0,056/53,6°	0,76/ −37,0°	28,5
	400	0,68/ −95,3°	10,1/121,2°	0,064/48,0°	0,67/ −43,6°	25,4
	500	0,66/−108,1°	8,7/114,1°	0,070/44,8°	0,62/ −48,0°	23,4
	600	0,63/−119,0°	7,7/107,9°	0,074/42,7°	0,57/ −50,6°	21,6
	700	0,62/−127,8°	6,7/103,2°	0,079/41,6°	0,53/ −52,6°	20,1
	800	0,59/−135,8°	6,1/ 99,2°	0,081/40,8°	0,50/ −54,8°	18,8
	900	0,58/−141,0°	5,5/ 95,5°	0,084/40,8°	0,49/ −55,5°	17,8
	1000	0,57/−147,4°	5,0/ 92,0°	0,087/40,7°	0,46/ −56,5°	16,7
	1200	0,56/−157,0°	4,2/ 85,9°	0,092/41,2°	0,44/ −59,5°	15,0
	1500	0,53/−168,7°	3,4/ 77,5°	0,092/37,7°	0,44/ −60,6°	13,0
	2000	0,54/+171,9°	2,6/ 65,8°	0,103/40,6°	0,41/ −66,5°	10,6
	2500	0,54/+158,8°	2,2/ 57,8°	0,114/44,6°	0,39/ −75,2°	9,1
	3000	0,53/+144,8°	1,8/ 49,2°	0,129/48,1°	0,39/ −83,1°	7,3
	3500	0,55/+134,0°	1,6/ 41,9°	0,148/50,4°	0,37/ −96,2°	6,3
	4000	0,54/+120,2°	1,5/ 32,1°	0,170/49,9°	0,37/−109,0°	5,7

I_C mA	f MHz	s_{ie}	s_{fe}	s_{re}	s_{oe}	G_{UM} dB
15	100	0,68/ −54,8°	31,3/147,5°	0,020/65,8°	0,86/ −28,0°	38,4
	200	0,61/ −92,4°	23,3/126,6°	0,031/54,6°	0,67/ −43,8°	32,0
	300	0,57/−115,8°	17,5/114,4°	0,038/49,8°	0,52/ −51,5°	27,9
	400	0,55/−131,0°	13,9/106,8°	0,042/48,7°	0,44/ −56,5°	25,4
	500	0,55/−141,0°	11,5/101,6°	0,046/49,3°	0,40/ −59,3°	23,5
	600	0,53/−149,3°	9,8/ 96,7°	0,051/50,4°	0,36/ −60,2°	21,9
	700	0,54/−155,5°	8,5/ 93,3°	0,055/51,6°	0,34/ −61,2°	20,6
	800	0,54/−160,6°	7,5/ 90,4°	0,058/52,9°	0,32/ −62,4°	19,5
	900	0,52/−164,6°	6,7/ 87,8°	0,063/54,1°	0,31/ −62,3°	18,3
	1000	0,52/−169,1°	6,1/ 85,4°	0,067/55,1°	0,30/ −62,6°	17,5
	1200	0,51/−176,1°	5,1/ 80,3°	0,075/56,5°	0,28/ −64,7°	15,8
	1500	0,50/+171,5°	4,2/ 73,5°	0,081/55,8°	0,28/ −66,6°	14,1
	2000	0,52/+157,8°	3,2/ 63,8°	0,100/57,3°	0,26/ −68,2°	11,5
	2500	0,52/+148,1°	2,6/ 57,2°	0,120/58,6°	0,25/ −75,5°	9,9
	3000	0,51/+135,6°	2,2/ 49,1°	0,143/58,2°	0,25/ −81,8°	8,4
	3500	0,54/+127,6°	2,0/ 42,1°	0,167/57,5°	0,24/ −96,0°	7,8
	4000	0,52/+114,6°	1,8/ 33,4°	0,191/54,3°	0,24/−110,9°	6,7

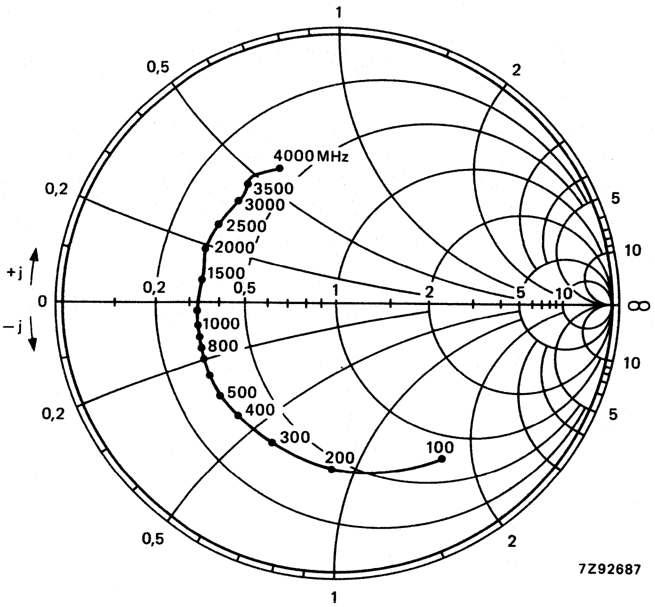

Fig. 2 Input impedance, derived from input reflection coefficient s_{ie} coordinates, in ohm x 50.

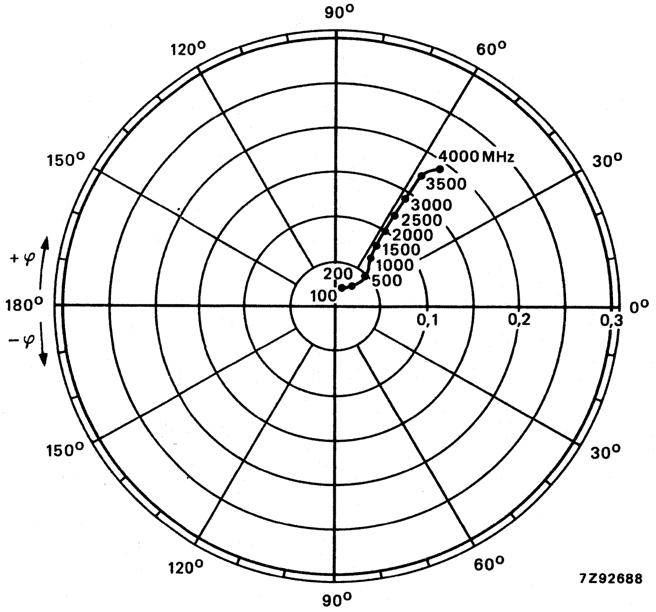

Fig. 3 Reverse transmission coefficient s_{re}.

→ Conditions for Figs 2 to 5: V_{CE} = 8 V; I_C = 15 mA; T_{amb} = 25 °C; typical values.

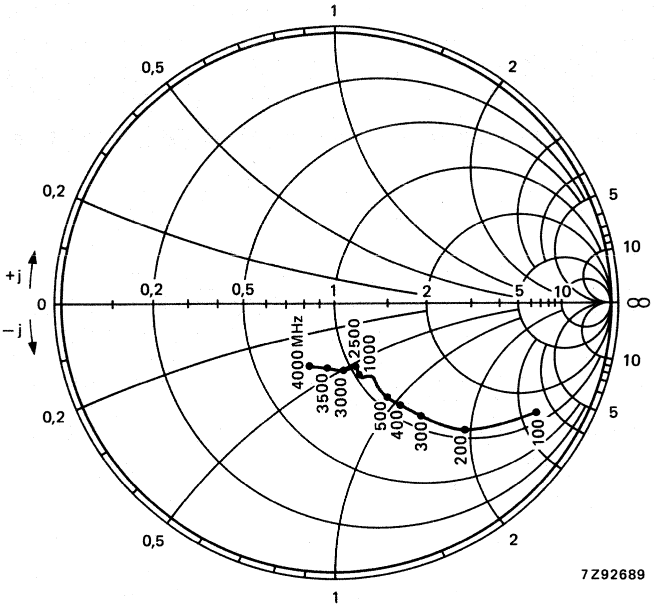

Fig. 4 Output impedance, derived from output reflection coefficient s_{oe} coordinates, in ohm x 50.

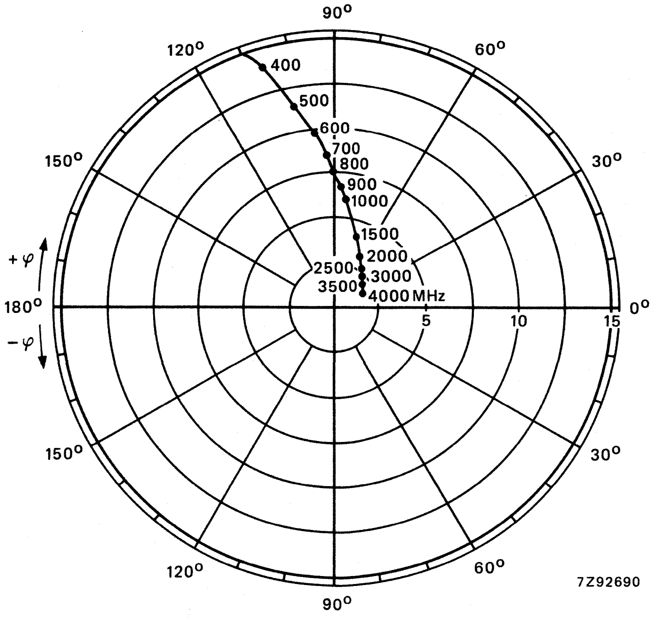

Fig. 5 Forward transmission coefficient s_{fe}.

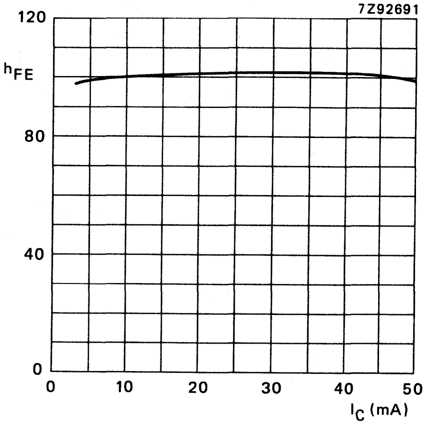

Fig. 6 V_{CE} = 5 V; T_j = 25 °C; typ. values.

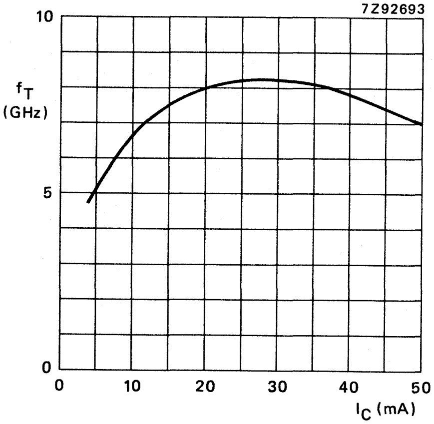

Fig. 7 V_{CE} = 8 V; f = 500 MHz; T_j = 25 °C; typ. values.

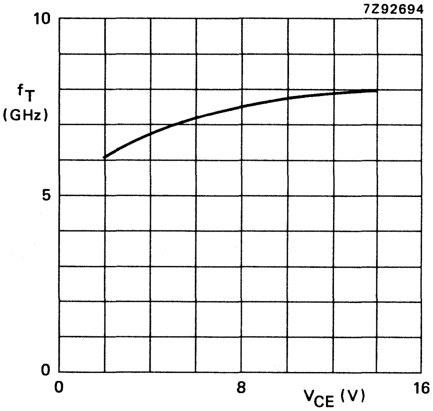

Fig. 8 I_C = 15 mA; f = 500 MHz; T_j = 25 °C; typ. values.

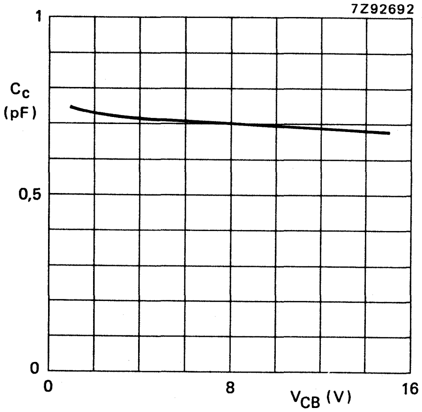

Fig. 9 I_E = i_e = 0; f = 1 MHz; T_j = 25 °C; typ. values.

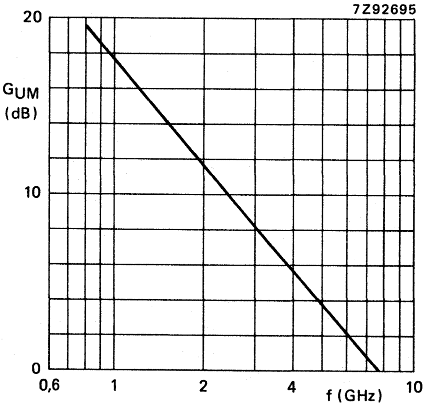

→

Fig. 10 V_{CE} = 8 V; I_C = 15 mA; T_{amb} = 25 °C; typ. values.

N-P-N 2 GHz WIDEBAND TRANSISTOR

N-P-N transistor in a plastic SOT-23 envelope. It is designed for wideband application in the GHz range, such as satellite TV systems (SATV) and repeater amplifiers in fibre-optical systems. The device features a very high transition frequency and a very low noise figure up to high frequencies.

QUICK REFERENCE DATA

Collector-base voltage, open emitter	V_{CBO}	max.	20 V
Collector-emitter voltage, open base	V_{CEO}	max.	10 V
Collector current (d.c.)	I_C	max.	50 mA
Total power dissipation up to T_{amb} = 70 °C	P_{tot}	max.	180 mW
Junction temperature	T_j	max.	150 °C
D.C. current gain I_C = 15 mA; V_{CB} = 5 V	h_{FE}	typ.	100
Transition frequency at f = 500 MHz I_C = 15 mA; V_{CE} = 8 V	f_T	typ.	7,5 GHz
Maximum unilateral power gain at f = 2 GHz I_C = 15 mA; V_{CE} = 8 V	G_{UM}	typ.	8,0 dB

MECHANICAL DATA

Dimensions in mm

Fig. 1 SOT-23.

Mark : V2

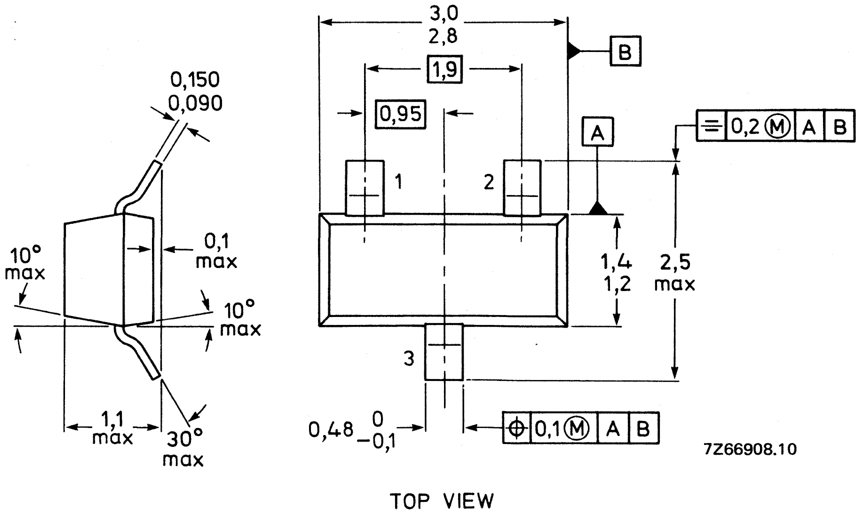

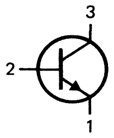

If required, the R-version (reverse pinning) is available on request.

RATINGS

Limiting values in accordance with the Absolute Maximum System (IEC 134)

Collector-base voltage (open emitter)	V_{CBO}	max.	20 V
Collector-emitter voltage (open base)	V_{CEO}	max.	10 V
Emitter-base voltage (open collector)	V_{EBO}	max.	2,5 V
Collector current (d.c.)	I_C	max.	50 mA
Total power dissipation up to T_{amb} = 70 °C*	P_{tot}	max.	180 mW
Storage temperature	T_{stg}	−65 to + 150 °C	
Junction temperature	T_j	max.	150 °C

THERMAL RESISTANCE

From junction to ambient in free air*	$R_{th\,j\text{-}a}$	=	430 K/W

CHARACTERISTICS

T_j = 25 °C unless otherwise specified

Collector cut-off current $I_E = 0$; $V_{CB} = 5$ V	I_{CBO}	max.	50 nA
D.C. current gain $I_C = 15$ mA; $V_{CB} = 5$ V	h_{FE}	typ.	100
Transition frequency at f = 500 mHz $I_C = 15$ mA; $V_{CE} = 8$ V	f_T	typ.	7,5 GHz
Collector capacitance at f = 1 MHz $I_E = i_e = 0$; $V_{CB} = 8$ V	C_c	typ.	0,7 pF
Emitter capacitance at f = 1 MHz $I_C = i_c = 0$; $V_{EB} = 0{,}5$ V	C_e	typ.	1,3 pF
→ Feedback capacitance at f = 1 MHz $I_C = 0$; $V_{CE} = 8$ V	C_{re}	typ.	0,5 pF

Maximum unilateral power gain (s_{re} assumed to be zero)

$$G_{UM} = 10 \log \frac{|s_{fe}|^2}{[1-|s_{ie}|^2]\,[1-|s_{oe}|^2]}$$

$I_C = 15$ mA; $V_{CE} = 8$ V; f = 2 GHz; $T_{amb} = 25$ °C	G_{UM}	typ.	8,0 dB

Noise figure at f = 2 GHz; $R_S = 60\ \Omega$; $T_{amb} = 25$ °C

$I_C = 5$ mA; $V_{CE} = 8$ V	F	typ.	2,5 dB
$I_C = 15$ mA; $V_{CE} = 8$ V	F	typ.	3,0 dB

---

* Mounted on a ceramic substrate of 8 mm x 10 mm x 0,7 mm.

s-parameters (common emitter) at V_{CE} = 8 V; typical values. ←

I_C mA	f MHz	s_{ie}	s_{fe}	s_{re}	s_{oe}	G_{UM} dB
2	40	0,93/ −9,5°	7,07/174,6°	0,01/83,2°	1,00/ −4,5°	46,7
	100	0,90/ −22,8°	6,96/163,5°	0,03/76,3°	0,97/−10,4°	36,4
	200	0,84/ −42,1°	6,35/150,4°	0,06/66,4°	0,91/−17,9°	29,2
	500	0,61/ −90,7°	4,40/117,2°	0,10/45,7°	0,67/−32,6°	17,5
	800	0,55/−118,0°	3,24/102,6°	0,12/42,2°	0,60/−38,2°	13,7
	1000	0,54/−135,5°	2,70/ 93,5°	0,12/41,2°	0,55/−43,6°	11,9
	2000	0,47/ 177,3°	1,57/ 64,5°	0,15/60,0°	0,47/−65,3°	6,1
5	40	0,84/ −14,9°	15,47/170,5°	0,01/80,7°	0,99/ −7,9°	44,5
	100	0,78/ −36,1°	14,35/154,8°	0,03/71,1°	0,92/−18,0°	35,4
	200	0,68/ −63,3°	11,97/137,7°	0,05/60,6°	0,79/−29,0°	28,5
	500	0,45/−119,8°	6,74/106,1°	0,08/49,7°	0,47/−40,1°	18,6
	800	0,42/−143,5°	4,55/ 94,7°	0,09/53,8°	0,41/−41,5°	14,8
	1000	0,43/−155,4°	3,80/ 87,4°	0,10/56,1°	0,37/−46,7°	13,1
	2000	0,35/ 169,2°	2,04/ 63,5°	0,18/69,4°	0,34/−63,3°	7,3
10	40	0,74/ −22,8°	25,66/165,6°	0,01/77,5°	0,96/−12,1°	43,0
	100	0,65/ −51,2°	22,19/145,5°	0,03/66,8°	0,84/−26,3°	34,6
	200	0,53/ −85,2°	16,35/126,4°	0,04/58,1°	0,64/−38,4°	28,0
	500	0,38/−144,4°	8,01/ 99,5°	0,06/58,0°	0,33/−42,8°	19,2
	800	0,36/−161,9°	5,29/ 90,0°	0,09/64,0°	0,30/−41,2°	15,5
	1000	0,38/ 169,9°	4,27/ 84,0°	0,10/66,0°	0,27/−47,0°	13,6
	2000	0,30/ 160,0°	2,29/ 62,8°	0,20/72,6°	0,27/−61,2°	7,9
15	40	0,67/ −28,3°	32,67/162,1°	0,01/75,8°	0,94/−14,9°	42,5
	100	0,57/ −62,8°	26,66/139,6°	0,02/64,6°	0,78/−31,4°	34,2
	200	0,46/ −99,5°	18,35/120,6°	0,04/58,7°	0,56/−42,8°	27,9
	500	0,36/−154,8°	8,49/ 96,8°	0,06/62,9°	0,27/−42,8°	19,5
	800	0,34/ 169,3°	5,55/ 88,4°	0,09/68,4°	0,26/−39,7°	15,7
	1000	0,36/ 176,8°	4,47/ 82,5°	0,10/69,7°	0,23/−46,3°	13,9
	2000	0,29/ 155,7°	2,37/ 62,3°	0,21/73,4°	0,25/−59,8°	8,2
20	40	0,63/ −32,5°	37,50/159,4°	0,01/74,2°	0,93/−17,2°	42,0
	100	0,52/ −70,8°	29,23/135,5°	0,02/63,4°	0,73/−34,7°	34,0
	200	0,42/−108,8°	19,22/117,4°	0,03/59,7°	0,50/−45,0°	27,8
	500	0,35/−162,0°	8,69/ 95,0°	0,06/64,9°	0,23/−41,6°	19,6
	800	0,33/−175,1°	5,62/ 86,9°	0,09/70,7°	0,24/−38,1°	15,7
	1000	0,36/−178,7°	4,57/ 81,7°	0,10/71,6°	0,21/−45,0°	14,0
	2000	0,28/−153,5°	2,40/ 62,0°	0,21/73,8°	0,24/−58,9°	8,2

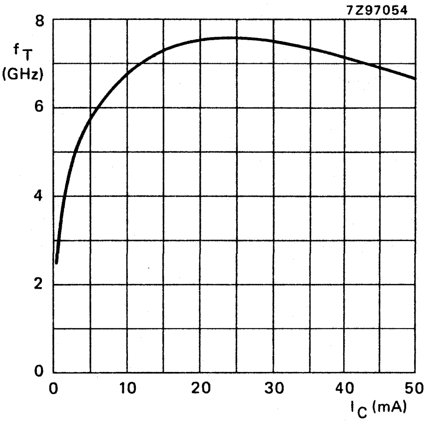

→ Fig. 2 V_{CE} = 8 V; f = 500 MHz; typical values.

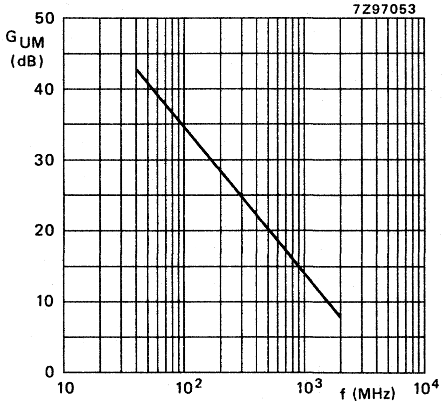

Fig. 3 V_{CE} = 8 V; I_C = 15 mA;
T_{amb} = 25 °C; typical values.

N-P-N 1 GHz WIDEBAND TRANSISTOR

N-P-N transistor primarily intended for final stages in MATV system amplifiers. This device is also suitable for use in low power band IV and V equipment. Diffused emitter ballasting resistors and the application of gold sandwich metallization ensure an optimum temperature profile and excellent reliability properties. The device features very high output voltage capabilities.

The transistor has a ¼″ capstan envelope with ceramic cap. All leads are isolated from the stud.

QUICK REFERENCE DATA

Collector-base voltage (open emitter)	V_{CBO}	max.	25	V
Collector-emitter voltage (open base)	V_{CEO}	max.	18	V
Collector current (d.c.)	I_C	max.	300	mA
Total power dissipation up to T_{mb} = 110 °C	P_{tot}	max.	4,5	W
Operating junction temperature	T_j	max.	200	°C
Transition frequency at f = 500 MHz I_C = 240 mA; V_{CE} = 15 V	f_T	typ.	4,0	GHz
Output voltage at d_{im} = –60 dB I_C = 240 mA; V_{CE} = 15 V; R_L = 75 Ω $f_{(p+q-r)}$ = 793,25 MHz	V_o	typ.	1,6	V
Output power at 1 dB gain compression	P_{L1}	typ.	+28	dBm
Third order intercept point	ITO	typ.	+47	dBm

MECHANICAL DATA

SOT-122 (see Fig. 1).

PRODUCT SAFETY

This device incorporates beryllium oxide, the dust of which is toxic. The device is entirely safe provided that the BeO disc is not damaged.

MECHANICAL DATA

Dimensions in mm

Fig. 1 SOT-122.

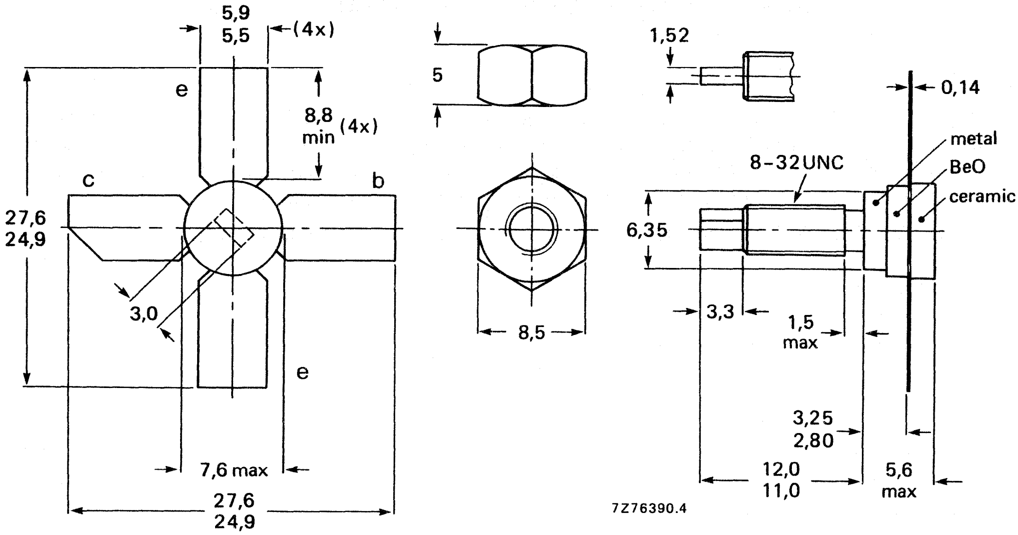

Torque on nut: min. 0,75 Nm
(7,5 kg cm)
max. 0,85 Nm
(8,5 kg cm)

Diameter of clearance hole in heatsink: max. 4,2 mm. Mounting hole to have no burrs at either end. De-burring must leave surface flat; do not chamfer or countersink either end of hole.

When locking is required an adhesive is preferred instead of a lock washer.

RATINGS

Limiting values in accordance with the Absolute Maximum System (IEC 134)

Collector-base voltage (open emitter)	V_{CBO}	max.	25	V
Collector-emitter voltage (open base)	V_{CEO}	max.	18	V
Emitter-base voltage (open collector)	V_{EBO}	max.	2	V
Collector current (d.c.)	I_C	max.	300	mA
Total power dissipation up to T_{mb} = 110 °C (see Fig. 7)	P_{tot}	max.	4,5	W
Storage temperature	T_{stg}		−65 to +150	°C
Operating junction temperature	T_j	max.	200	°C

THERMAL RESISTANCE

From junction to mounting base	$R_{th\ j\text{-}mb}$	=	20,0	K/W
From mounting base to heatsink	$R_{th\ mb\text{-}h}$	=	0,6	K/W

CHARACTERISTICS

$T_j = 25\ ^{o}C$ unless otherwise specified

Collector cut-off current $I_E = 0$; $V_{CB} = 15$ V	I_{CBO}	max.	50 μA
D.C. current gain $I_C = 240$ mA; $V_{CE} = 15$ V	h_{FE}	min.	25
Transition frequency at f = 500 MHz $I_C = 240$ mA; $V_{CE} = 15$ V	f_T	typ.	4 GHz
Collector capacitance at f = 1 MHz $I_E = I_e = 0$; $V_{CB} = 15$ V	C_c	typ.	3,8 pF
Emitter capacitance at f = 1 MHz $I_C = I_c = 0$; $V_{EB} = 0{,}5$ V	C_e	typ.	20 pF
Feedback capacitance at f = 1 MHz $I_C = 0$; $V_{CE} = 15$ V	C_{re}	typ.	2,3 pF
Collector-stud capacitance*	C_{cs}	typ.	0,8 pF

Maximum unilateral power gain (s_{re} assumed to be zero)

$$G_{UM} = 10 \log \frac{|s_{fe}|^2}{(1 - |s_{ie}|^2)\ (1 - |s_{oe}|^2)}$$

$I_C = 240$ mA; $V_{CE} = 15$ V; f = 800 MHz; $T_{amb} = 25\ ^{o}C$	G_{UM}	typ.	13 dB

Output voltage at $d_{im} = -60$ dB (see Figs 2 and 12)
(DIN 45004B, par. 6.3: 3-tone)
$I_C = 240$ mA; $V_{CE} = 15$ V; $R_L = 75\ \Omega$; $T_{amb} = 25\ ^{o}C$

$V_p = V_o$ at $d_{im} = -60$ dB; $f_p = 795{,}25$ MHz
$V_q = V_o -6$ dB ; $f_q = 803{,}25$ MHz
$V_r = V_o -6$ dB ; $f_r = 805{,}25$ MHz

measured at $f_{(p + q - r)} = 793{,}25$ MHz	V_o	typ.	1,6 V

---

* Measured with emitter and base grounded.

Output power at 1 dB gain compression (see Fig. 2)
I_C = 240 mA; V_{CE} = 15 V
R_L = 75 Ω; T_{amb} = 25 °C
measured at f = 800 MHz — P_{L1} typ. +28 dBm

Third order intercept point (see Fig. 2)
I_C = 240 mA; V_{CE} = 15 V
R_L = 75 Ω; T_{amb} = 25 °C
P_p = ITO − 6 dB; f_p = 800 MHz
P_q = ITO − 6 dB; f_q = 801 MHz
measured at $f_{(2q-p)}$ = 802 MHz and
at $f_{(2p-q)}$ = 799 MHz — ITO typ. +47 dBm

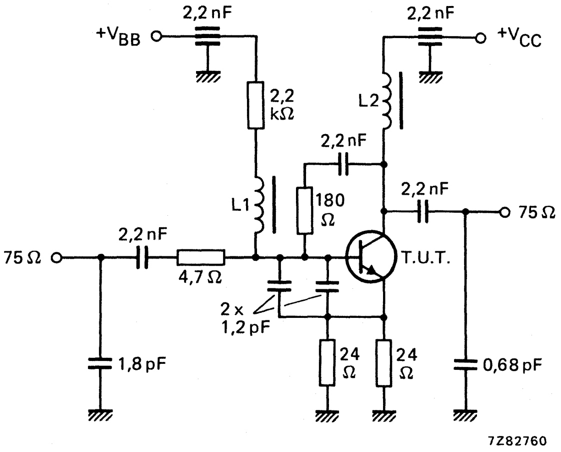

Fig. 2 Intermodulation distortion MATV test circuit. Power gain at f = 40 MHz to 860 MHz is typical 7 dB.

L1 = L2 = 5 μH micro choke.

s-parameters (common emitter) at V_{CE} = 7,5 V; T_{amb} = 25 °C; typical values.

I_C mA	f MHz	s_{ie}	s_{re}	s_{fe}	s_{oe}	G_{UM} dB
50	40	0,66/−135,7°	0,02/41,1°	30,4/124,0°	0,64/ −79,0°	34,4
	100	0,77/−164,0°	0,03/33,6°	14,8/101,2°	0,45/−125,3°	28,3
	200	0,80/−176,3°	0,03/44,1°	7,7/ 89,1°	0,39/−147,9°	22,9
	500	0,80/+170,2°	0,06/55,3°	3,1/ 70,3°	0,38/−159,5°	14,9
	800	0,78/+157,0°	0,09/60,5°	2,0/ 57,2°	0,42/−165,6°	10,9
	1000	0,78/+152,4°	0,11/61,8°	1,6/ 48,1°	0,43/−167,6°	9,0
	1200	0,75/+142,7°	0,13/59,9°	1,4/ 41,1°	0,46/−171,2°	7,5
100	40	0,67/−146,1°	0,02/40,9°	33,5/121,5°	0,64/ −90,4°	35,4
	100	0,78/−167,5°	0,02/37,2°	15,6/100,4°	0,49/−134,4°	29,1
	200	0,80/−178,3°	0,03/47,0°	8,1/ 89,2°	0,45/−155,5°	23,6
	500	0,79/+168,9°	0,06/60,4°	3,4/ 72,0°	0,43/−170,5°	15,8
	800	0,77/+156,1°	0,09/62,0°	2,2/ 59,5°	0,44/−174,5°	11,7
	1000	0,77/+151,5°	0,11/61,9°	1,8/ 51,5°	0,44/−178,5°	9,9
	1200	0,74/+141,8°	0,14/59,4°	1,5/ 44,0°	0,46/−178,5°	8,0
150	40	0,68/−149,0°	0,02/40,8°	34,3/120,6°	0,64/ −94,6°	35,7
	100	0,78/−168,8°	0,02/38,8°	15,9/100,0°	0,50/−138,0°	29,3
	200	0,80/−179,0°	0,03/49,0°	8,2/ 89,2°	0,47/−158,2°	23,8
	500	0,79/+168,5°	0,06/61,6°	3,4/ 72,5°	0,45/−173,2°	15,9
	800	0,77/+155,8°	0,09/62,5°	2,2/ 60,3°	0,46/−177,1°	11,8
	1000	0,76/+151,2°	0,12/62,1°	1,8/ 52,5°	0,46/+177,1°	9,9
	1200	0,73/+141,6°	0,14/59,1°	1,5/ 45,1°	0,47/+177,1°	7,9
200	40	0,68/−150,7°	0,02/40,5°	34,7/120,0°	0,64/ −97,3°	37,2
	100	0,78/−169,7°	0,02/39,6°	15,9/ 99,7°	0,51/−140,4°	29,4
	200	0,80/−179,8°	0,03/50,1°	8,2/ 89,0°	0,49/−159,8°	23,9
	500	0,79/+168,2°	0,06/62,1°	3,4/ 72,6°	0,47/−174,8°	16,0
	800	0,77/+155,6°	0,09/62,6°	2,2/ 60,5°	0,47/−178,6°	11,8
	1000	0,76/+150,9°	0,12/62,1°	1,8/ 52,9°	0,46/+175,5°	9,9
	1200	0,73/+141,4°	0,14/59,0°	1,5/ 45,3°	0,47/+174,6°	7,9
250	40	0,69/−151,9°	0,02/40,1°	34,6/119,4°	0,63/ −99,4°	35,9
	100	0,79/−170,3°	0,02/39,9°	15,8/ 99,5°	0,52/−141,8°	29,6
	200	0,80/+180,0°	0,03/51,0°	8,1/ 88,9°	0,49/−160,9°	23,8
	500	0,80/+168,0°	0,06/62,5°	3,4/ 72,6°	0,47/−175,6°	16,2
	800	0,78/+155,4°	0,09/62,8°	2,2/ 60,6°	0,48/−179,5°	12,1
	1000	0,77/+150,8°	0,12/62,1°	1,8/ 53,0°	0,47/+174,5°	10,1
	1200	0,73/+141,3°	0,14/58,9°	1,5/ 45,6°	0,47/+173,9°	7,9
300	40	0,69/−152,9°	0,02/39,7°	34,4/118,9°	0,62/−101,2°	35,6
	100	0,79/−170,8°	0,02/40,1°	15,5/ 99,2°	0,52/−143,2°	29,4
	200	0,80/+179,6°	0,03/51,5°	8,0/ 88,8°	0,50/−161,7°	23,7
	500	0,80/+167,9°	0,06/62,8°	3,4/ 72,5°	0,48/−176,2°	16,2
	800	0,78/+155,3°	0,09/62,9°	2,2/ 60,5°	0,48/+179,8°	12,1
	1000	0,77/+150,6°	0,12/62,1°	1,8/ 53,0°	0,47/+173,9°	10,1
	1200	0,74/+141,1°	0,14/59,1°	1,5/ 45,5°	0,48/+173,4°	8,1

→ **s-parameters** (common emitter) at V_{CE} = 15 V; T_{amb} = 25 °C; typical values.

I_C mA	f MHz	s_{ie}	s_{re}	s_{fe}	s_{oe}	G_{UM} dB
50	40	0,63/−132,3°	0,02/41,8°	33,5/126,6°	0,62/ −72,9°	34,8
	100	0,75/−161,1°	0,02/34,0°	16,4/103,0°	0,41/−115,2°	28,7
	200	0,78/−174,8°	0,03/40,7°	8,6/ 90,1°	0,34/−139,4°	23,3
	500	0,78/+169,9°	0,06/56,8°	3,6/ 71,4°	0,34/−153,8°	15,7
	800	0,77/+157,5°	0,08/60,9°	2,3/ 57,6°	0,37/−157,4°	11,8
	1000	0,74/+150,3°	0,10/61,8°	1,9/ 48,8°	0,40/−160,3°	9,8
	1200	0,73/+143,2°	0,12/61,0°	1,5/ 41,2°	0,42/−162,9°	7,7
100	40	0,63/−140,5°	0,02/41,6°	36,4/125,0°	0,61/ −82,0°	35,4
	100	0,76/−164,8°	0,02/37,3°	17,5/102,3°	0,44/−126,8°	29,5
	200	0,78/−176,8°	0,03/46,7°	9,1/ 90,3°	0,39/−149,8°	24,0
	500	0,77/+168,8°	0,06/60,3°	3,6/ 72,6°	0,38/−164,2°	16,2
	800	0,76/+156,7°	0,09/62,1°	2,4/ 60,0°	0,39/−168,6°	12,1
	1000	0,73/+149,6°	0,11/61,7°	2,0/ 51,2°	0,40/−170,8°	10,1
	1200	0,72/+142,6°	0,13/60,2°	1,7/ 44,6°	0,42/−172,6°	8,6
150	40	0,64/−143,2°	0,02/41,1°	37,6/123,9°	0,60/ −86,5°	35,7
	100	0,76/−166,0°	0,02/38,3°	17,9/101,8°	0,45/−131,0°	29,8
	200	0,78/−177,5°	0,03/48,1°	9,3/ 90,2°	0,41/−153,1°	24,2
	500	0,77/+168,2°	0,06/61,2°	3,9/ 73,1°	0,40/−167,7°	16,5
	800	0,76/+156,3°	0,09/62,2°	2,5/ 60,6°	0,40/−172,0°	12,5
	1000	0,72/+149,2°	0,11/61,5°	2,0/ 52,2°	0,41/−174,6°	10,0
	1200	0,72/+142,2°	0,13/59,5°	1,7/ 45,3°	0,42/−176,1°	8,6
200	40	0,65/−144,0°	0,02/40,6°	38,5/122,8°	0,60/ −90,2°	36,0
	100	0,76/−166,7°	0,02/39,0°	18,0/101,2°	0,46/−133,7°	29,9
	200	0,78/−177,9°	0,03/49,1°	9,3/ 89,9°	0,42/−155,2°	24,3
	500	0,77/+168,0°	0,06/61,6°	3,9/ 73,3°	0,41/−169,7°	16,5
	800	0,76/+156,1°	0,09/62,3°	2,5/ 60,9°	0,41/−174,0°	12,7
	1000	0,72/+149,1°	0,11/61,5°	2,1/ 52,8°	0,42/−175,7°	10,5
	1200	0,71/+142,1°	0,13/59,2°	1,7/ 45,8°	0,42/−177,3°	8,5
250	40	0,66/−144,9°	0,02/40,7°	38,6/122,1°	0,60/ −91,6°	36,2
	100	0,76/−167,0°	0,02/39,2°	18,0/100,8°	0,46/−135,4°	29,9
	200	0,78/−178,1°	0,03/49,5°	9,3/ 89,7°	0,43/−156,2°	24,3
	500	0,77/+167,8°	0,06/62,0°	3,9/ 73,2°	0,42/−170,3°	16,6
	800	0,76/+156,1°	0,09/62,4°	2,5/ 61,0°	0,41/−174,8°	12,8
	1000	0,72/+148,9°	0,11/61,5°	2,0/ 52,6°	0,41/−177,2°	10,0
	1200	0,72/+141,8°	0,14/58,8°	1,7/ 45,7°	0,41/−178,3°	8,6
300	40	0,67/−145,2°	0,02/40,1°	38,7/121,3°	0,59/ −93,3°	37,2
	100	0,77/−167,3°	0,02/39,0°	17,9/100,3°	0,46/−136,5°	30,0
	200	0,79/−178,2°	0,03/49,6°	9,2/ 89,4°	0,43/−156,8°	24,4
	500	0,78/+167,7°	0,06/62,0°	3,9/ 72,9°	0,42/−170,6°	16,7
	800	0,76/+156,1°	0,09/62,4°	2,5/ 60,8°	0,41/−174,7°	12,8
	1000	0,73/+148,8°	0,11/61,4°	2,0/ 52,5°	0,41/−177,4°	10,1
	1200	0,72/+142,0°	0,14/59,2°	1,7/ 45,7°	0,42/+177,4°	8,6

Conditions for Figs 3 and 4:

V_{CE} = 15 V; I_C = 240 mA;
T_{amb} = 25 °C; typical values.

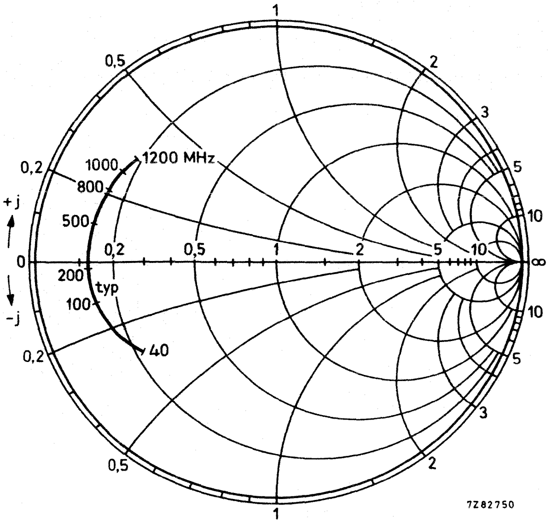

Fig. 3 Input impedance derived from input reflection coefficient s_{ie} co-ordinates in ohm x 50.

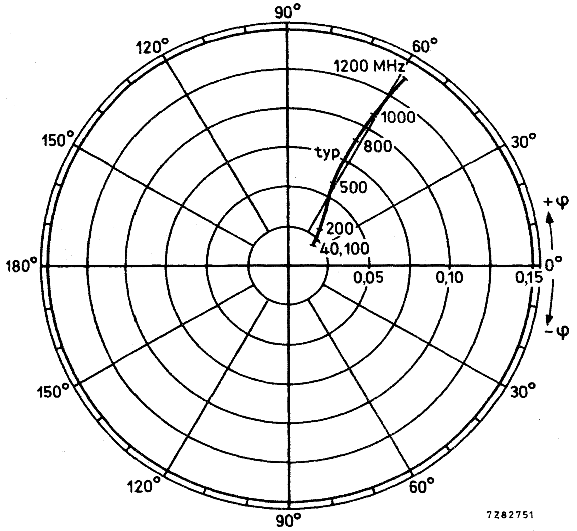

Fig. 4 Reverse transmission coefficient s_{re}.

Conditions for Figs 5 and 6:
V_{CE} = 15 V; I_C = 240 mA;
T_{amb} = 25 °C; typical values.

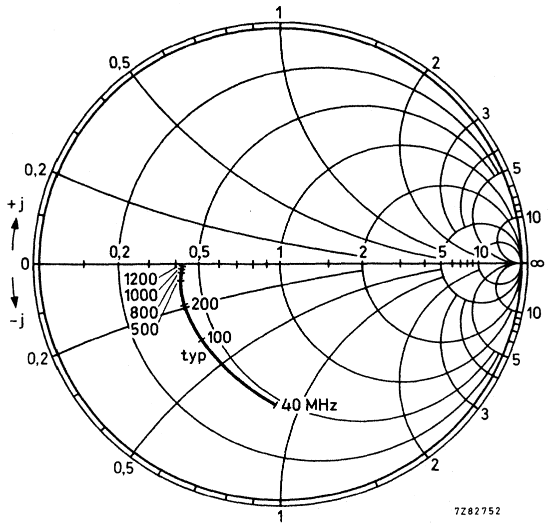

Fig. 5 output impedance derived from output reflection coefficient s_{oe} co-ordinates in ohm x 50.

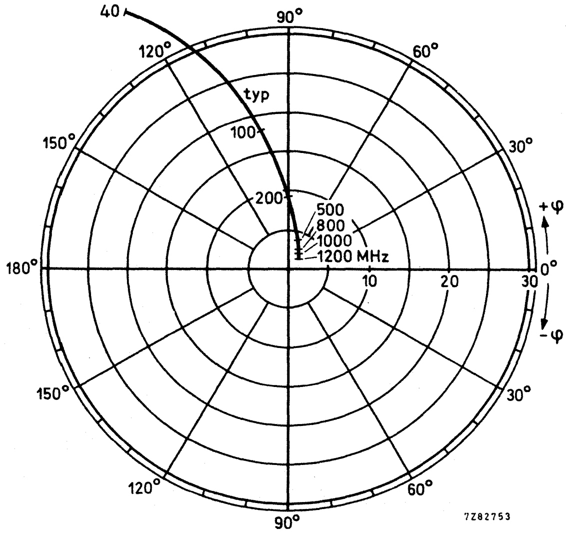

Fig. 6 Forward transmission coefficient s_{fe}.

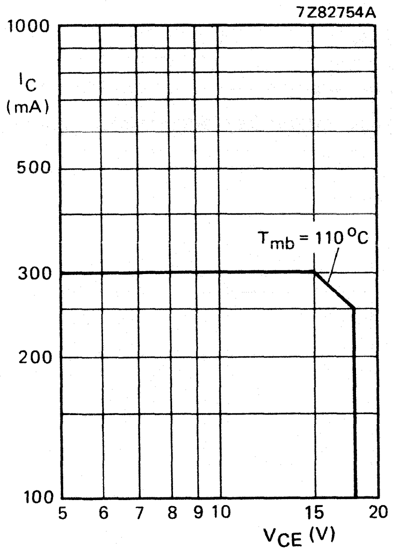

Fig. 7 D.C. SOAR.

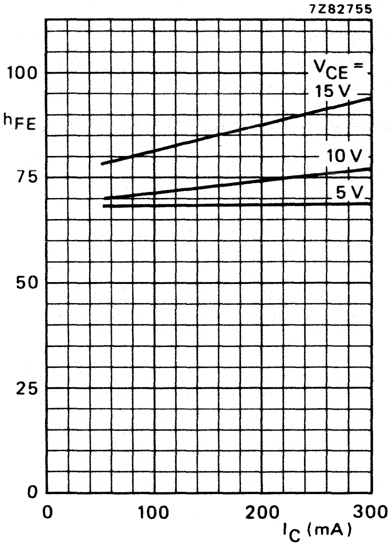

Fig. 8 T_j = 25 °C; typical values.

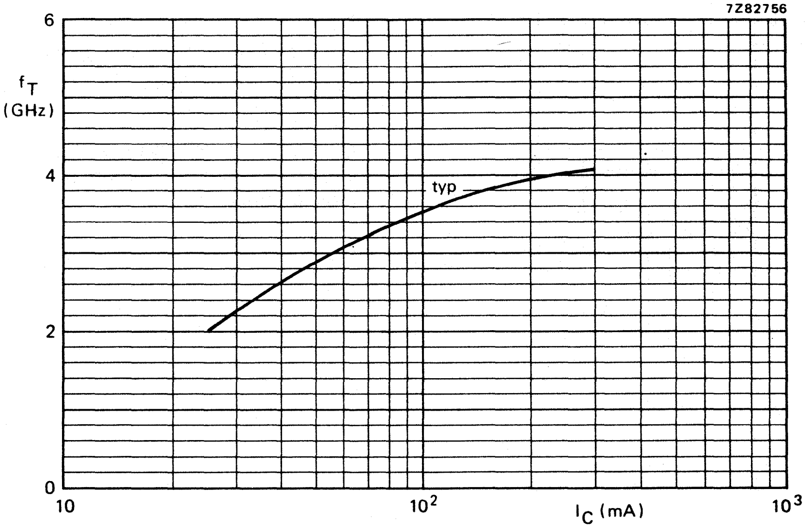

Fig. 9 V_{CE} = 15 V; f = 500 MHz; T_j = 25 °C; typical values.

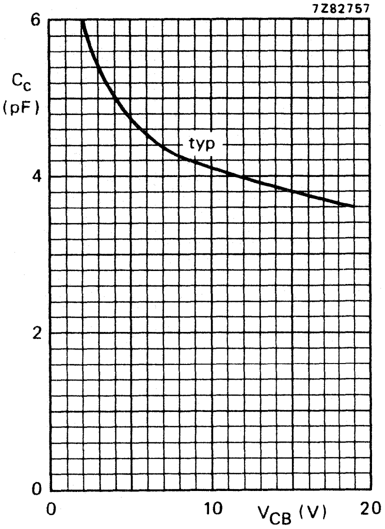

Fig. 10.

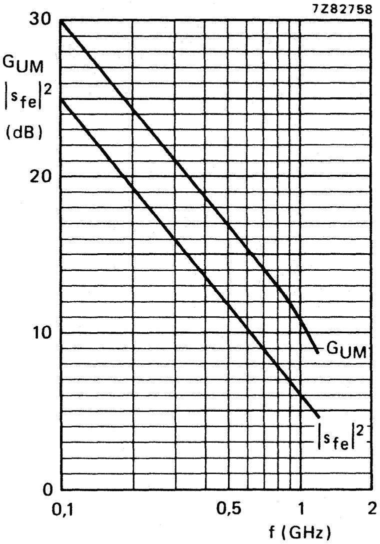

Fig. 11.

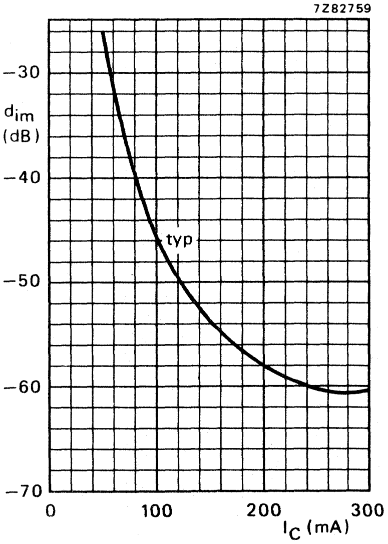

Fig. 12.

Conditions for Figs 10, 11 and 12:

Fig. 10 $I_E = I_e = 0$; $T_{amb} = 25\ ^oC$; typ. values.

Fig. 11 $V_{CE} = 15$ V; $I_C = 240$ mA; $T_{amb} = 25\ ^oC$; typical values.

Fig. 12 $V_{CE} = 15$ V; $V_o = 1{,}6$ V; $f_{(p+q-r)} = 793{,}25$ MHz; $T_{amb} = 25\ ^oC$; measured in MATV test circuit (see Fig. 2); typical values.

N-P-N 1 GHz WIDEBAND TRANSISTOR

N-P-N transistor primarily intended for final stages in u.h.f. amplifiers. The integrated diffused emitter ballasting resistors and application of gold sandwich metallization ensure an optimum temperature profile and excellent reliability properties. This device features extremely high output voltage capabilities. The transistor has a ¼″ capstan envelope with ceramic cap. All leads are isolated from the stud.

QUICK REFERENCE DATA

Collector-base voltage, open emitter	V_{CBO}	max.	25	V
Collector-emitter voltage, open base	V_{CEO}	max.	18	V
Collector current (d.c.)	I_C	max.	600	mA
Total power dissipation up to T_{mb} = 75°C	P_{tot}	max.	9	W
Junction temperature	T_j	max.	200	°C
Transition frequency at f = 500 MHz I_C = 500 mA; V_{CE} = 15 V	f_T	typ.	4,0	GHz
Maximum unilateral power gain at f = 800 MHz I_C = 500 mA; V_{CE} = 15 V	G_{UM}	typ.	12,5	dB
Output voltage at d_{im} = −60 dB I_C = 500 mA; V_{CE} = 15 V; R_L = 75 Ω; $f_{(p+q-r)}$ = 793,25 MHz	V_o	typ.	2,5	V

MECHANICAL DATA

SOT-122 (see Fig. 1).

PRODUCT SAFETY. This device incorporates beryllium oxide, the dust of which is toxic. The device is entirely safe provided that the BeO disc is not damaged.

MECHANICAL DATA

Dimensions in mm

Fig. 1 SOT-122.

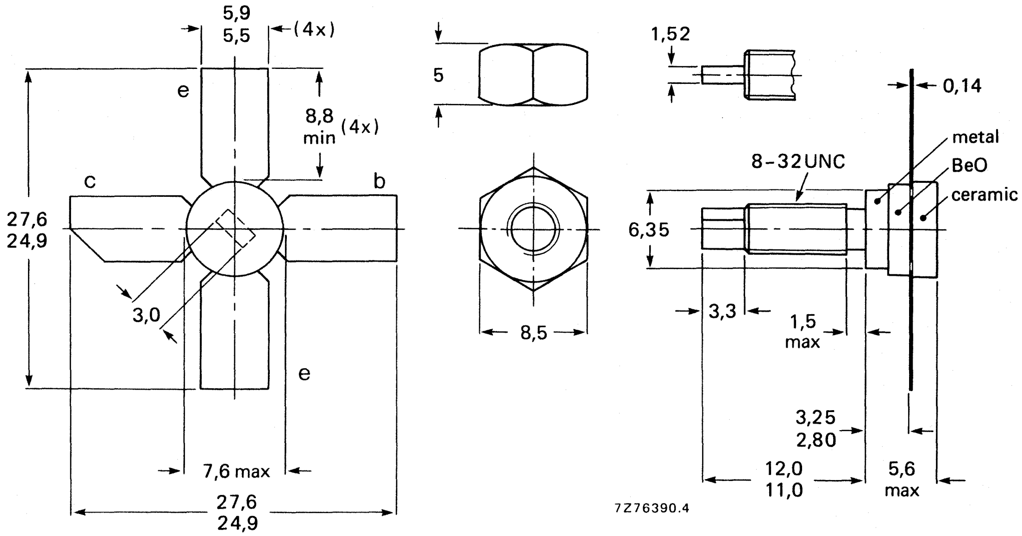

Torque on nut: min. 0,75 Nm (7,5 kg.cm) max. 0,85 Nm (8,5 kg.cm)	Diameter of clearance hole: max. 4,2 mm. Mounting hole to have no burrs at either end. De-burring must leave surface flat; do not chamfer or countersink either end of hole.

When locking is required an adhesive is preferred instead of a lock washer.

RATINGS

Limiting values in accordance with the Absolute Maximum System (IEC 134)

Collector-base voltage, open emitter	V_{CBO}	max.	25	V
Collector-emitter voltage, open base	V_{CEO}	max.	18	V
Emitter-base voltage, open collector	V_{EBO}	max.	2	V
Collector current (d.c.)	I_C	max.	600	mA
Total power dissipation up to T_{mb} = 75°C	P_{tot}	max.	9	W
Storage temperature	T_{stg}	−65 to + 150		°C
Junction temperature	T_j	max.	200	°C

THERMAL RESISTANCE

From junction to mounting base	$R_{th\ j\text{-}mb}$	=	14	K/W
From mounting base to heatsink	$R_{th\ mb\text{-}h}$	=	0,6	K/W

CHARACTERISTICS

$T_j = 25\ ^oC$ unless otherwise specified

Collector cut-off current $I_E = 0;\ V_{CB} = 15\ V$	I_{CBO}	max.	75 μA	
D.C. current gain $I_C = 500\ mA;\ V_{CE} = 15\ V$	h_{FE}	min.	25	
Transition frequency at f = 500 MHz $I_C = 500\ mA;\ V_{CE} = 15\ V$	f_T	typ.	4,0 GHz	
Collector capacitance at f = 1 MHz $I_E = i_e = 0;\ V_{CB} = 15\ V$	C_c	typ.	7,0 pF	
Emitter capacitance at f = 1 MHz $I_C = i_c = 0;\ V_{EB} = 0{,}5\ V$	C_e	typ.	40 pF	←
Feedback capacitance $I_C = 0;\ V_{CE} = 15\ V$	C_{re}	typ.	4,0 pF	
Collector-stud capacitance*	C_{cs}	typ.	0,8 pF	
Maximum unilateral power gain (s_{re} assumed to be zero) $G_{UM} = 10 \log \frac{\lvert s_{fe}\rvert^2}{[1 - \lvert s_{ie}\rvert^2]\ [1 - \lvert s_{oe}\rvert^2]}$ $I_C = 500\ mA;\ V_{CE} = 15\ V;\ f = 800\ MHz;$ $T_{amb} = 25\ ^oC$	G_{UM}	typ.	12,5 dB	
Output voltage at $d_{im} = -60$ dB (see Fig. 2) $I_C = 500\ mA;\ V_{CE} = 15\ V;$ $R_L = 75\ \Omega;\ T_{amb} = 25\ ^oC$ $V_p = V_o$ at $d_{im} = -60$ dB; $f_p = 795{,}25$ MHz $V_q = V_o - 6$ dB ; $f_q = 803{,}25$ MHz $V_r = V_o - 6$ dB ; $f_r = 805{,}25$ MHz measured at $f_{(p+q-r)} = 793{,}25$ MHz	V_o	typ.	2,5 V	

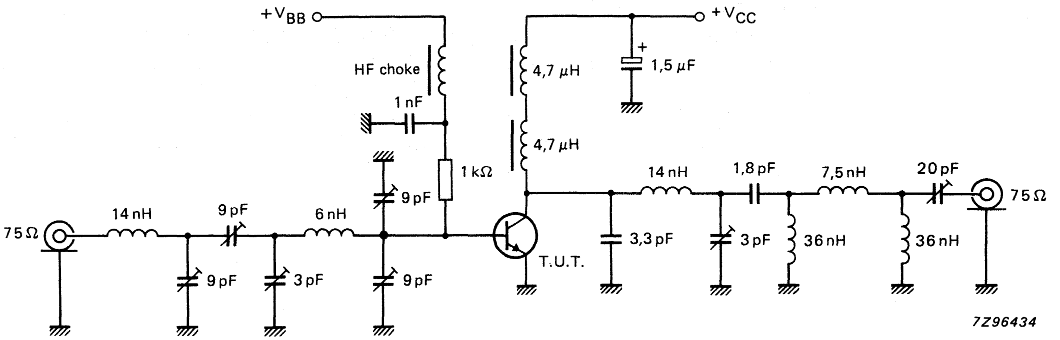

Fig. 2 High gain test circuit.

---

* Measured with emitter and base grounded.

→ **s-parameters** (common emitter) at V_{CE} = 15 V; T_{amb} = 25 °C; typical values

I_C mA	f MHz	s_{ie}	s_{fe}	s_{re}	s_{oe}	G_{UM} dB
100	40	0,87/−161,9°	27,9/104,8°	0,017/24,5°	0,60/−140,2°	37,0
	100	0,89/−174,2°	11,7/ 92,6°	0,019/29,3°	0,58/−163,7°	30,0
	200	0,90/+180,0°	5,8/ 85,8°	0,024/43,0°	0,58/−172,5°	24,3
	500	0,89/+171,6°	2,4/ 70,3°	0,044/59,9°	0,59/−178,3°	16,3
	800	0,82/+164,3°	1,6/ 58,1°	0,068/64,2°	0,60/+179,0°	12,3
	1000	0,86/+159,9°	1,2/ 51,7°	0,086/66,1°	0,60/+176,4°	9,4
	1200	0,86/+155,6°	1,1/ 42,4°	0,105/63,7°	0,60/+173,8°	8,6
200	40	0,87/−165,2°	29,3/103,8°	0,014/26,2°	0,65/−146,8°	37,9
	100	0,90/−175,8°	12,1/ 92,7°	0,017/34,9°	0,65/−167,3°	31,3
	200	0,90/+179,1°	6,1/ 86,9°	0,023/49,7°	0,65/−175,5°	25,3
	500	0,89/+170,7°	2,5/ 72,7°	0,046/63,5°	0,65/+177,7°	17,2
	800	0,88/+163,5°	1,6/ 61,4°	0,072/65,8°	0,64/+173,6°	12,6
	1000	0,86/+159,2°	1,3/ 55,3°	0,090/66,5°	0,63/+170,6°	10,5
	1200	0,84/+155,1°	1,2/ 48,9°	0,109/63,3°	0,62/+167,8°	9,0
300	40	0,88/−166,4°	29,6/103,2°	0,013/26,8°	0,67/−149,3°	38,5
	100	0,90/−176,1°	12,3/ 92,7°	0,016/36,2°	0,67/−168,5°	31,6
	200	0,90/+178,6°	6,2/ 86,9°	0,023/51,8°	0,67/−176,2°	25,6
	500	0,89/+171,0°	2,5/ 73,5°	0,046/69,6°	0,67/+176,6°	17,4
	800	0,88/+163,8°	1,6/ 63,2°	0,072/66,2°	0,66/+172,0°	12,6
	1000	0,86/+159,5°	1,4/ 56,9°	0,091/66,7°	0,64/+168,7°	11,1
	1200	0,85/+154,5°	1,2/ 49,5°	0,110/63,3°	0,63/+165,8°	9,3
400	40	0,88/−166,8°	29,6/102,7°	0,013/26,8°	0,69/−150,8°	38,7
	100	0,90/−176,4°	12,1/ 92,4°	0,016/36,9°	0,68/+169,2°	31,6
	200	0,90/+178,5°	6,1/ 87,1°	0,023/52,4°	0,68/−176,7°	25,6
	500	0,89/+170,7°	2,5/ 74,1°	0,047/65,2°	0,68/+176,0°	17,5
	800	0,88/+163,4°	1,6/ 64,1°	0,073/66,3°	0,66/+171,4°	12,5
	1000	0,86/+159,0°	1,3/ 56,4°	0,092/66,7°	0,65/+168,0°	10,5
	1200	0,85/+154,6°	1,2/ 50,7°	0,111/63,1°	0,64/+164,9°	9,4
500	40	0,88/−167,0°	29,3/102,2°	0,013/27,0°	0,69/−151,8°	38,6
	100	0,90/−176,6°	12,1/ 92,2°	0,016/37,0°	0,69/−169,5°	31,7
	200	0,90/+178,6°	6,1/ 86,8°	0,023/52,8°	0,68/−176,8°	25,6
	500	0,89/+170,5°	2,5/ 73,5°	0,047/65,2°	0,68/+175,8°	17,5
	800	0,88/+164,0°	1,6/ 62,5°	0,073/66,5°	0,67/+171,0°	12,5
	1000	0,86/+159,2°	1,3/ 56,6°	0,092/66,7°	0,65/+167,7°	10,5
	1200	0,84/+154,8°	1,2/ 50,6°	0,112/63,1°	0,64/+164,7°	9,2

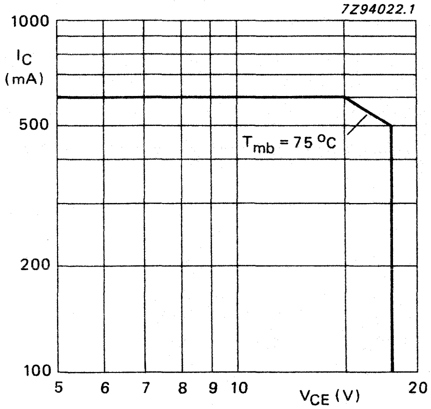

Fig. 3 D.C. SOAR.

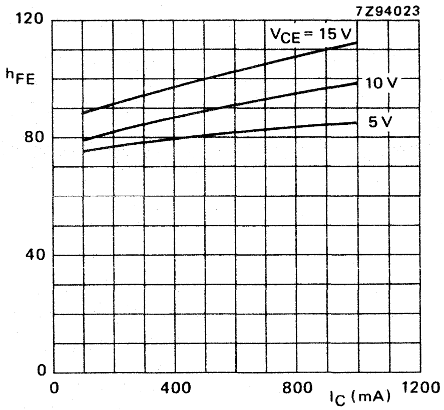

Fig. 4 T_j = 25 °C; typ. values.

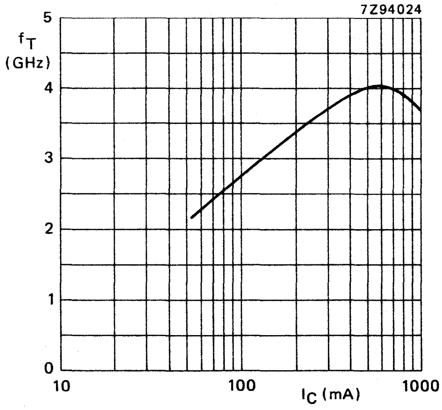

Fig. 5 V_{CE} = 15 V; f = 500 MHz;
T_j = 25 °C; typical values.

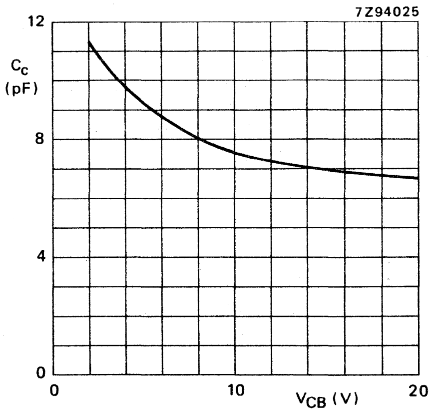

Fig. 6 $I_E = i_e = 0$; f = 1 MHz;
T_j = 25 °C; typical values.

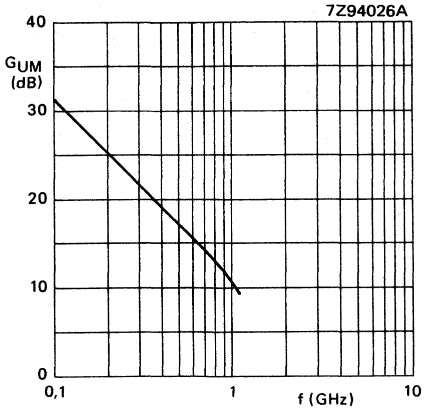

Fig. 7 V_{CE} = 15 V; I_C = 500 mA;
T_{amb} = 25 °C; typical values.

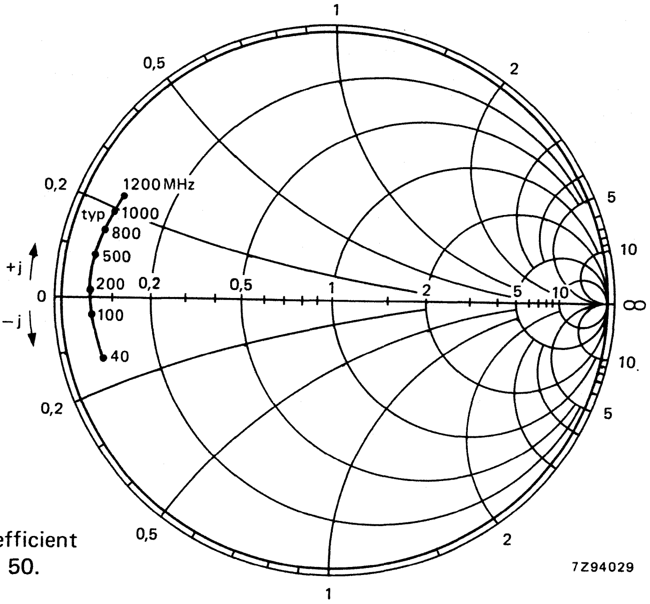

Input impedance derived from input reflection coefficient s_{ie} co-ordinates in ohm x 50.

Fig. 8.

Conditions for Figs 8 and 9:

V_{CE} = 15 V; I_C = 500 mA;
T_{amb} = 25 °C; typical values.

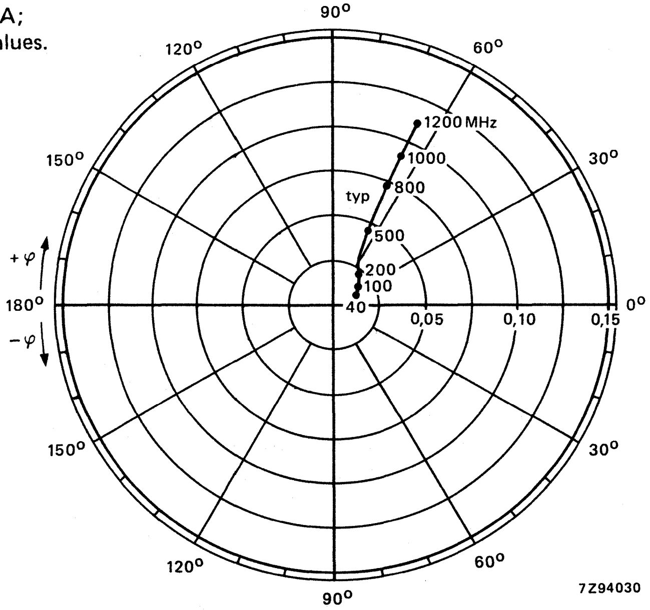

Reverse transmission coefficient s_{re}.

Fig. 9.

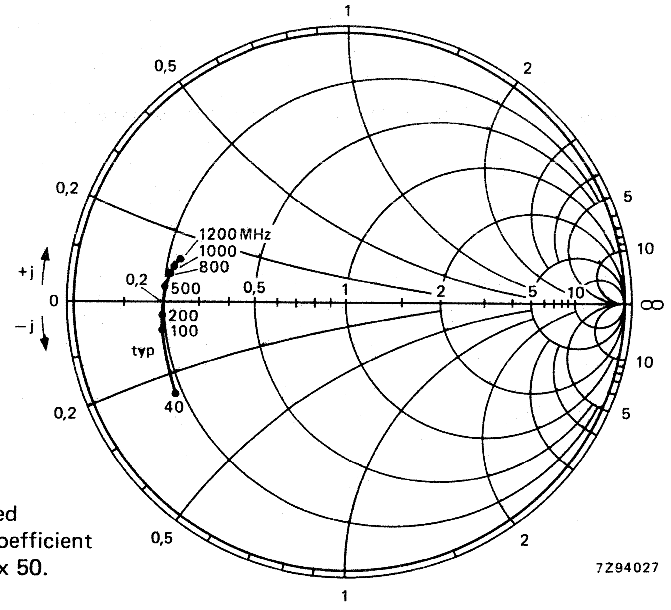

Output impedance derived from output reflection coefficient s_{oe} co-ordinates in ohm x 50.

Fig. 10.

Conditions for Figs 9 and 10:

$V_{CE} = 15$ V; $I_C = 500$ mA;
$T_{amb} = 25$ °C; typical values.

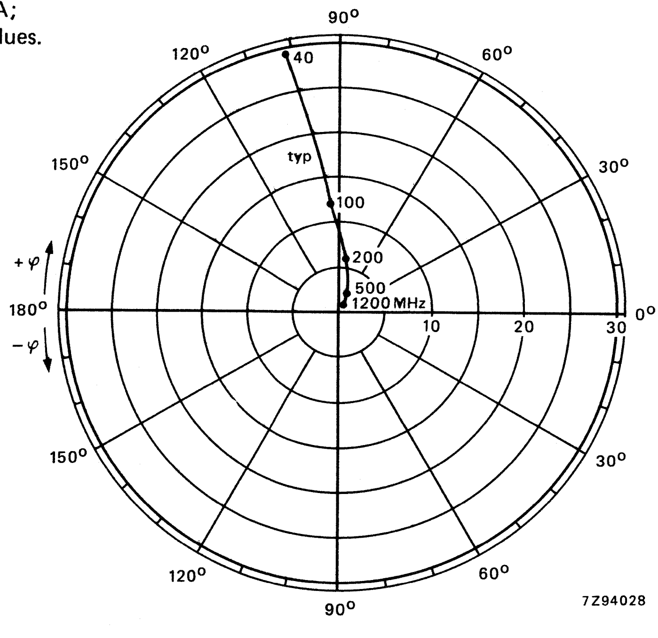

Forward transmission coefficient s_{fe}.

Fig. 11.

N-P-N 2 GHz WIDEBAND TRANSISTOR

N-P-N transistor in a miniature hermetically sealed micro stripline encapsulation featuring a high transition frequency and low noise. It is suitable for amplifiers up to S-band frequencies in instrumentation and microwave systems.

QUICK REFERENCE DATA

Collector-base voltage (open emitter)	V_{CBO}	max	20	V
Collector-emitter voltage (open base)	V_{CEO}	max	15	V
Collector current (d.c.)	I_C	max	25	mA
Total power dissipation up to T_{amb} = 110 °C	P_{tot}	max	180	mW
Transition frequency I_C = 14 mA; V_{CE} = 10 V	f_T	typ	5,0	GHz
Noise figure at optimum source impedance I_C = 2 mA; V_{CE} = 10 V; f = 1 GHz	F	typ	2,5	dB
Transducer power gain I_C = 14 mA; V_{CE} = 10 V; f = 1 GHz	$\lvert s_{fe} \rvert^2$	typ	15,5	dB

MECHANICAL DATA

Dimensions in mm

Fig. 1 SOT-100.

Metallized lid connected to emitter

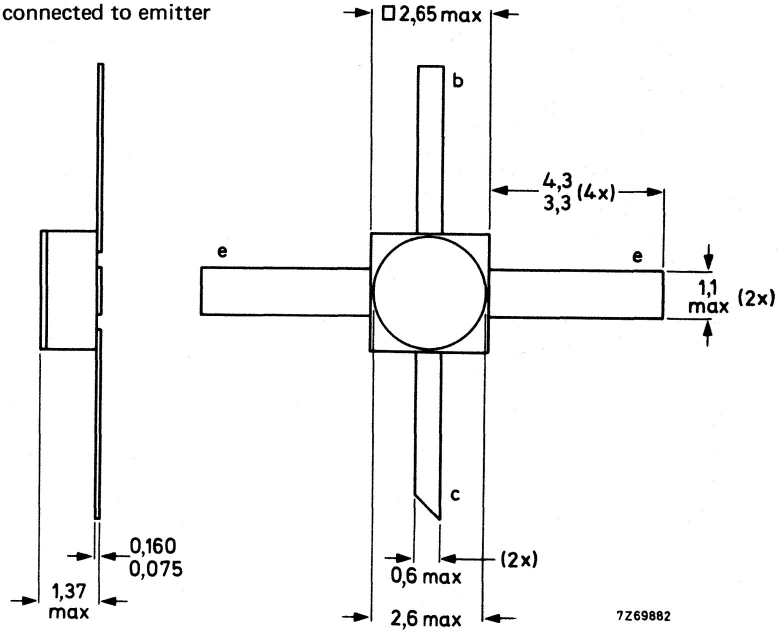

RATINGS

Limiting values in accordance with the Absolute Maximum System (IEC 134)

Collector-base voltage (open emitter; I_C = 10 μA)	V_{CBO}	max	20 V
Collector-emitter voltage (open base; I_C = 10 mA)	V_{CEO}	max	15 V
Emitter-base voltage (open collector; I_E = 10 μA)	V_{EBO}	max	2 V
Collector current (d.c.)	I_C	max	25 mA
Total power dissipation up to T_{amb} = 110 °C	P_{tot}	max	180 mW
Storage temperature	T_{stg}	−65 to + 200 °C	
Junction temperature	T_j	max	200 °C

THERMAL RESISTANCE

From junction to ambient in free air mounted on a fibre-glass print of 40 mm x 25 mm x 1 mm	$R_{th\ j\text{-}a}$	=	500 K/W

CHARACTERISTICS

T_{amb} = 25 °C unless otherwise specified

Collector cut-off current			
$I_E = 0$; V_{CB} = 10 V	I_{CBO}	max.	50 nA
→ D.C. current gain			
I_C = 14 mA; V_{CE} = 10 V	h_{FE}	min.	25
→ Transition frequency			
I_C = 14 mA; V_{CE} = 10 V; f = 500 MHz	f_T	typ	5,0 GHz
Collector capacitance at f = 1 MHz			
$I_E = I_e = 0$; V_{CB} = 10 V	C_c	typ	0,35 pF
Emitter capacitance at f = 1 MHz			
$I_C = I_c = 0$; V_{EB} = 0,5 V	C_e	typ	1,1 pF
Feedback capacitance at f = 1 MHz			
I_C = 2 mA; V_{CE} = 10 V	C_{re}	typ	0,3 pF
Noise figure at optimum source impedance			
I_C = 2 mA; V_{CE} = 10 V; f = 1 GHz	F	typ	2,5 dB
I_C = 2 mA; V_{CE} = 10 V; f = 4 GHz	F	typ	6,5 dB

Maximum unilateral power gain (s_{re} assumed to be zero)

$$G_{UM} = 10 \log \frac{|s_{fe}|^2}{[1-|s_{ie}|^2]\,[1-|s_{oe}|^2]}$$

I_C = 14 mA; V_{CE} = 10 V; f = 1 GHz	G_{UM}	typ	17,0 dB
I_C = 14 mA; V_{CE} = 10 V; f = 4 GHz	G_{UM}	typ	6,5 dB
Transducer power gain			
I_C = 14 mA; V_{CE} = 10 V; f = 1 GHz	$\lvert s_{fe}\rvert^2$	typ	15,5 dB
I_C = 14 mA; V_{CE} = 10 V; f = 4 GHz	$\lvert s_{fe}\rvert^2$	typ	3,5 dB

→

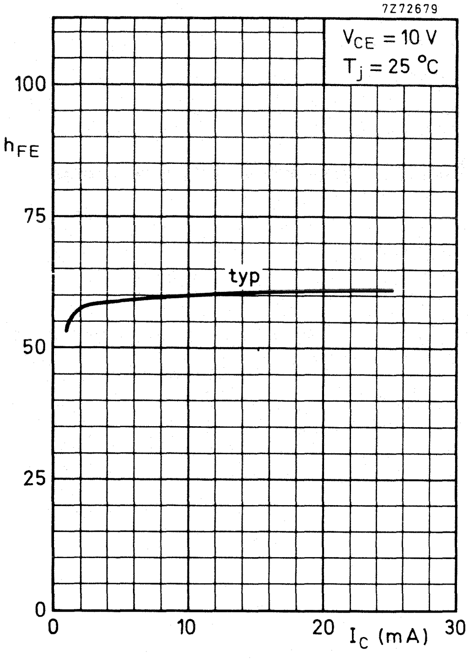

Fig. 2 V_{CE} = 10 V; T_j = 25 °C; typical values.

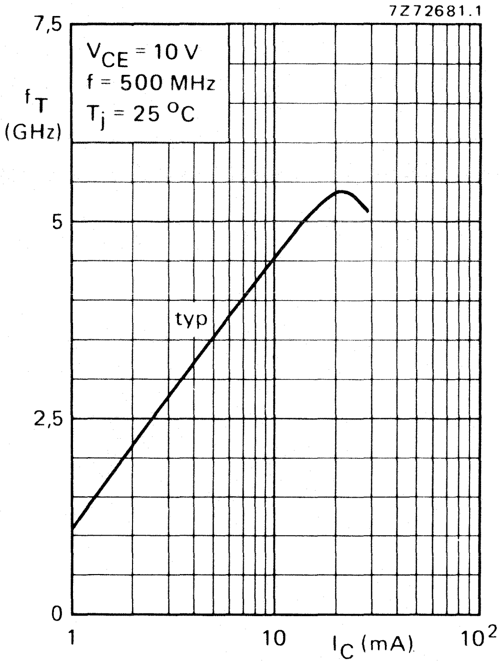

Fig. 3 V_{CE} = 10 V; f = 500 MHz; T_j = 25 °C; typical values.

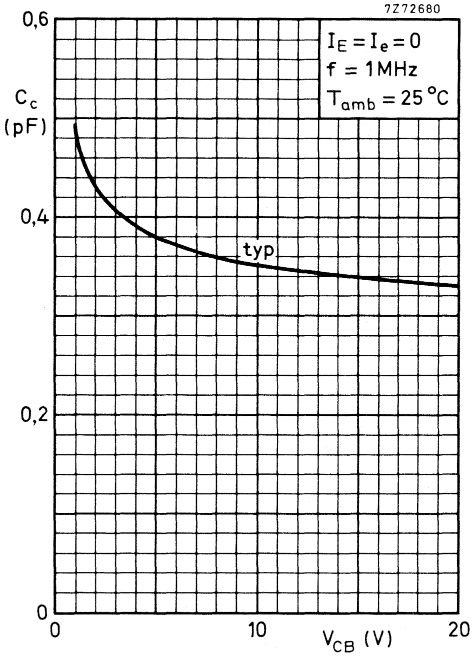

Fig. 4 $I_E = i_e = 0$; f = 1 MHz; T_{amb} = 25 °C; typical values.

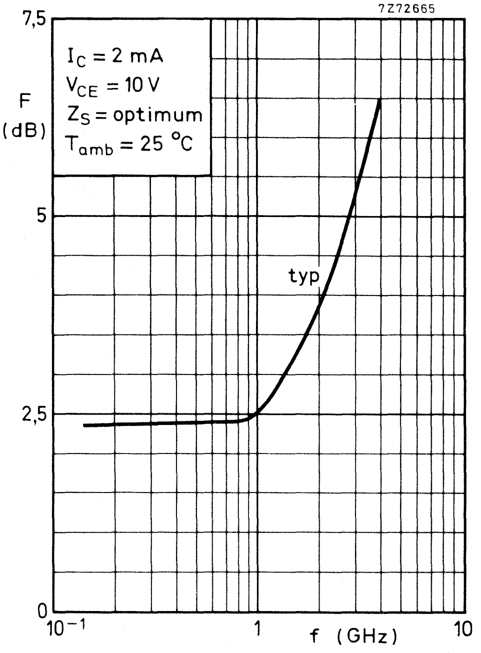

Fig. 5 V_{CE} = 10 V; I_C = 2 mA; Z_S = opt.; T_{amb} = 25 °C; typical values.

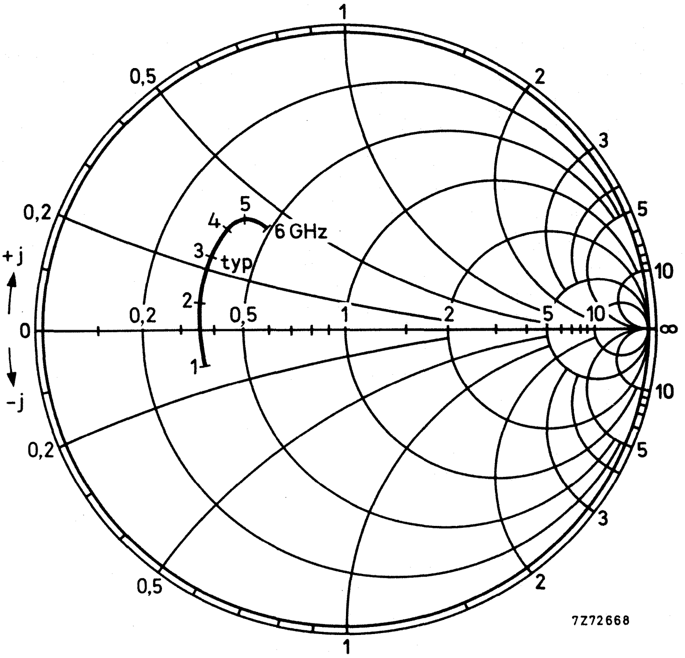

Fig. 6 V_{CE} = 10 V; I_C = 14 mA; T_{amb} = 25 °C; typical values.

Input impedance derived from input reflection coefficient s_{ie} co-ordinates in ohm x 50.

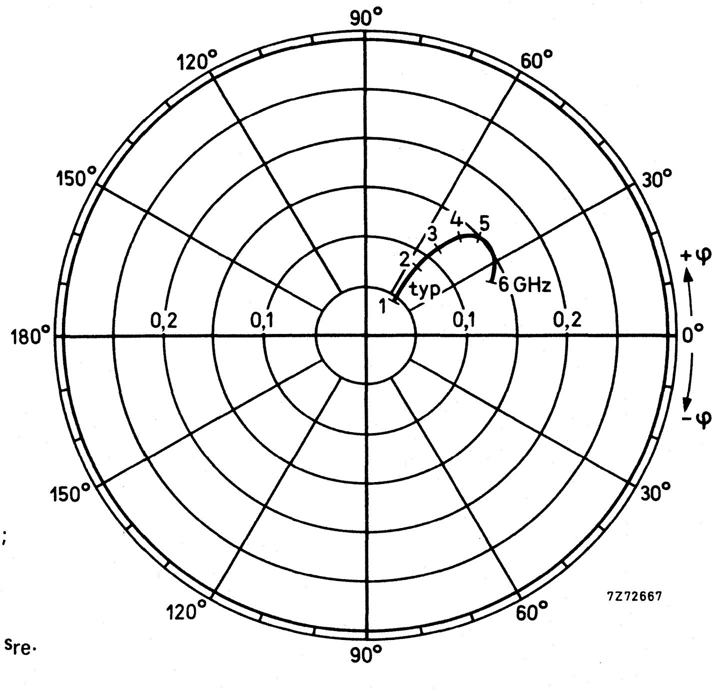

Fig. 7 V_{CE} = 10 V; I_C = 14 mA; T_{amb} = 25 °C; typical values.

Reverse transmission coefficient s_{re}.

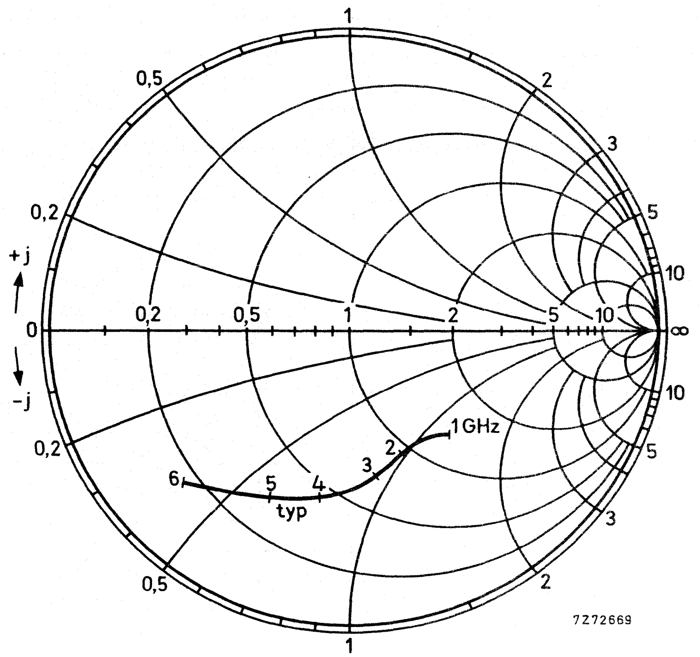

Fig. 8 V_{CE} = 10 V; I_C = 14 mA; T_{amb} = 25 °C; typical values.

Output impedance derived from output reflection coefficient s_{oe} co-ordinates in ohm x 50.

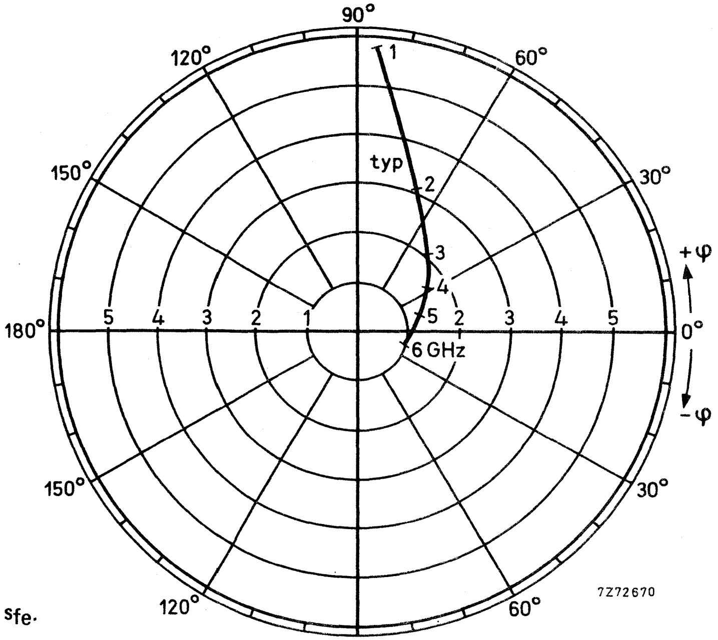

Fig. 9 V_{CE} = 10 V; I_C = 14 mA; T_{amb} = 25 °C; typical values.

Forward transmission coefficient s_{fe}.

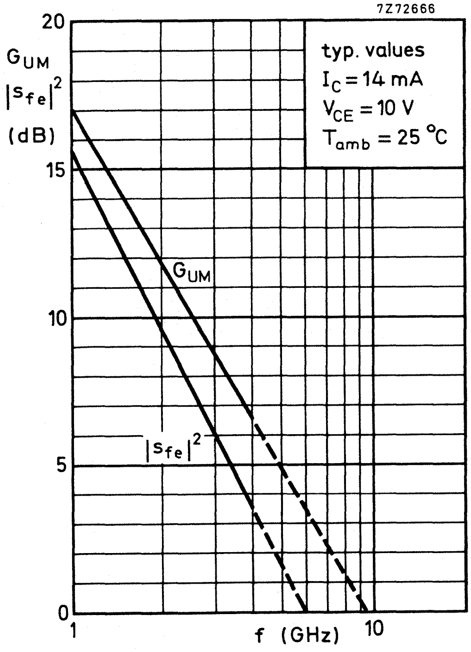

Fig. 10 $V_{CE} = 10$ V; $I_C = 14$ mA; $T_{amb} = 25$ °C; typical values.

N-P-N H.F. WIDEBAND TRANSISTOR

N-P-N multi-emitter transistor in a plastic SOT-23 envelope intended for application in thick and thin-film circuits. The transistor has very low intermodulation distortion and very high power gain. It is primarily intended for:

- Wideband vertical amplifiers in high speed oscilloscopes.
- Television distribution amplifiers.

QUICK REFERENCE DATA

Collector-base voltage (open emitter)	V_{CBO}	max.	18	V
Collector-emitter voltage (open base)	V_{CEO}	max.	10	V
Collector current (peak value; f > 1 MHz)	I_{CM}	max.	100	mA
Total power dissipation up to T_{amb} = 65 °C	P_{tot}	max.	250	mW
Junction temperature	T_j	max.	175	°C
Feedback capacitance at f = 1 MHz I_C = 2 mA; V_{CE} = 5 V	C_{re}	typ.	0,9	pF
Transition frequency at f = 500 MHz I_C = 25 mA; V_{CE} = 5 V	f_T	typ.	2,0	GHz
Max. unilateral power gain I_C = 30 mA; V_{CE} = 5 V; f = 200 MHz	G_{UM}	typ.	22	dB
I_C = 30 mA; V_{CE} = 5 V; f = 800 MHz	G_{UM}	typ.	10,5	dB
Intermodulation distortion at T_{amb} = 25 °C I_C = 30 mA; V_{CE} = 5 V; R_L = 37,5 Ω V_o = 100 mV at f_p = 183 MHz V_o = 100 mV at f_q = 200 MHz measured at $f_{(2q-p)}$ = 217 MHz	d_{im}	typ.	−60	dB

MECHANICAL DATA

Dimensions in mm

Fig. 1 SOT-23.

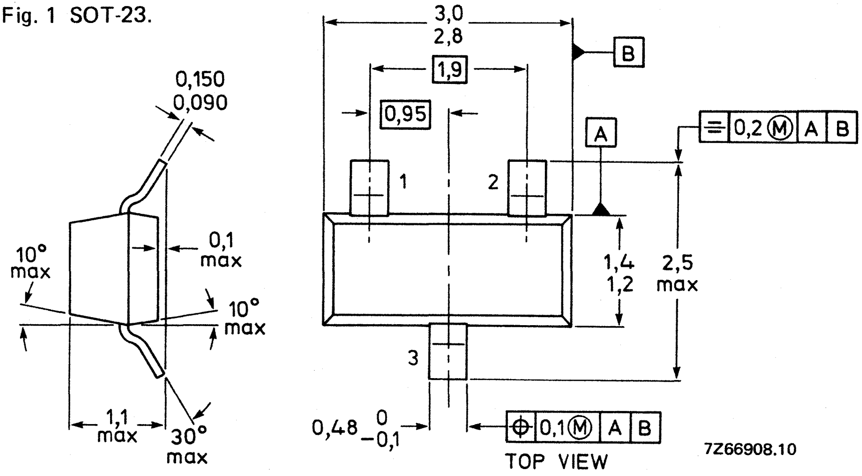

Marking code

BFR53 = N1

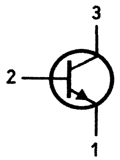

If required, the R-version (reverse pinning) is available on request.

RATINGS

Limiting values in accordance with the Absolute Maximum System (IEC 134)

Collector-base voltage (open emitter) see Fig. 3	V_{CBO}	max.	18	V
Collector-emitter voltage (open base) see Fig. 3	V_{CEO}	max.	10	V
Emitter-base voltage (open collector) see Fig. 3	V_{EBO}	max.	2,5	V
Collector current (d.c.)	I_C	max.	50	mA
Collector current (peak value: f > 1 MHz)	I_{CM}	max.	100	mA
Total power dissipation up to T_{amb} = 65 °C**	P_{tot}	max.	250	mW
Storage temperature	T_{stg}	−65 to	+175	°C
Junction temperature	T_j	max.	175	°C

→ THERMAL RESISTANCE *

From junction to ambient**	$R_{th\ j\text{-}a}$	=	430	K/W

CHARACTERISTICS

T_j = 25 °C unless otherwise specified

Collector cut-off current				
$I_E = 0$; $V_{CB} = 10$ V	I_{CBO}	max.	50	nA
→ D.C. current gain				
$I_C = 25$ mA; $V_{CE} = 5$ V	h_{FE}	min.	25	
$I_C = 50$ mA; $V_{CE} = 5$ V	h_{FE}	min.	25	
→ Transition frequency at f = 500 MHz				
$I_C = 25$ mA; $V_{CE} = 5$ V	f_T	typ.	2,0	GHz
Collector capacitance at f = 1 MHz				
$I_E = I_e = 0$; $V_{CB} = 5$ V	C_c	typ.	0,9	pF
Emitter capacitance at f = 1 MHz				
$I_C = I_c = 0$; $V_{EB} = 0,5$ V	C_e	typ.	1,5	pF
Feedback capacitance at f = 1 MHz				
$I_C = 2$ mA; $V_{CE} = 5$ V; $T_{amb} = 25$ °C	C_{re}	typ.	0,9	pF

→ * See *Thermal characteristics.*

** Mounted on a ceramic substrate of 8 mm x 10 mm x 0,7 mm.

Noise figure at f = 500 MHz ▲

I_C = 2 mA; V_{CE} = 5 V; T_{amb} = 25 °C G_S = 20 mS; B_S is tuned	F	max.	5,0 dB

Max. unilateral power gain (s_{re} assumed to be zero)

$$G_{UM} = 10 \log \frac{|s_{fe}|^2}{[1-|s_{ie}|^2]\,[1-|s_{oe}|^2]}$$

I_C = 30 mA; V_{CE} = 5 V; f = 200 MHz; T_{amb} = 25 °C	G_{UM}	typ.	22 dB
I_C = 30 mA; V_{CE} = 5 V; f = 800 MHz; T_{amb} = 25 °C	G_{UM}	typ.	10,5 dB

Intermodulation distortion ▲

I_C = 30 mA; V_{CE} = 5 V; R_L = 37,5 Ω

V_o = 100 mV at f_p = 183 MHz

V_o = 100 mV at f_q = 200 MHz

measured at $f_{(2q-p)}$ = 217 MHz	d_{im}	typ.	−60 dB

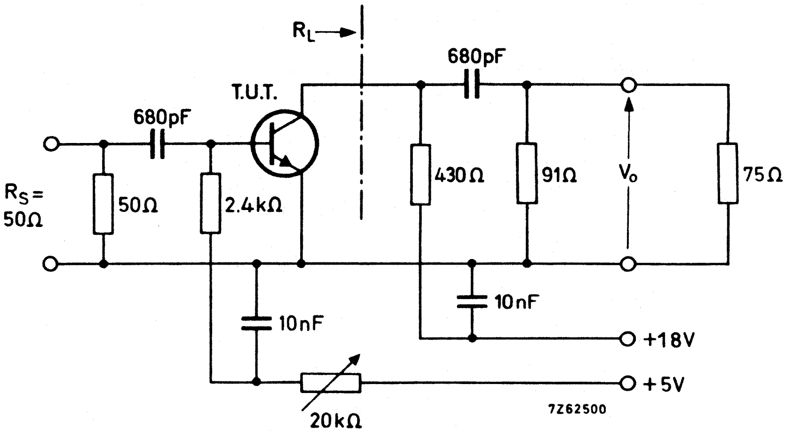

Fig. 2 Test circuit.

▲ Crystal mounted in a BFW30 envelope.

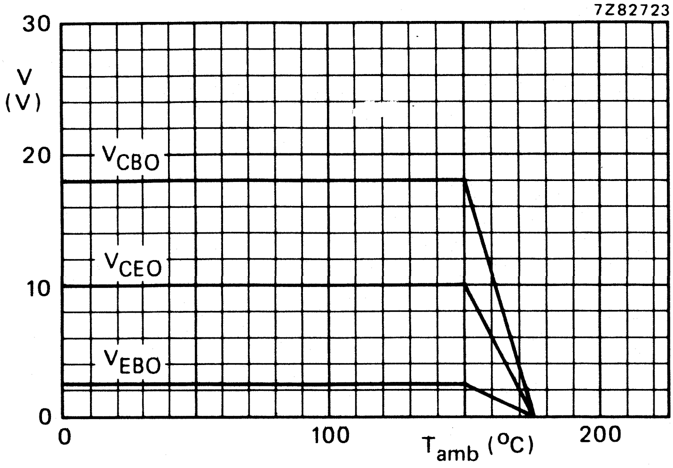

Fig. 3 Voltage derating curves.

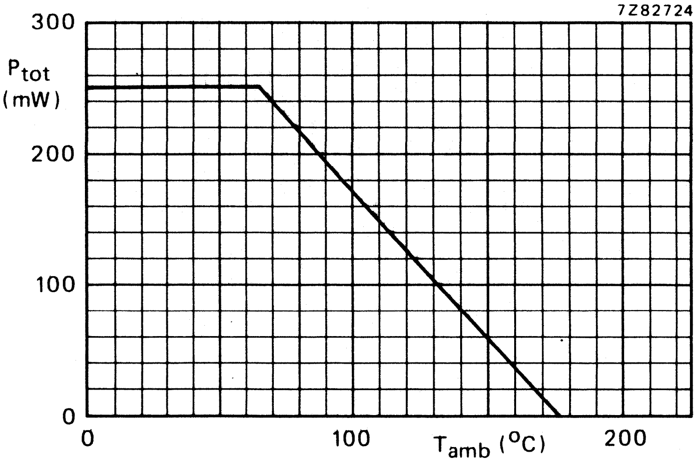

Fig. 4 Power derating curve.

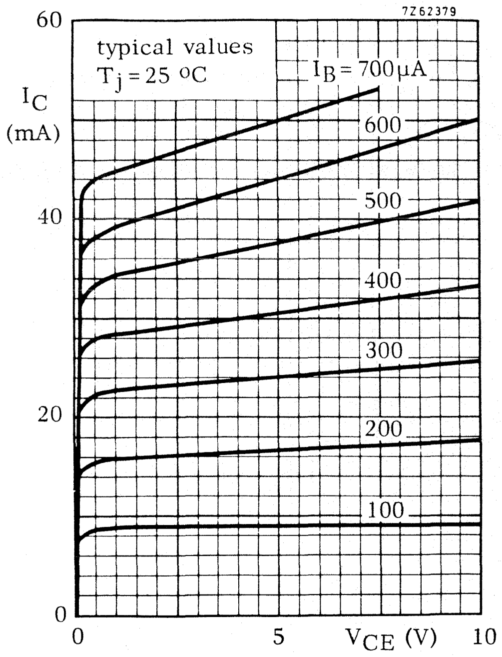

Fig. 5 $T_j = 25$ °C; typical values.

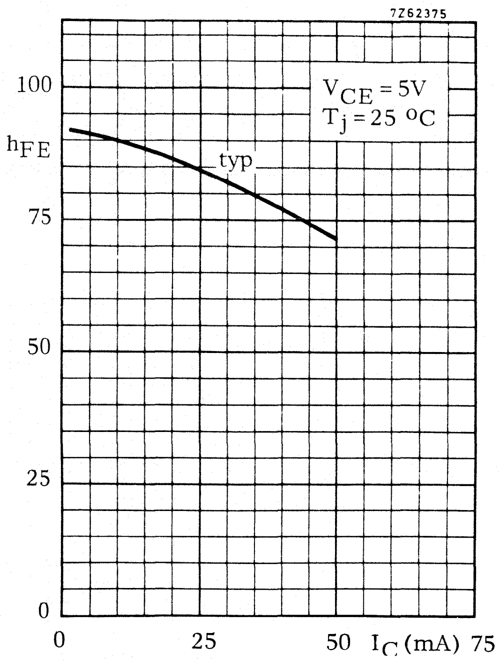

Fig. 6 $V_{CE} = 5$ V; $T_j = 25$ °C; typical values.

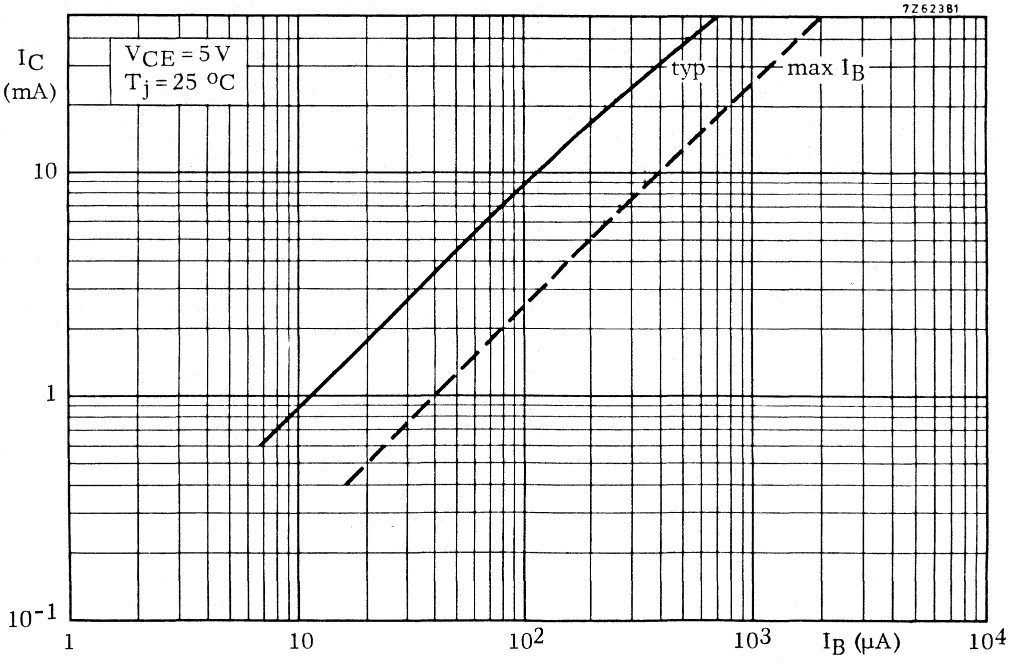

Fig. 7 $V_{CE} = 5$ V; $T_j = 25$ °C.

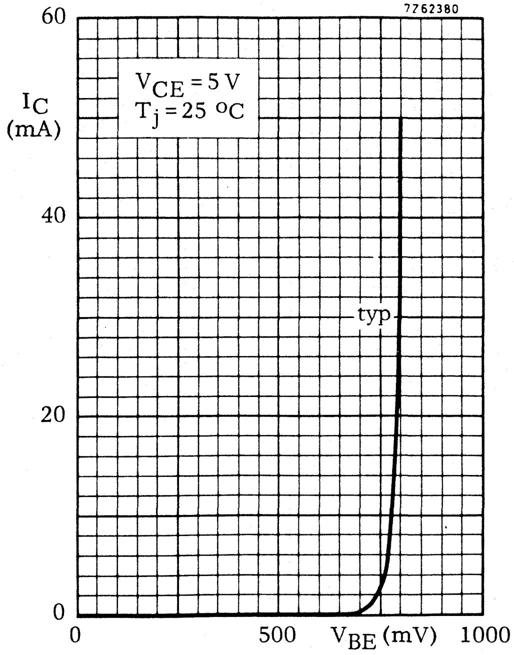

Fig. 8 $V_{CE} = 5$ V; $T_j = 25$ °C; typical values.

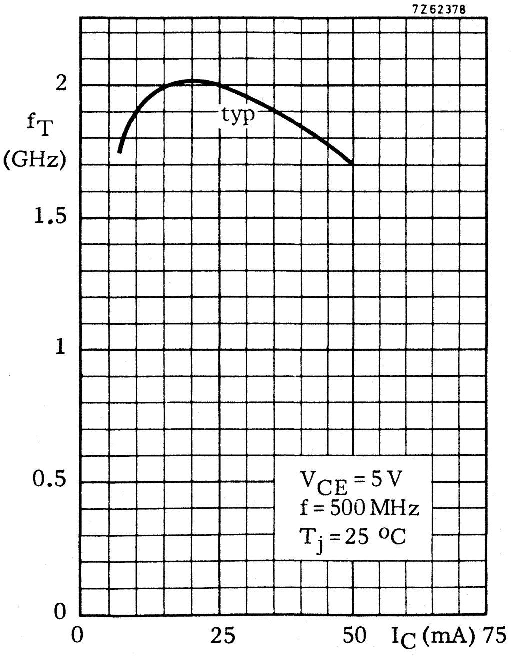

Fig. 9 $V_{CE} = 5$ V; f = 500 MHz; $T_j = 25$ °C; typical values.

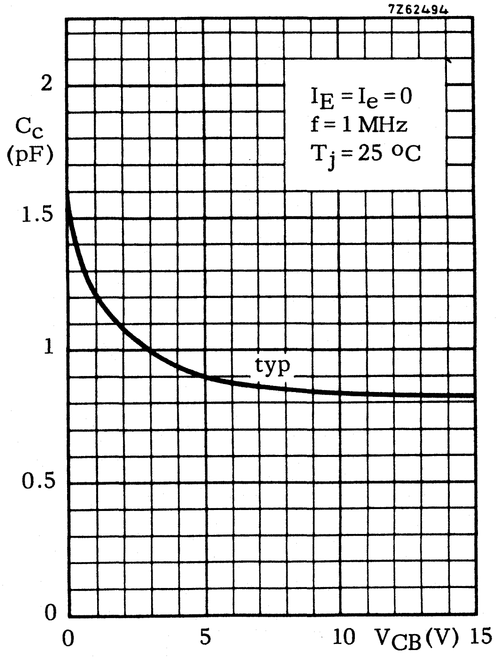

Fig. 10 $I_E = i_e = 0$; f = 1 MHz; $T_j = 25$ °C; typical values.

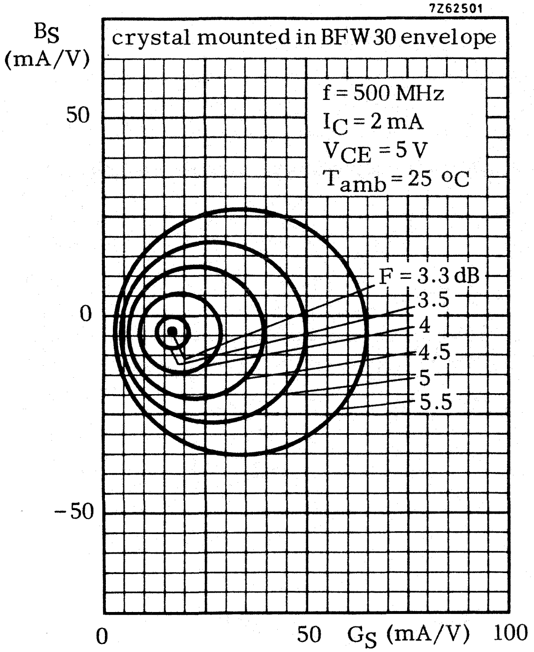

Fig. 11 Circles of constant noise figure; V_{CE} = 5 V; I_C = 2 mA; f = 500 MHz; T_{amb} = 25 °C; typ. values.

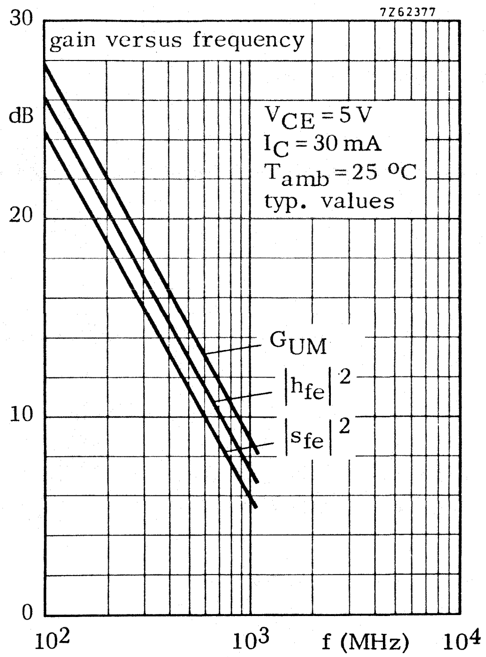

Fig. 12 V_{CE} = 5 V; I_C = 30 mA; T_{amb} = 25 °C; typical values.

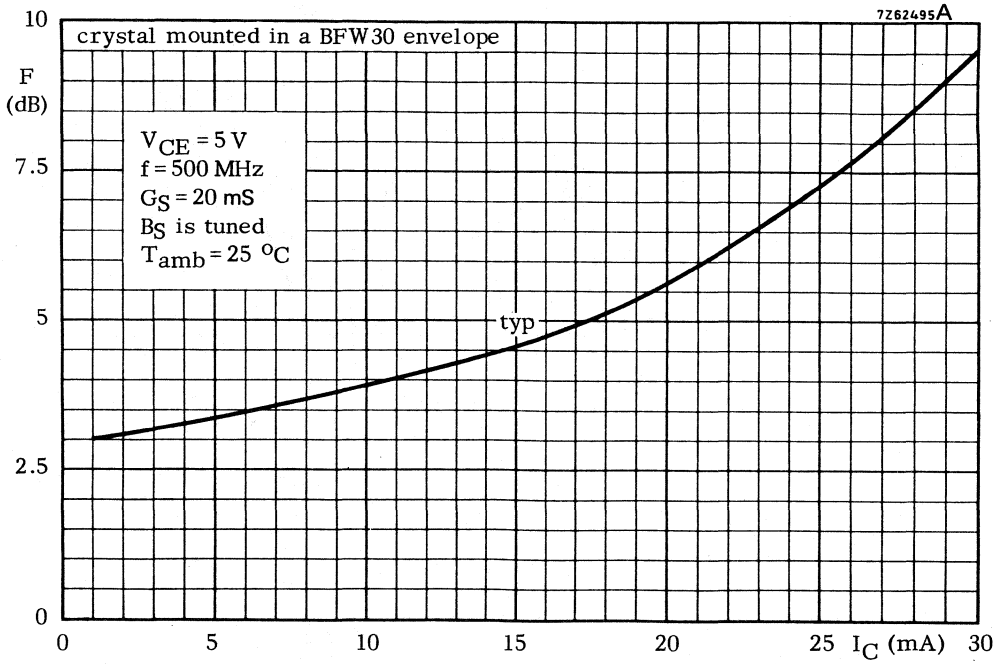

Fig. 13 V_{CE} = 5 V; f = 500 MHz; G_S = 20 mS; B_S = tuned; T_{amb} = 25 °C; typical values.

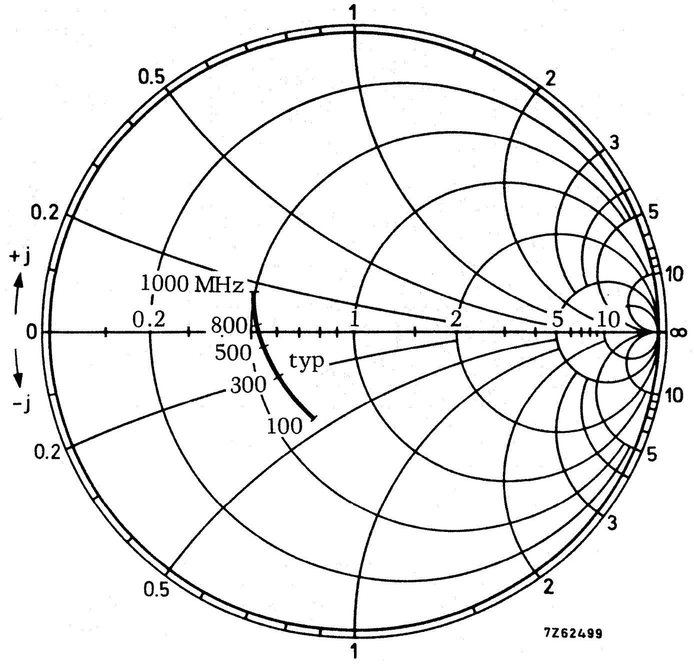

Fig. 14 V_{CE} = 5 V; I_C = 30 mA; T_{amb} = 25 °C; typical values.

Input impedance derived from input reflection coefficient s_{ie} coordinates in ohm x 50.

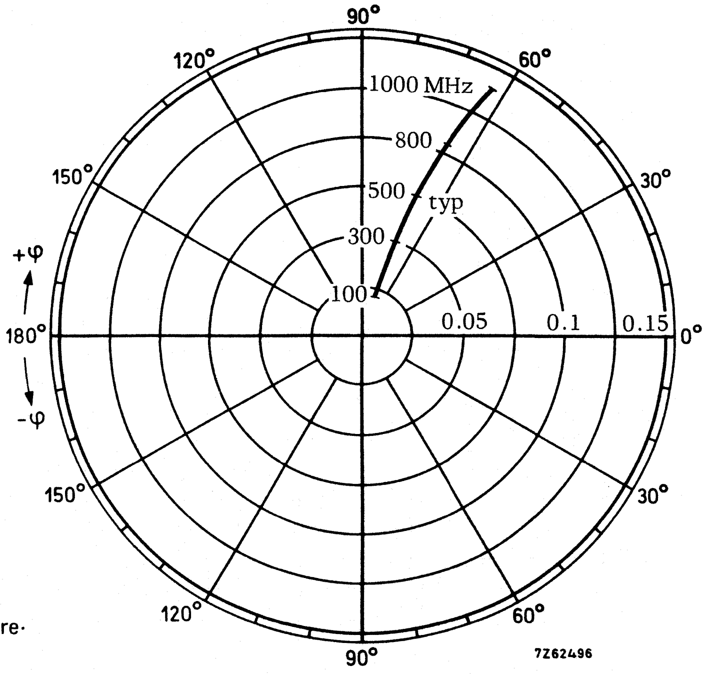

Fig. 15 V_{CE} = 5 V; I_C = 30 mA; T_{amb} = 25 °C; typical values.

Reverse transmission coefficient s_{re}.

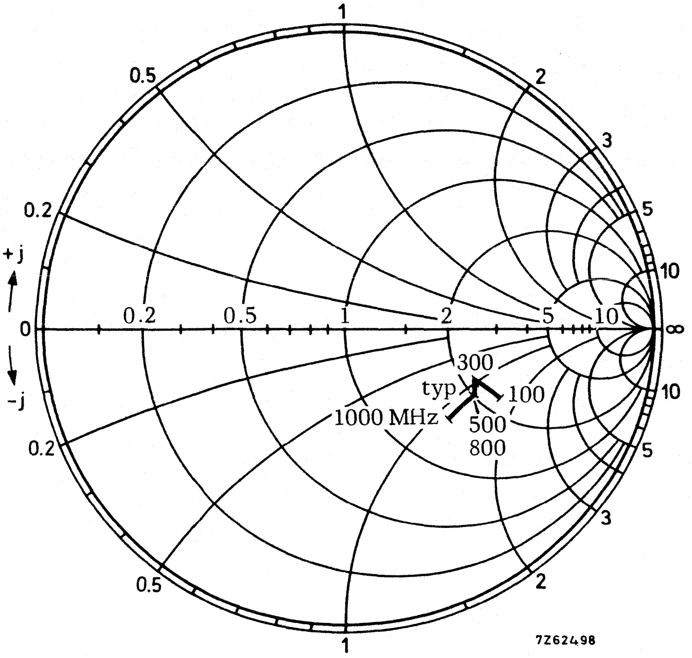

Fig. 16 $V_{CE} = 5$ V; $I_C = 30$ mA; $T_{amb} = 25$ °C; typical values.

Output impedance derived from output reflection coefficient s_{oe} coordinates in ohm x 50.

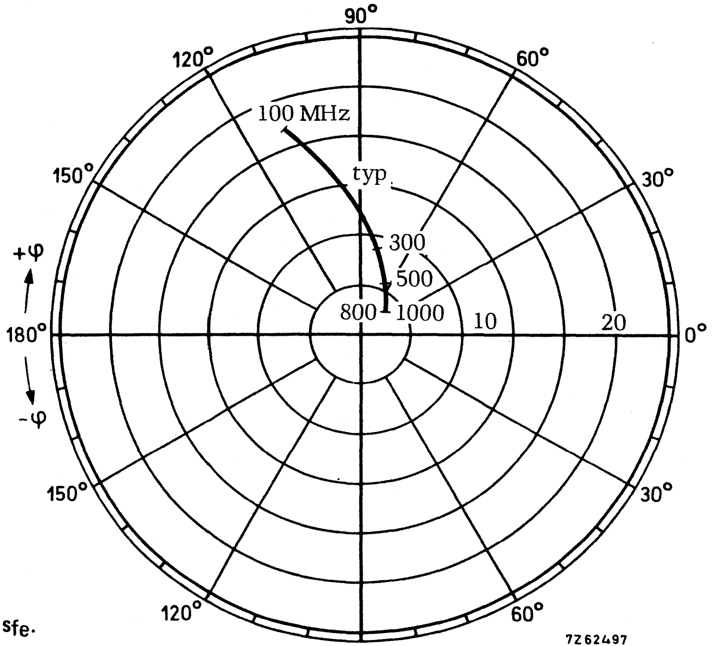

Fig. 17 $V_{CE} = 5$ V; $I_C = 30$ mA; $T_{amb} = 25$ °C; typical values.

Forward transmission coefficient s_{fe}.

N-P-N H.F. WIDEBAND TRANSISTOR ←

N-P-N multi-emitter transistor in a capstan envelope. The transistor has extremely good intermodulation properties and high power gain.

The device is primarily intended for:

- Final and driver stages of channel and band aerial amplifiers with high output power for band I, II, III and IV/V (40-860 MHz).
- Final and driver stages of wideband amplifiers (40-230 MHz).
- Final stages of the wideband vertical amplifier in high-speed oscilloscopes.
- Frequency multiplier and oscillator circuits.

QUICK REFERENCE DATA

Collector-base voltage (open emitter; peak value)	V_{CBOM}	max.	40	V
Collector-emitter voltage (open base)	V_{CEO}	max.	25	V
Collector current (peak value)	I_{CM}	max.	500	mA
Total power dissipation up to T_{mb} = 60 °C; f ≥ 1 MHz	P_{tot}	max.	3,5	W
Junction temperature	T_j	max.	150	°C
Transition frequency at f = 500 MHz I_C = 75 mA; V_{CE} = 20 V	f_T	min.	1200	MHz
Output power at f = 200 MHz I_C = 70 mA; V_{CE} = 20 V; d_{im} = –30 dB	P_o	typ.	150	mW
Power gain at f = 200 MHz I_C = 70 mA; V_{CE} = 20 V	G_p	typ.	16	dB

MECHANICAL DATA (see next page)

PRODUCT SAFETY. This device incorporates beryllium oxide, the dust of which is toxic. The device is entirely safe provided that the BeO disc is not damaged.

MECHANICAL DATA

Dimensions in mm

Fig. 1 SOT-48.

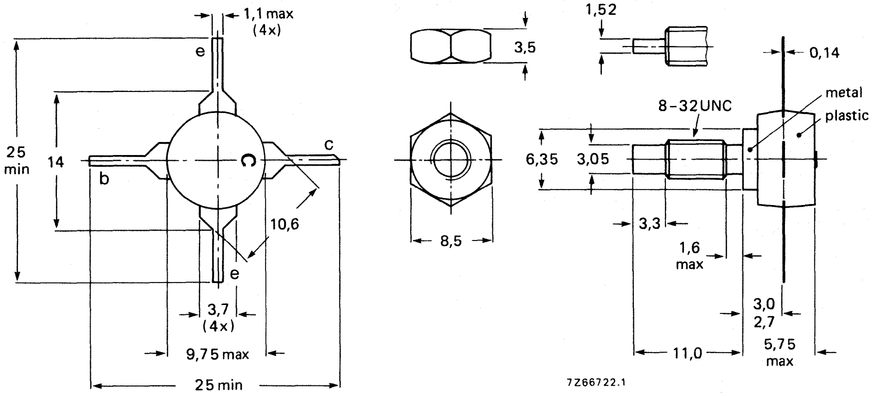

When locking is required an adhesive instead of a lock washer is preferred.

Torque on nut:	min.	0,75 Nm (7,5 kg cm)	Diameter of clearance hole in heatsink: max. 4,17 mm. Mounting hole to have no burrs at either end.
	max.	0,85 Nm (8,5 kg cm)	De-burring must leave surface flat; do not chamfer or countersink either end of hole.

RATINGS

Limiting values in accordance with the Absolute Maximum System (IEC 134)

Collector-base voltage (open emitter; peak value)	V_{CBOM}	max.	40	V	1)
Collector-emitter voltage (R_{BE} = 10 Ω; peak value)	V_{CERM}	max.	40	V	2)
Collector-emitter voltage (open base)	V_{CEO}	max.	25	V	2)
Emitter-base voltage (open collector)	V_{EBO}	max.	3,5	V	3)
Collector current (d.c.)	I_C	max.	200	mA	
Collector current (peak value) f > 1 MHz	I_{CM}	max.	500	mA	
Power dissipation (f > 1 MHz; see SOAR)					
Total power dissipation up to T_{mb} = 60 °C	P_{tot}	max.	3,5	W	
Storage temperature	T_{stg}		−40 to +150	°C	
Junction temperature	T_j	max.	150	°C	

THERMAL RESISTANCE

From junction to mounting base	$R_{th\ j\text{-}mb}$	=	25	K/W
From mounting base to heatsink	$R_{th\ mb\text{-}h}$	=	0,5	K/W

---

1) at I_C = 100 μA.
2) at I_C = 10 mA.
3) at I_E = 100 μA.

CHARACTERISTICS

T_j = 25 °C unless otherwise specified

Collector cut-off current $I_E = 0$; $V_{CB} = 20$ V	I_{CBO}	max.	10 µA
Saturation voltage $I_C = 100$ mA; $I_B = 10$ mA	V_{CEsat}	max.	0,75 V
D.C. current gain $I_C = 50$ mA; $V_{CE} = 5$ V	h_{FE}	min.	25
$I_C = 150$ mA; $V_{CE} = 5$ V	h_{FE}	min.	25
Collector capacitance at f = 1 MHz $I_E = I_e = 0$; $V_{CB} = 20$ V	C_c	max.	4,5 pF
Feedback capacitance at f = 1 MHz $I_C = 10$ mA; $V_{CE} = 20$ V; $T_{mb} = 25$ °C	C_{re}	typ.	1,7 pF
Noise figure at f = 200 MHz $I_C = 40$ mA; $V_{CE} = 20$ V; $R_S = 75\ \Omega$; $T_{mb} = 25$ °C	F	typ.	6 dB
Transition frequency at f = 500 MHz $I_C = 15$ mA; $V_{CE} = 20$ V	f_T	typ.	1000 MHz
$I_C = 75$ mA; $V_{CE} = 20$ V	f_T	min.	1200 MHz
$I_C = 150$ mA; $V_{CE} = 20$ V	f_T	typ.	1200 MHz
Output power at f = 200 MHz; $T_{mb} = 25$ °C $I_C = 70$ mA; $V_{CE} = 20$ V; VSWR at output < 2 $f_p = 202$ MHz; $f_q = 205$ MHz; $d_{im} = -30$ dB measured at $f_{(2q-p)} = 208$ MHz (channel 9)	P_o	min. typ.	130 mW 150 mW
Output power at f = 800 MHz; $T_{mb} = 25$ °C $I_C = 70$ mA; $V_{CE} = 20$ V; VSWR at output < 2 $f_p = 798$ MHz; $f_q = 802$ MHz; $d_{im} = -30$ dB measured at $f_{(2q-p)} = 806$ MHz (channel 62)	P_o	min. typ.	70 mW 90 mW
Power gain (not neutralized) $T_{mb} = 25$ °C $I_C = 70$ mA; $V_{CE} = 20$ V; f = 200 MHz	G_p	min. typ.	15 dB 16 dB
$I_C = 70$ mA; $V_{CE} = 20$ V; f = 800 MHz	G_p	typ.	6,5 dB

CHARACTERISTICS (continued)

Intermodulation characteristics

1. Output power at f = 200 MHz; T_{mb} = 25 °C
   I_C = 70 mA; V_{CE} = 20 V; VSWR at output < 2
   f_p = 202 MHz; f_q = 205 MHz; d_{im} = −30 dB
   measured at $f_{(2q-p)}$ = 208 MHz (channel 9)

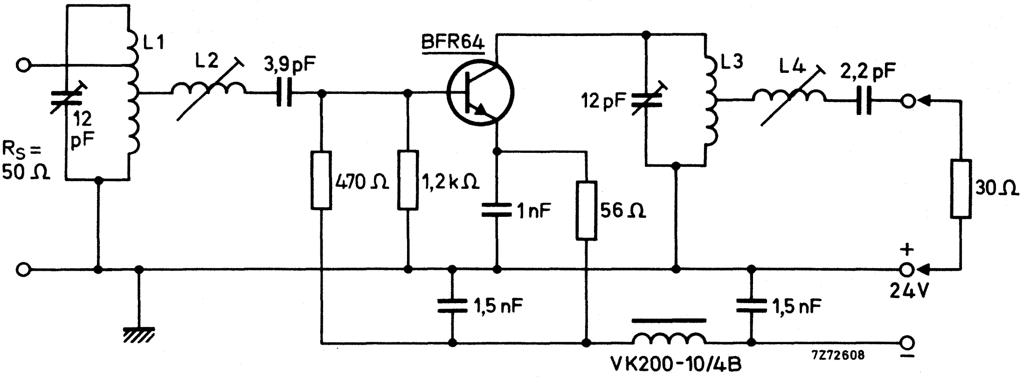

Fig. 2.

Coil data:

L1 = 3 turns silver-plated Cu wire (1,4 mm); winding pitch 2,7 mm; int. dia. 8 mm; taps at 0,5 turn and 1,5 turns from earth.
L2 = 5,5 turns silver-plated Cu wire (1,4 mm); winding pitch 2,2 mm; int. dia. 8 mm
L3 = 3 turns silver-plated Cu wire (1,4 mm); winding pitch 3,3 mm; int. dia. 8 mm
L4 = 5,5 turns silver-plated Cu wire (1,4 mm); winding pitch 2,2 mm; int. dia. 11 mm

Basis of adjustment

The intermodulation at an intermodulation distortion of −30 dB is caused by h.f. output current-voltage clipping.
The maximum undistorted output power is realized, if

a. Current and voltage clipping take place concurrently.
   This occurs if

$$R_L = \frac{V_{CE} - V_{CEK}}{I_C},$$

   in which V_{CEK} is the high-frequency knee voltage.

b. The h.f. collector current is as small as possible.
   This is so if $-C_L = +C_{oe}$,
   in which C_{oe} is the output capacitance of the transistor at short-circuited input.

For maximum output power at an intermodulation distortion of −30 dB, the (experimentally found) values of R_L and C_L are:
R_L = 220 Ω; C_L = −4 pF.

Adjustment procedure

1. Remove the transistor and connect a dummy consisting of a 220 Ω resistor in parallel with a 4 pF capacitor between the collector and emitter connections of the output circuit.
2. Tune and match the output circuit for zero reflection at 205 MHz (VSWR = 1).
   After this adjustment, no further change may be made in the output circuit.
3. Replace the dummy by the transistor. Tune and match the input circuit for maximum power gain and good band-pass curve.
   The VSWR of the output will then, in most cases, be $\leqslant 2$ over the whole channel. Corrections can be made by tuning L2; this will not disturb the band-pass curve.

Intermodulation characteristics

2. Output power at f = 800 MHz; T_{mb} = 25 °C
   I_C = 70 mA; V_{CE} = 20 V; VSWR at output < 2
   f_p = 798 MHz; f_q = 802 MHz; d_{im} = −30 dB
   measured at $f_{(2q-p)}$ = 806 MHz (channel 62)

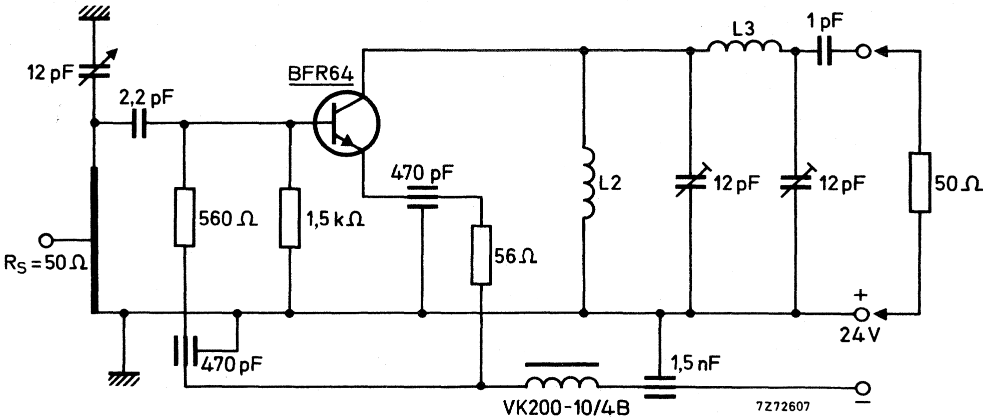

Fig. 3 Test circuit.

Coil data:

L1 = 25 mm x 7 mm x 0,85 mm silver-plated Cu strip
Tap of the input at 5 mm from earth.
L2 = 13 turns enamelled Cu wire (0,6 mm); int. dia. 8 mm
L3 = 1,5 turns Cu wire (1,3 mm); int. dia. 8 mm

CHARACTERISTICS (continued)

Basis of adjustment

At 800 MHz no dummy can be used to adjust for optimum collector load because at these frequencies the impedance transformations of a dummy are too high. A small signal at the mid-channel frequency of 802 MHz is fed to the input and increased until clipping occurs; that is, until the output power no longer increases linearily with the input signal. This clipping can be eliminated by tuning the output circuit, thereby making the output power equal to

$$P_o = \frac{I_C(V_{CE} - V_{CEK})}{2} = 480\ \text{mW}.$$

The output circuit is adjusted for minimum intermodulation if the input signal is as small as possible at P_o = 480 mW. With this adjusting method, care must be taken that the transistor is not damaged by second breakdown (the voltage swing may not exceed the rated V_{CER} value). Therefore as soos as clipping occurs, the increase of the input signal should be stopped until the clipping has been eliminated. After this adjustment has been made no further change may be made in the output circuit. Adjust the input circuit for maximum power gain and good band-pass curve. The VSWR of the output is then $\leqslant 2$ over the whole channel.

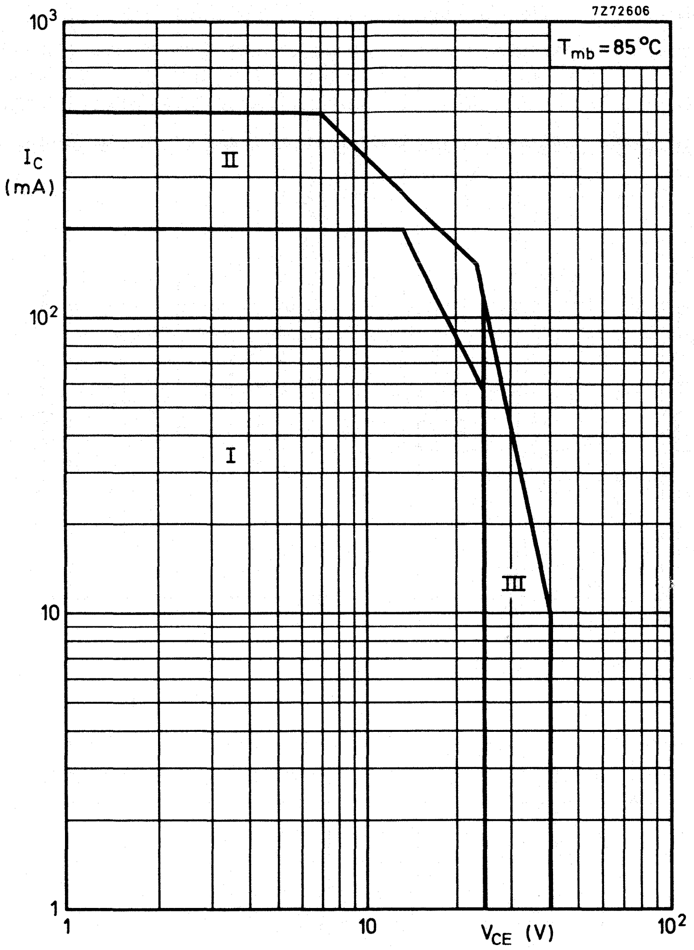

Fig. 4 Safe Operating ARea with the transistor forward biased.

- I Region of permissible d.c. operation
- II Permissible extension for repetitive pulsed operation; f > 1 MHz
- III Repetitive pulse operation in this region is allowable; provided $R_{BE} < 10\,\Omega$ and f > 1 MHz

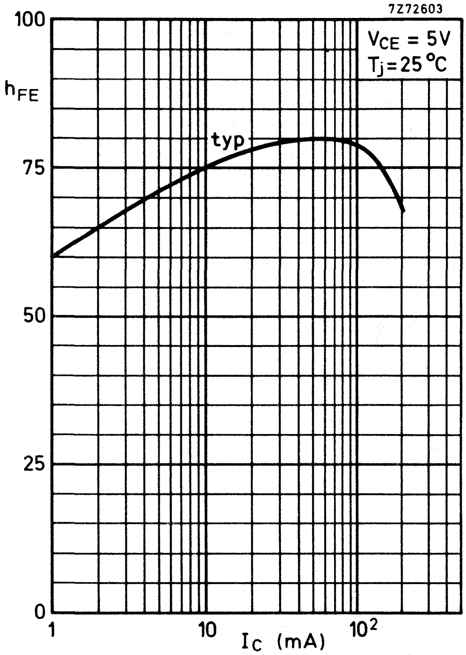

Fig. 5 V_{CE} = 5 V; T_j = 25 °C; typical values.

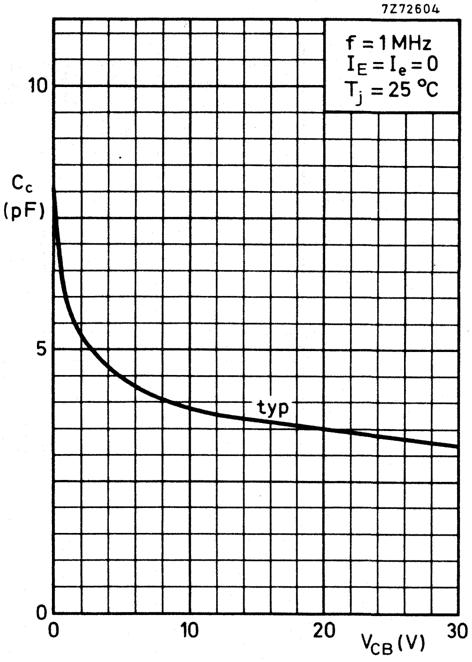

Fig. 6 $I_E = i_e = 0$; T_j = 25 °C; typical values.

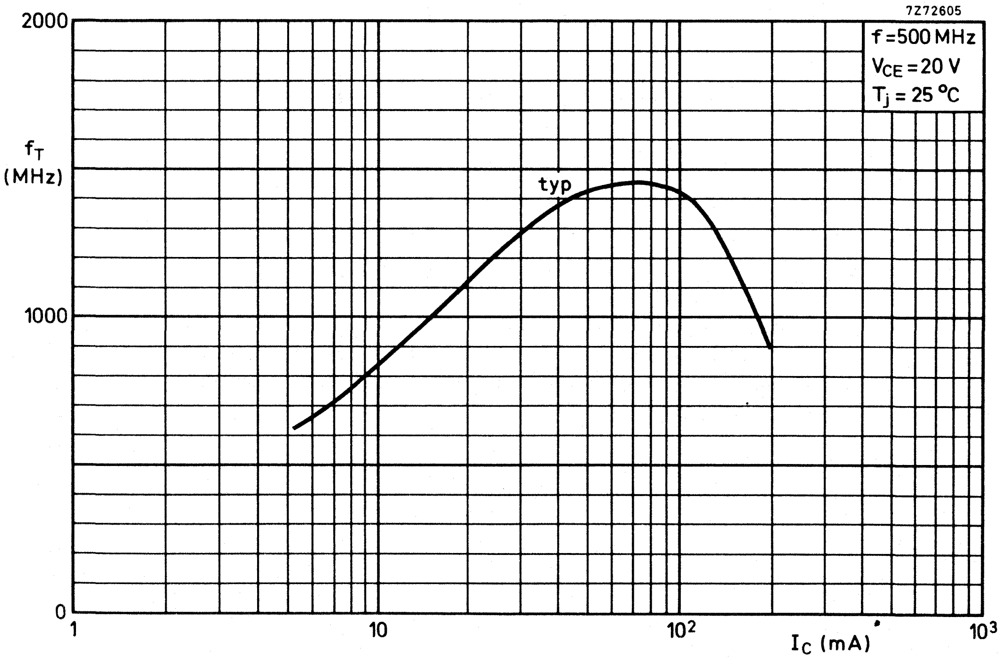

Fig. 7 V_{CE} = 5 V; f = 500 MHz; T_j = 25 °C; typical values.

N-P-N H.F. WIDEBAND TRANSISTOR

N-P-N multi-emitter silicon transistor in a capstan envelope. The transistor has extremely good intermodulation properties and high power gain.

The device is primarily intended for channel amplifiers in aerial amplifier systems as well as other applications where an excellent f_T linearity and higher signal handling capabilities than available in existing devices are required.

QUICK REFERENCE DATA

Collector-base voltage (open emitter; peak value)	V_{CBOM}	max.	40	V
Collector-emitter voltage (open base)	V_{CEO}	max.	25	V
Collector current (peak value)	I_{CM}	max.	1000	mA
Junction temperature	T_j	max.	200	°C
Transition frequency at f = 500 MHz I_C = 200 mA; V_{CE} = 20 V	f_T	min.	1200	MHz
Output power at f = 200 MHz I_C = 200 mA; V_{CE} = 20 V; d_{im} = −30 dB	P_o	typ.	450	mW
Power gain at f = 200 MHz I_C = 200 mA; V_{CE} = 20 V	G_p	typ.	19	dB

MECHANICAL DATA (see next page)

PRODUCT SAFETY. This device incorporates beryllium oxide, the dust of which is toxic. The device is entirely safe provided that the BeO disc is not damaged.

MECHANICAL DATA

Fig. 1 SOT-48.

Dimensions in mm

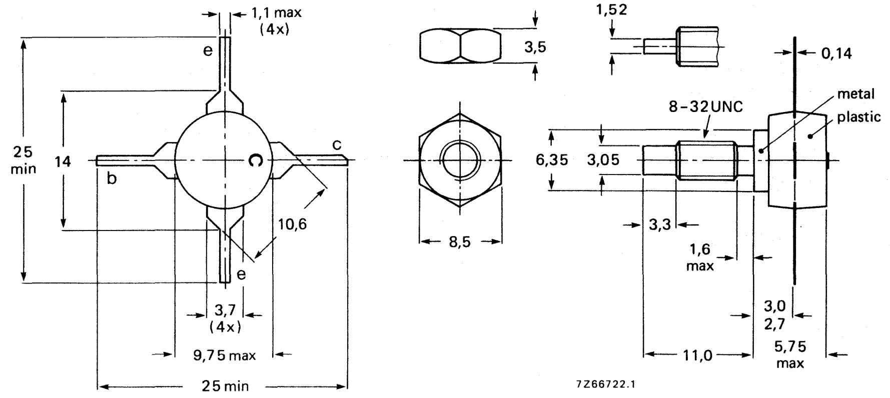

When locking is required an adhesive instead of a lock washer is preferred.

Torque on nut: min. 0,75 Nm
(7,5 kg cm)
0,85 Nm
(8,5 kg cm)

Diameter of clearance hole in heatsink: max. 4,17 mm. Mounting hole to have no burrs at either end. De-burring must leave surface flat; do not chamfer or countersink either end of hole.

RATINGS

Limiting values in accordance with the Absolute Maximum System (IEC 134)

Collector-base voltage (open emitter; peak value)	V_{CBOM}	max.	40	V
Collector-emitter voltage (R_{BE} = 10 Ω; peak value)	V_{CERM}	max.	40	V
Collector-emitter voltage (open base)	V_{CEO}	max.	25	V
Emitter-base voltage (open collector)	V_{EBO}	max.	3,5	V
Collector current (d.c.)	I_C	max.	400	mA
Collector current (peak value) $f > 1$ MHz	I_{CM}	max.	1000	mA
Total power dissipation up to T_{mb} = 125 °C	P_{tot}	max.	5	W
Storage temperature	T_{stg}		−65 to +200	°C
Junction temperature	T_j	max.	200	°C

THERMAL RESISTANCE

From junction to mounting base	$R_{th\ j\text{-}mb}$	=	15	K/W
From mounting base to heatsink	$R_{th\ mb\text{-}h}$	=	0,5	K/W

CHARACTERISTICS

T_j = 25 °C unless otherwise specified

Collector-base breakdown voltage open emitter, I_C = 1 mA	$V_{(BR)CBO}$	min.	40	V
Collector-emitter breakdown voltage R_{BE} = 10 Ω, I_C = 5 mA	$V_{(BR)CER}$	min.	40	V
open base, I_C = 5 mA	$V_{(BR)CEO}$	min.	25	V
Emitter-base breakdown voltage open collector; I_E = 1 mA	$V_{(BR)EBO}$	min.	3,5	V
Collector cut-off current $I_E = 0$; V_{CB} = 20 V	I_{CBO}	max.	100	μA
Saturation voltage I_C = 200 mA; I_B = 20 mA	V_{CEsat}	max.	0,75	V
D.C. current gain I_C = 200 mA; V_{CE} = 20 V	h_{FE}	min.	30	
I_C = 400 mA; V_{CE} = 20 V	h_{FE}	min.	20	
Collector capacitance at f = 1 MHz $I_E = I_e = 0$; V_{CB} = 20 V	C_c	max.	10	pF
Feedback capacitance at f = 1 MHz I_C = 10 mA; V_{CE} = 20 V; T_{mb} = 25 °C	C_{re}	typ.	3,5	pF
Collector-stud capacitance	C_{cs}	typ.	2	pF
Transition frequency at f = 500 MHz I_C = 200 mA; V_{CE} = 20 V	f_T	min.	1200	MHz
I_C = 400 mA; V_{CE} = 20 V	f_T	min.	1000	MHz
Output power at f = 200 MHz; T_{mb} = 25 °C I_C = 200 mA; V_{CE} = 20 V; VSWR at output < 2 f_p = 202 MHz; f_q = 205 MHz; d_{im} = −30 dB measured at $f_{(2q-p)}$ = 208 MHz (channel 9)	P_o	typ.	450	mW
Power gain (not neutralized) T_{mb} = 25 °C I_C = 200 mA; V_{CE} = 20 V; f = 200 MHz	G_p	min. typ.	15 19	dB dB
I_C = 200 mA; V_{CE} = 20 V; f = 800 MHz	G_p	typ.	4,5	dB

CHARACTERISTICS (continued)

Intermodulation characteristics

1. Output power at f = 200 MHz; T_{mb} = 25 °C
   I_C = 200 mA; V_{CE} = 20 V; VSWR at output < 2
   f_p = 202 MHz; f_q = 205 MHz; d_{im} = −30 dB
   measured at $f_{(2q-p)}$ = 208 MHz (channel 9)

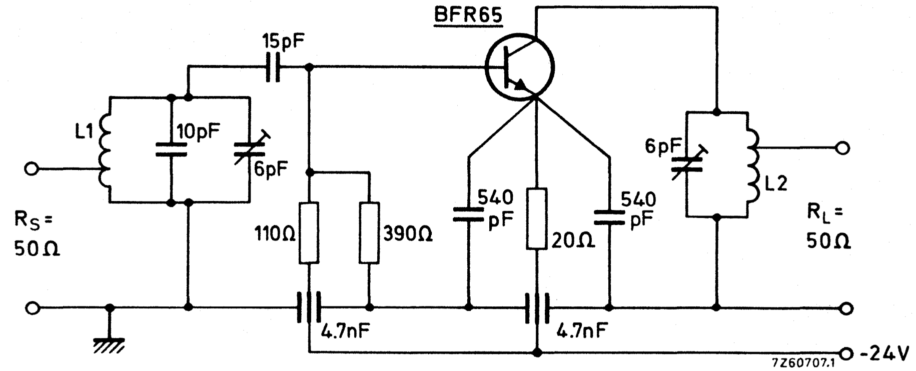

Fig. 2.

Coil data:

L1 = 1 turn silver plated Cu wire (1,4 mm); int. diam. 8 mm; tap at 0,75 turn from earth.
L2 = 3 turns silver plated Cu wire (1,4 mm); int. diam. 8 mm; winding pitch 2,7 mm; tap at 2,5 turns from earth.

Basis of adjustment

The intermodulation at an intermodulation distortion of −30 dB is caused by h.f. output current — voltage clipping.
The maximum undistorted output power is realised, if

a. Current and voltage clipping take place concurrently.
   This occurs if

$$R_L = \frac{V_{CE} - V_{CEK}}{I_C},$$

   in which V_{CEK} is the high frequency knee voltage.

b. The h.f. collector current is as small as possible.
   This is so if $-C_L = +C_{oe}$,
   in which C_{oe} is the output capacitance of the transistor at short-circuited input.

For maximum output power at an intermodulation distortion of −30 dB, the (experimentally found) values of R_L and C_L are:
R_L = 91 Ω; C_L = −6,8 pF.

Adjustment procedure

1. Remove the transistor and connect a dummy consisting of a 91 Ω resistor in parallel with a 6,8 pF capacitor between the collector and emitter connections of the output circuit.
2. Tune and match the output circuit for zero reflection at 205 MHz (VSWR = 1). After this adjustment, no further change may be made in the output circuit.
3. Replace the dummy by the transistor. Tune and match the input circuit for maximum power gain and good band pass curve.
   The VSWR of the output will then, in most cases, be ≤ 2 over the whole channel.

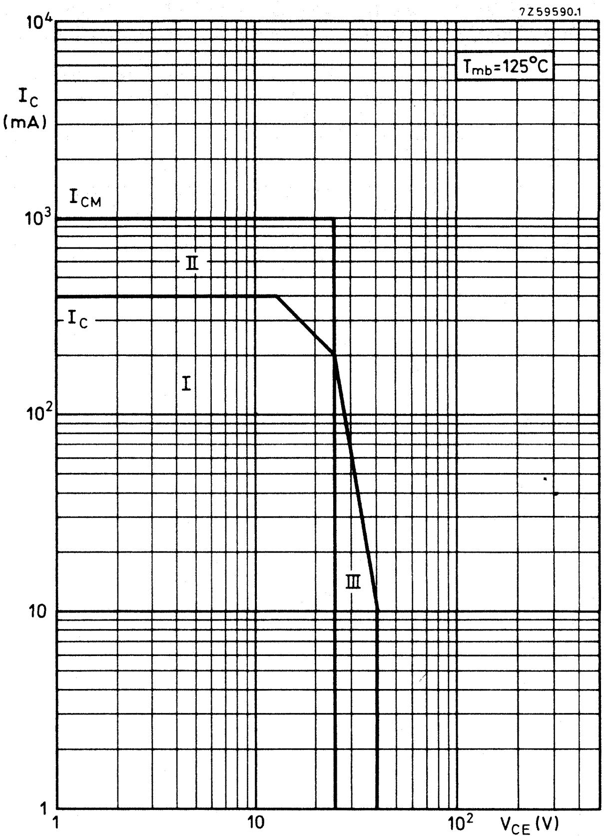

Fig. 3 Safe Operating ARea with the transistor forward biased; T_{mb} = 125 °C.

I Region of permissible d.c. operation
II Permissible extension for repetitive pulsed operation; $f > 1$ MHz
III Repetitive pulsed operation in this region is allowable, provided $f > 1$ MHz; $R_{BE} < 10\,\Omega$

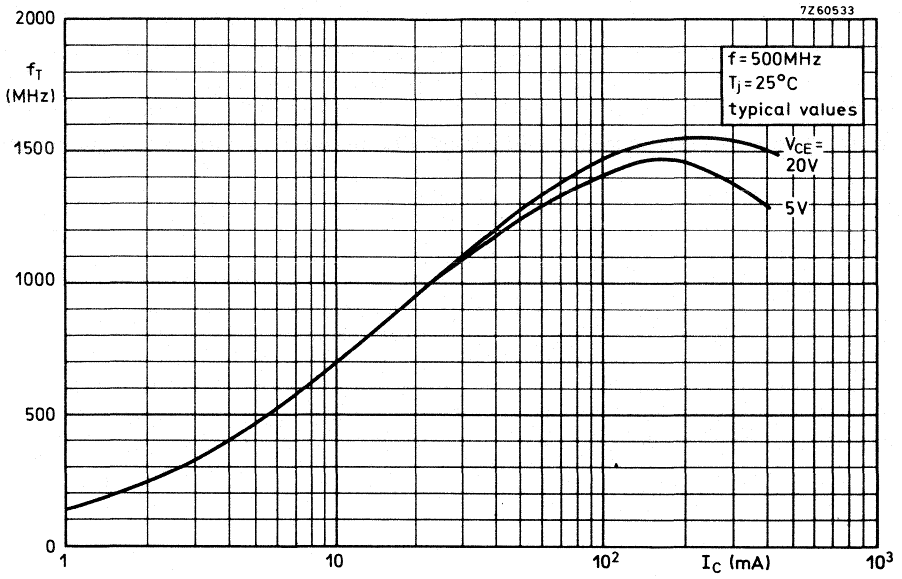

Fig. 4 f = 500 MHz; T_j = 25 °C; typical values.

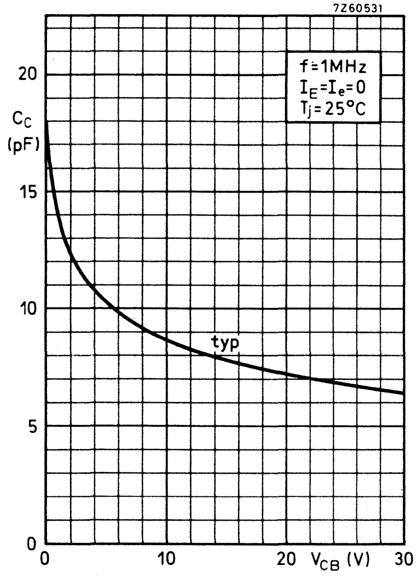

Fig. 5 $I_E = i_e = 0$; f = 1 MHz; T_j = 25 °C; typical values.

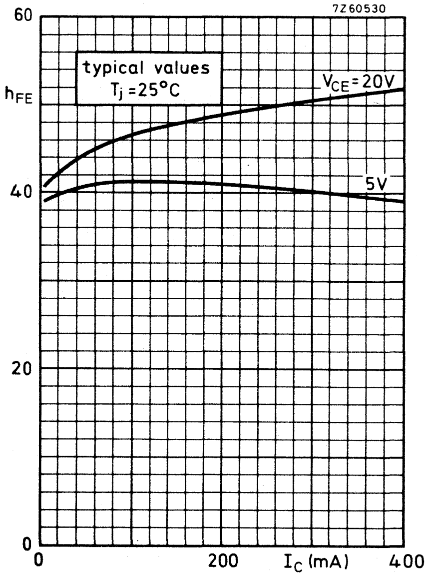

Fig. 6 T_j = 25 °C; typical values.

N-P-N 1 GHz WIDEBAND TRANSISTOR

N-P-N transistor in a plastic SOT-37 envelope. It is primarily intended for use in u.h.f. and microwave amplifiers such as in aerial amplifiers, radar systems, oscilloscopes, spectrum analysers etc.

The transistor features low intermodulation distortion and high power gain; thanks to its very high transition frequency, it also has excellent wideband properties and low noise up to high frequencies.

P-N-P complement is BFQ51.

QUICK REFERENCE DATA

Collector-base voltage (open emitter)	V_{CBO}	max.	20	V
Collector-emitter voltage (open base)	V_{CEO}	max.	15	V
Collector current (d.c.)	I_C	max.	25	mA
Total power dissipation up to T_{amb} = 60 °C	P_{tot}	max.	180	mW
Junction temperature	T_j	max.	150	°C
Transition frequency at f = 500 MHz I_C = 14 mA; V_{CE} = 10 V	f_T	typ.	5,0	GHz
Feedback capacitance at f = 1 MHz I_C = 0; V_{CE} = 10 V	C_{re}	typ.	0,4	pF
Noise figure at optimum source impedance I_C = 2 mA; V_{CE} = 10 V; f = 500 MHz	F	typ.	2,4	dB
Max. unilateral power gain I_C = 14 mA; V_{CE} = 10 V; f = 500 MHz	G_{UM}	typ.	19,5	dB
Output voltage at d_{im} = −60 dB I_C = 14 mA; V_{CE} = 10 V; R_L = 75 Ω; $f_{(p+q-r)}$ = 493,25 MHz	V_o	typ.	150	mV

MECHANICAL DATA

Dimensions in mm

Fig. 1 SOT-37.

Connections

1. Base
2. Emitter
3. Collector

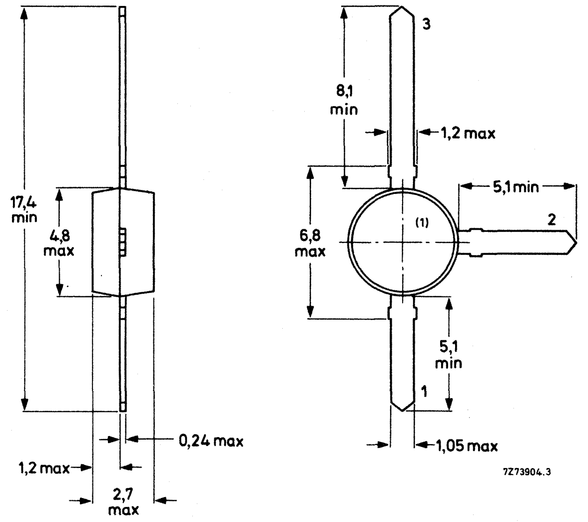

(1) = type number marking.

RATINGS

Limiting values in accordance with the Absolute Maximum System (IEC 134)

Collector-base voltage (open emitter)	V_{CBO}	max.	20	V
Collector-emitter voltage (open base)	V_{CEO}	max.	15	V
Emitter-base voltage (open collector)	V_{EBO}	max.	2	V
Collector current (d.c.)	I_C	max.	25	mA
Total power dissipation up to T_{amb} = 60 °C	P_{tot}	max.	180	mW
Storage temperature	T_{stg}		−65 to +150	°C
Junction temperature	T_j	max.	150	°C

THERMAL RESISTANCE

From junction to ambient in free air and mounted on a glass-fibre print of 40 mm x 25 mm x 1 mm (Fig. 2)	$R_{th\ j\text{-}a}$	=	500	K/W

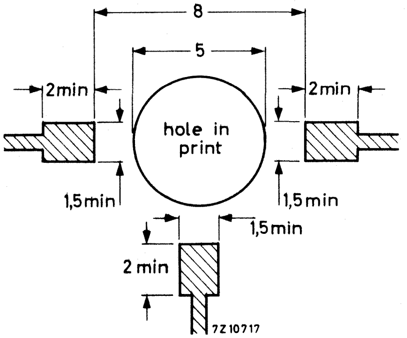

Fig. 2 Requirements for fibre-glass print. (Dimensions in mm)

CHARACTERISTICS

$T_j = 25$ °C unless otherwise specified

Collector cut-off current $I_E = 0$; $V_{CB} = 10$ V	I_{CBO}	max.	50	nA	
D.C. current gain $I_C = 14$ mA; $V_{CE} = 10$ V	h_{FE}	min. typ.	40 90		←
Transition frequency at f = 500 MHz $I_C = 14$ mA; $V_{CE} = 10$ V	f_T	typ.	5,0	GHz	←
Collector capacitance at f = 1 MHz $I_E = I_e = 0$; $V_{CB} = 10$ V	C_c	typ.	0,5	pF	
Emitter capacitance at f = 1 MHz $I_C = I_c = 0$; $V_{EB} = 0{,}5$ V	C_e	typ.	1,2	pF	
Feedback capacitance at f = 1 MHz $I_C = 0$; $V_{CE} = 10$ V	C_{re}	typ.	0,4	pF	
Noise figure at optimum source impedance $I_C = 2$ mA; $V_{CE} = 10$ V; f = 500 MHz; $T_{amb} = 25$ °C	F	typ.	2,4	dB	
Max. unilateral power gain (s_{re} assumed to be zero) $G_{UM} = 10 \log \frac{\lvert s_{fe}\rvert^2}{[1-\lvert s_{ie}\rvert^2]\,[1-\lvert s_{oe}\rvert^2]}$ $I_C = 14$ mA; $V_{CE} = 10$ V; f = 500 MHz; $T_{amb} = 25$ °C	G_{UM}	typ.	19,5	dB	
Output voltage at $d_{im} = -60$ dB $I_C = 14$ mA; $V_{CE} = 10$ V; $R_L = 75\ \Omega$; $T_{amb} = 25$ °C $V_p = V_o$ at $d_{im} = -60$ dB ; $f_p = 495{,}25$ MHz $V_q = V_o - 6$ dB ; $f_q = 503{,}25$ MHz $V_r = V_o - 6$ dB ; $f_r = 505{,}25$ MHz measured at $f_{(p+q-r)} = 495{,}25$ MHz	V_o	typ.	150	mV	←

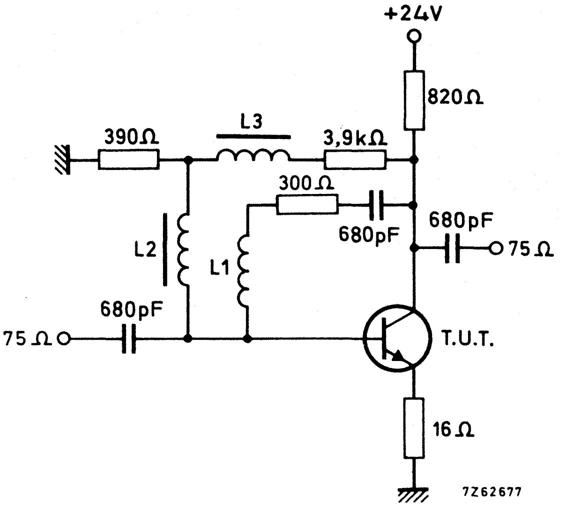

Fig. 3 Intermodulation test circuit.

L1 = 4 turns Cu wire (0,35 mm); winding pitch 1 mm; int. diam. 4 mm
L2 and L3 5 μH (code number: 3122 108 20150)

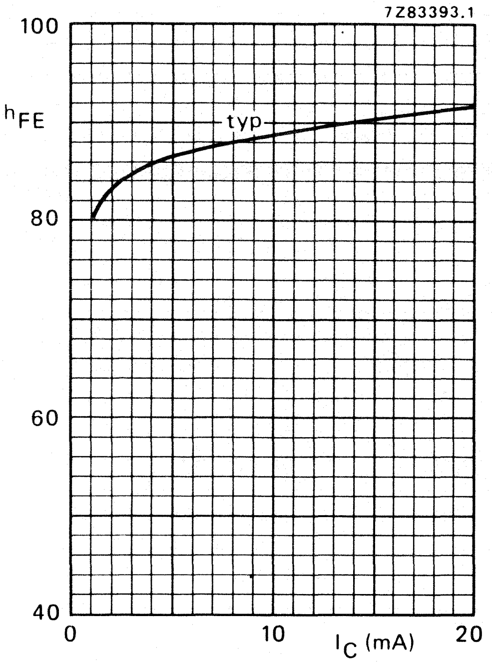

Fig. 4 V_{CE} = 10 V; T_j = 25 °C; typical values.

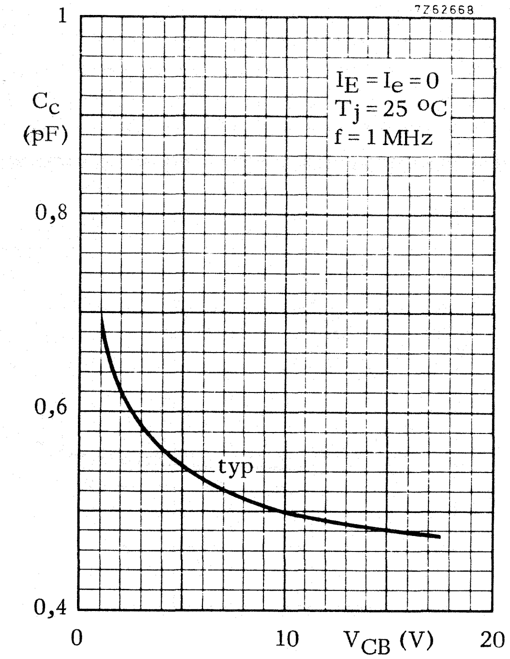

Fig. 5 $I_E = i_e = 0$; T_j = 25 °C; typical values.

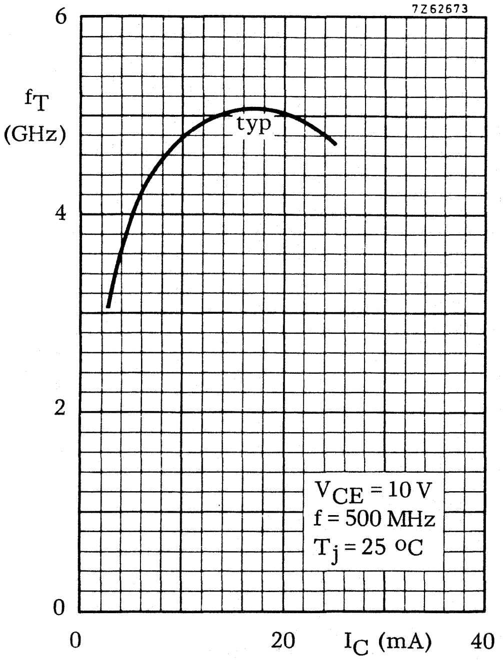

Fig. 6 V_{CE} = 10 V; f = 500 MHz; T_j = 25 °C; typical values.

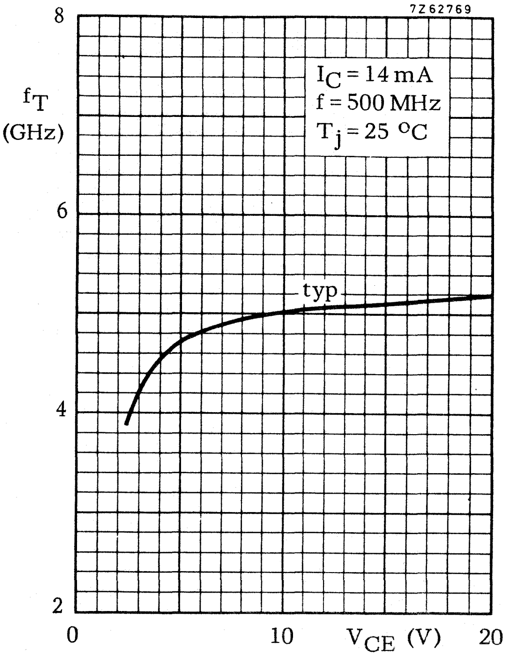

Fig. 7 I_C = 14 mA; f = 500 MHz; T_j = 25 °C; typical values.

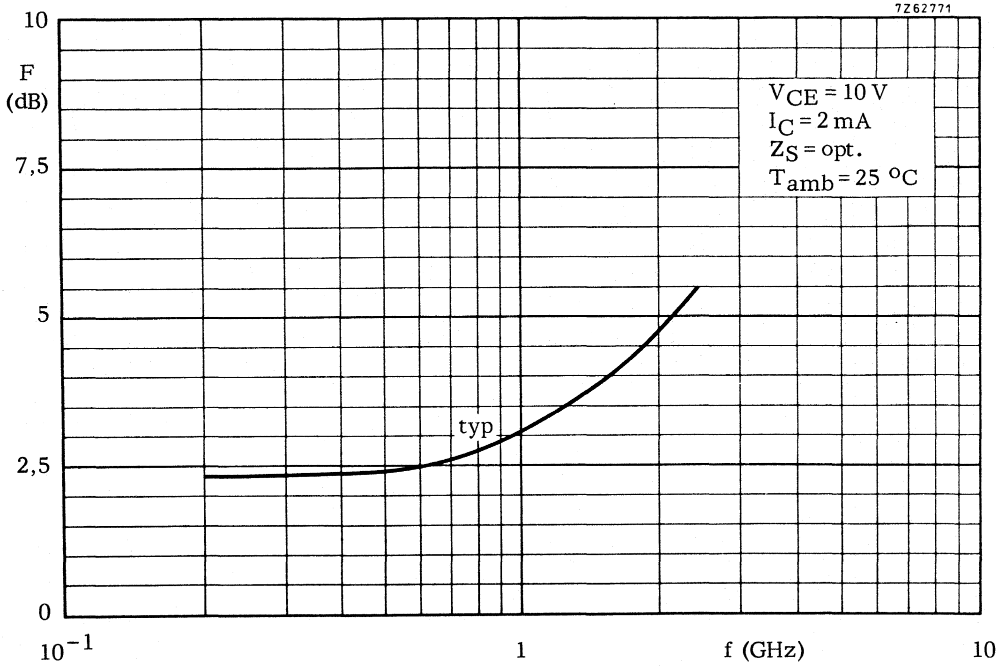

Fig. 8 V_{CE} = 10 V; I_C = 2 mA; Z_S = opt.; T_{amb} = 25 °C; typical values.

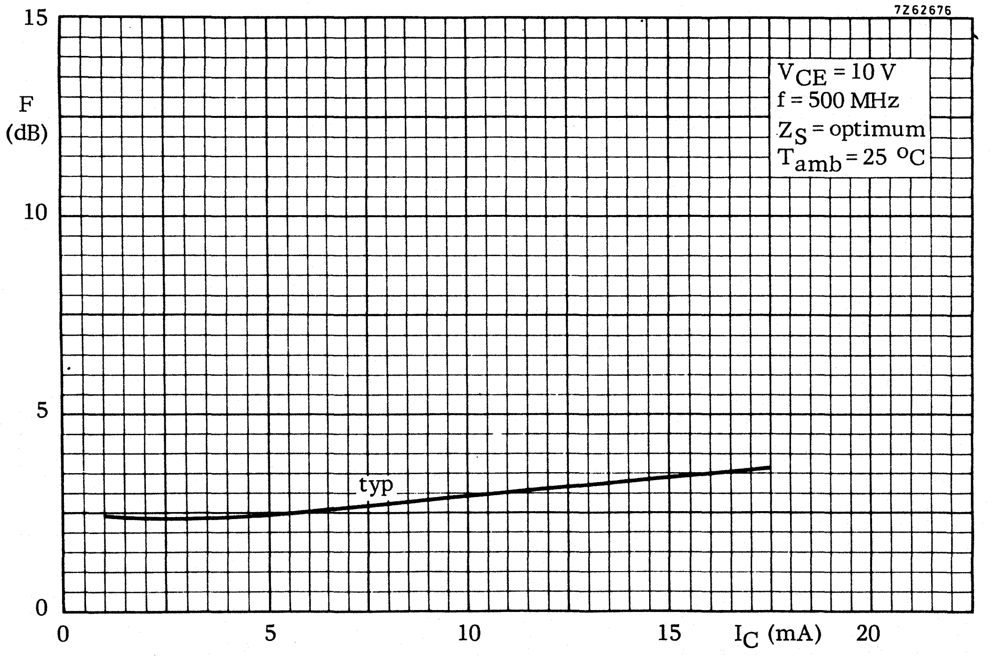

Fig. 9 V_{CE} = 10 V; f = 500 MHz; Z_S = opt.; T_{amb} = 25 °C; typical values.

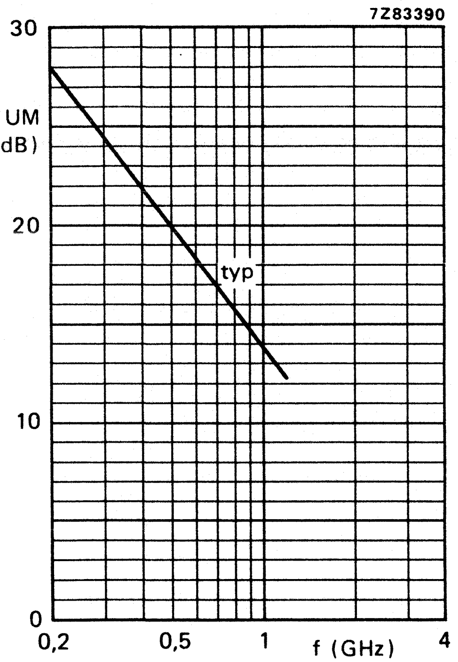

Fig. 10 V_{CE} = 10 V; I_C = 14 mA; T_{amb} = 25 °C; typical values.

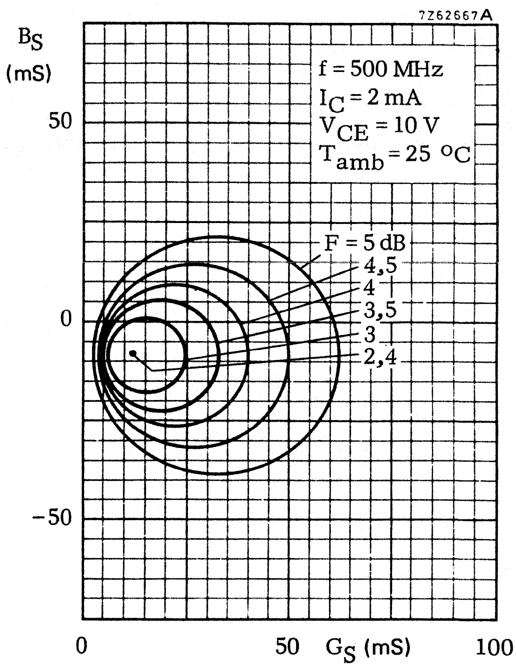

Fig. 11 Circles of constant noise figure; V_{CE} = 10 V; I_C = 2 mA; f = 500 MHz; T_{amb} = 25 °C; typical values.

N-P-N 1 GHz WIDEBAND TRANSISTOR

N-P-N transistor in a plastic SOT-37 envelope primarily intended for use in v.h.f. and u.h.f. wideband amplifiers. P-N-P complement is BFQ51.

Features of this device:

- low noise
- low intermodulation distortion
- high power gain
- gold metallization

QUICK REFERENCE DATA

Collector-base voltage (open emitter)	V_{CBO}	max.	20	V
Collector-emitter voltage (open base)	V_{CEO}	max.	15	V
Collector current (d.c.)	I_C	max.	25	mA
Total power dissipation up to T_{amb} = 60 °C	P_{tot}	max.	180	mW
Junction temperature	T_j	max.	150	°C
Transition frequency at f = 500 MHz I_C = 14 mA; V_{CE} = 10 V	f_T	typ.	5,0	GHz
Feedback capacitance at f = 1 MHz I_C = 0; V_{CE} = 10 V	C_{re}	typ.	0,35	pF
Maximum unilateral power gain at f = 800 MHz I_C = 14 mA; V_{CE} = 10 V	G_{UM}	typ.	15,5	dB
Noise figure at Z_S = 60 Ω I_C = 4 mA; V_{CE} = 10 V; f = 800 MHz	F	typ.	1,8	dB
Output voltage at d_{im} = −60 dB I_C = 14 mA; V_{CE} = 10 V; R_L = 75 Ω $f_{(p+q-r)}$ = 793,25 MHz	V_o	typ.	150	mV
Output power at 1 dB gain compression	P_{L1}	typ.	+ 8	dBm
Third order intercept point	ITO	typ.	+ 27	dBm

MECHANICAL DATA

SOT-37 (see Fig. 1).

MECHANICAL DATA

Dimensions in mm

Fig. 1 SOT-37.

Connections
1. Base
2. Emitter
3. Collector

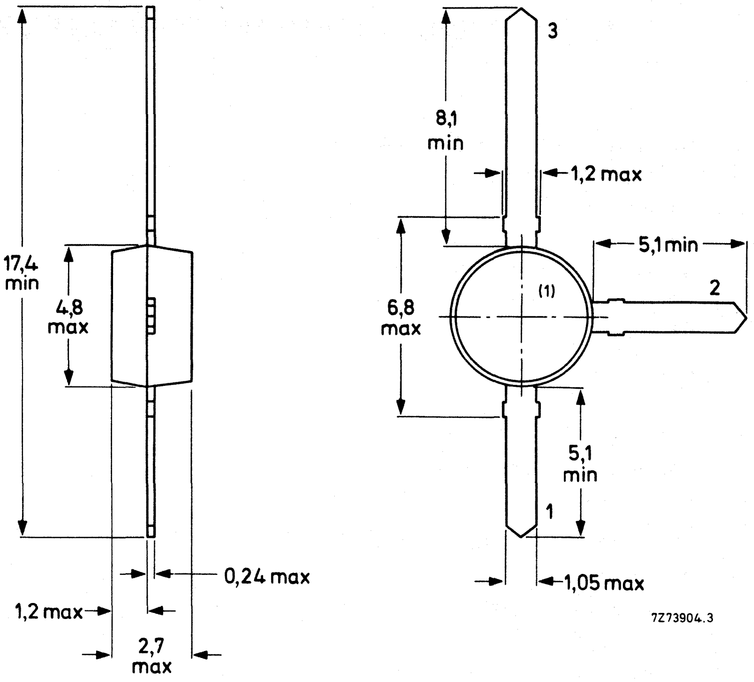

(1) = type number marking.

RATINGS

Limiting values in accordance with the Absolute Maximum System (IEC 134)

Collector-base voltage (open emitter)	V_{CBO}	max.	20	V
Collector-emitter voltage (open base)	V_{CEO}	max.	15	V
Emitter-base voltage (open collector)	V_{EBO}	max.	2	V
Collector current (d.c.)	I_C	max.	25	mA
Total power dissipation up to T_{amb} = 60 °C	P_{tot}	max.	180	mW
Storage temperature	T_{stg}	−65 to + 150		°C
Junction temperature	T_j	max.	150	°C

THERMAL RESISTANCE

From junction to ambient in free air mounted on a fibre-glass print (see Fig. 2) of 40 mm x 25 mm x 1 mm	$R_{th\ j\text{-}a}$	=	500	K/W

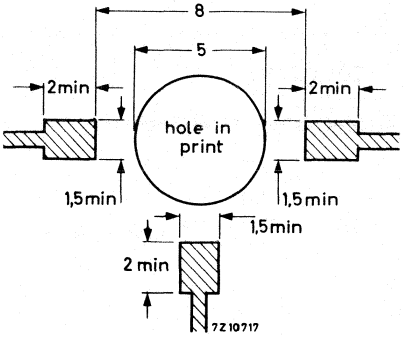

Fig. 2 Requirements for fibre-glass print. (Dimensions in mm.)

CHARACTERISTICS

T_j = 25 °C unless otherwise specified

Collector cut-off current $I_E = 0$; $V_{CB} = 10$ V	I_{CBO}	max.	50	nA	
D.C. current gain $I_C = 14$ mA; $V_{CE} = 10$ V	h_{FE}	min. typ.	40 90		←
Transition frequency at f = 500 MHz $I_C = 14$ mA; $V_{CE} = 10$ V	f_T	typ.	5,0	GHz	←
Collector capacitance at f = 1 MHz $I_E = I_e = 0$; $V_{CB} = 10$ V	C_c	typ.	0,6	pF	
Emitter capacitance at f = 1 MHz $I_C = I_c = 0$; $V_{EB} = 0,5$ V	C_e	typ.	1,2	pF	
Feedback capacitance at f = 1 MHz $I_C = 0$; $V_{CE} = 10$ V	C_{re}	typ.	0,35	pF	
Noise figure at $T_{amb} = 25$ °C $I_C = 4$ mA; $V_{CE} = 10$ V; $Z_S = 60\ \Omega$; f = 800 MHz	F	typ.	1,7	dB	←
$I_C = 4$ mA; $V_{CE} = 10$ V; $Z_S = Z_{opt}$; f = 2 GHz	F	typ.	3,6	dB	

Maximum unilateral power gain (s_{re} assumed to be zero)

$$G_{UM} = 10 \log \frac{|s_{fe}|^2}{(1 - |s_{ie}|^2)\ (1 - |s_{oe}|^2)}$$ ←

$I_C = 14$ mA; $V_{CE} = 10$ V; f = 800 MHz; $T_{amb} = 25$ °C	G_{UM}	typ.	15,5	dB	

Output voltage at d_{im} = −60 dB (see Figs 3 and 15)
(DIN 45004B, par. 6.3: 3-tone)
I_C = 14 mA; V_{CE} = 10 V; R_L = 75 Ω; VSWR < 2; T_{amb} = 25 °C
$V_p = V_o$ at d_{im} = −60 dB; f_p = 795,25 MHz
$V_q = V_o$ −6 dB ; f_q = 803,25 MHz
$V_r = V_o$ −6 dB ; f_r = 805,25 MHz
Measured at $f_{(p+q-r)}$ = 793,25 MHz — V_o typ. 150 mV

Second harmonic distortion (see Figs 3 and 16)
I_C = 14 mA; V_{CE} = 10 V; R_L = 75 Ω; VSWR < 2; T_{amb} = 25 °C
V_p = 60 mV at f_p = 250 MHz
V_q = 60 mV at f_q = 560 MHz
measured at $f_{(p+q)}$ = 810 MHz — d_2 typ. −50 dB

Output power at 1 dB gain compression (see Fig. 3)
I_C = 14 mA; V_{CE} = 10 V
R_L = 75 Ω; T_{amb} = 25 °C
measured at f = 800 MHz — P_{L1} typ. 8 dBm

Third order intercept point (see Fig. 3)
I_C = 14 mA; V_{CE} = 10 V
R_L = 75 Ω; T_{amb} = 25 °C
P_p = ITO − 6 dB; f_p = 800 MHz
P_q = ITO − 6 dB; f_q = 801 MHz
measured at $f_{(2q-p)}$ = 802 MHz and
at $f_{(2p-q)}$ = 799 MHz — ITO typ. 27 dBm

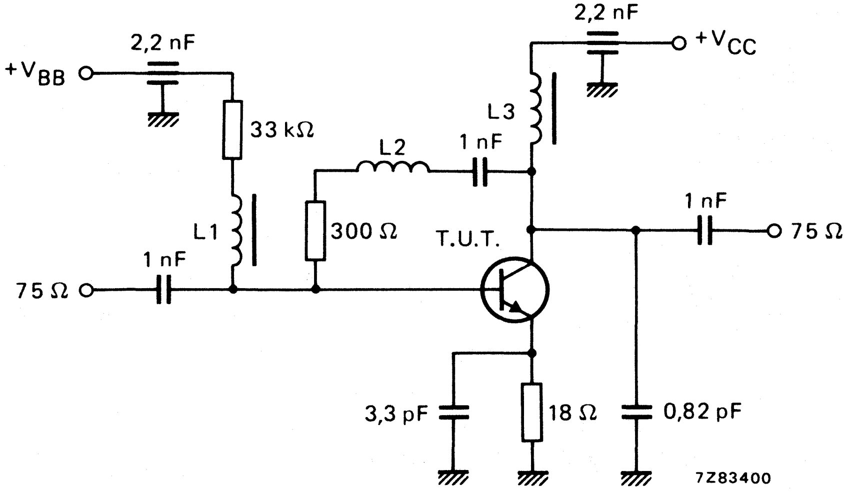

Fig. 3 Intermodulation distortion and second harmonic distortion test circuit.

L1 = L3 = 5 μH micro choke
L2 = 3 turns Cu wire (0,4 mm); internal diameter 3 mm; winding pitch 1 mm

s-parameters (common emitter) at V_{CE} = 5 V; T_{amb} = 25 °C; typical values. ←

I_C mA	f MHz	s_{ie}	s_{re}	s_{fe}	s_{oe}	G_{UM} dB
2	40	0,91/ −7,7°	0,01/84°	6,8/173°	0,99/ −2,7°	46,0
	200	0,79/ −37,3°	0,03/71°	6,5/143°	0,93/−12,5°	29,2
	500	0,52/ −81,0°	0,06/59°	4,6/116°	0,80/−22,5°	19,1
	800	0,34/−114,5°	0,08/58°	3,3/ 97°	0,73/−27,0°	14,2
	1000	0,26/−137,6°	0,09/59°	2,8/ 87°	0,70/−30,0°	12,2
	1200	0,22/−165,0°	0,10/61°	2,4/ 79°	0,67/−33,0°	10,4
5	40	0,80/ −11,7°	0,01/81°	14,4/169°	0,99/ −4,5°	44,6
	200	0,59/ −51,0°	0,03/68°	11,2/134°	0,85/−17,0°	28,4
	500	0,29/ −95,0°	0,05/66°	6,3/103°	0,70/−22,0°	19,3
	800	0,16/−130,0°	0,07/69°	4,2/ 88°	0,64/−26,0°	14,9
	1000	0,12/−162,0°	0,09/70°	3,4/ 81°	0,63/−28,0°	12,9
	1200	0,12/+ 158,0°	0,10/71°	2,9/ 74°	0,61/−31,0°	11,3
10	40	0,67/ −16,7°	0,01/80°	23,3/164°	0,97/ −6,6°	42,2
	200	0,39/ −63,0°	0,02/70°	14,5/122°	0,76/−18,0°	27,7
	500	0,15/−109,0°	0,05/73°	7,0/ 96°	0,64/−20,0°	19,3
	800	0,09/−152,0°	0,07/75°	4,6/ 84°	0,60/−24,0°	15,2
	1000	0,07/+ 155,0°	0,09/75°	3,7/ 77°	0,59/−26,0°	13,2
	1200	0,10/+ 124,0°	0,11/74°	3,1/ 72°	0,58/−29,0°	11,7
14	40	0,58/ −20,0°	0,01/79°	28,3/160°	0,96/ −7,8°	41,9
	200	0,30/ −71,0°	0,02/72°	15,5/117°	0,72/−18,0°	27,9
	500	0,11/−119,0°	0,05/75°	7,2/ 93°	0,62/−19,0°	19,3
	800	0,07/−177,0°	0,07/77°	4,6/ 82°	0,59/−23,0°	15,1
	1000	0,08/+ 138,0°	0,09/76°	3,8/ 76°	0,58/−25,0°	13,4
	1200	0,12/+ 118,0°	0,11/76°	3,2/ 71°	0,57/−28,0°	11,9
20	40	0,49/ −25,0°	0,01/78°	32,9/157°	0,94/ −9,0°	40,9
	200	0,22/ −82,0°	0,02/74°	15,9/112°	0,69/−17,0°	27,1
	500	0,09/−143,0°	0,05/78°	7,1/ 91°	0,61/−18,0°	19,1
	800	0,08/+ 160,0°	0,07/78°	4,5/ 80°	0,59/−22,0°	15,0
	1000	0,10/+ 130,0°	0,09/78°	3,7/ 75°	0,58/−24,0°	13,2
	1200	0,14/+ 115,0°	0,11/77°	3,1/ 69°	0,57/−28,0°	11,6
30	40	0,36/ −38,9°	0,01/76°	31,2/151°	0,90/−10,3°	37,7
	200	0,18/−122,0°	0,02/75°	14,0/106°	0,66/−14,0°	25,5
	500	0,15/−175,0°	0,05/80°	6,1/ 88°	0,61/−16,0°	17,8
	800	0,17/+ 148,0°	0,07/80°	3,9/ 78°	0,59/−21,0°	13,8
	1000	0,19/+ 131,0°	0,09/79°	3,1/ 72°	0,59/−24,0°	11,8
	1200	0,23/+ 119,0°	0,11/79°	2,7/ 67°	0,57/−28,0°	10,6

→ **s-parameters** (common emitter) at V_{CE} = 10 V; T_{amb} = 25 °C; typical values.

I_C mA	f MHz	s_{ie}	s_{re}	s_{fe}	s_{oe}	G_{UM} dB
2	40	0,91/ −7,5°	0,01/84°	7,0/173°	0,99/ −2,6°	46,0
	200	0,81/ −36,0°	0,03/72°	6,3/149°	0,94/−12,0°	30,0
	500	0,54/ −78,0°	0,06/59°	4,6/118°	0,82/−21,0°	19,6
	800	0,35/−110,0°	0,08/58°	3,4/ 98°	0,74/−26,0°	14,6
	1000	0,27/−132,0°	0,08/59°	2,8/ 89°	0,72/−29,0°	12,4
	1200	0,22/−159,0°	0,09/61°	2,5/ 80°	0,69/−0,32°	11,0
5	40	0,81/ −11,1°	0,01/82°	14,4/169°	0,99/ −4,3°	44,8
	200	0,61/ −48,0°	0,03/69°	11,1/135°	0,86/−16,0°	28,8
	500	0,31/ −90,0°	0,05/66°	6,4/105°	0,71/−22,0°	21,2
	800	0,17/−120,0°	0,07/69°	4,3/ 90°	0,66/−25,0°	15,3
	1000	0,11/−148,0°	0,08/70°	3,5/ 82°	0,64/−27,0°	13,2
	1200	0,10/+167,0°	0,10/71°	3,0/ 76°	0,63/−30,0°	11,8
10	40	0,70/ −15,2°	0,01/80°	23,0/164°	0,97/ −6,1°	42,4
	200	0,42/ −58,0°	0,02/70°	14,8/124°	0,78/−17,0°	28,3
	500	0,17/ −95,0°	0,05/73°	7,3/ 97°	0,65/−20,0°	19,8
	800	0,07/−104,0°	0,07/75°	4,7/ 85°	0,62/−23,0°	15,6
	1000	0,04/−174,0°	0,09/75°	3,9/ 79°	0,61/−25,0°	13,8
	1200	0,07/+120,0°	0,10/75°	3,3/ 73°	0,59/−28,0°	12,2
14	40	0,63/ −18,0°	0,01/79°	28,2/161°	0,96/ −7,2°	42,3
	200	0,34/ −63,0°	0,02/72°	15,9/119°	0,74/−17,0°	28,0
	500	0,13/ −98,0°	0,05/75°	7,5/ 95°	0,63/−19,0°	19,8
	800	0,05/−136,0°	0,07/77°	4,8/ 83°	0,61/−22,0°	15,5
	1000	0,04/+133,0°	0,09/76°	3,9/ 77°	0,60/−25,0°	13,8
	1200	0,08/+108,0°	0,10/76°	3,3/ 72°	0,58/−28,0°	12,2

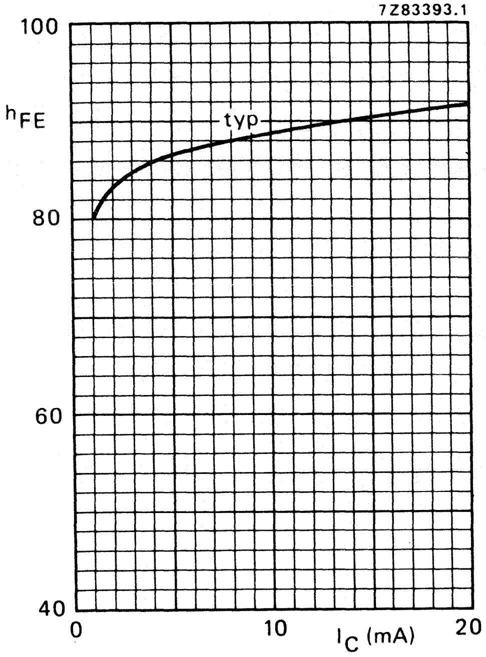

Fig. 4 V_{CE} = 10 V; T_j = 25 °C; typ. values.

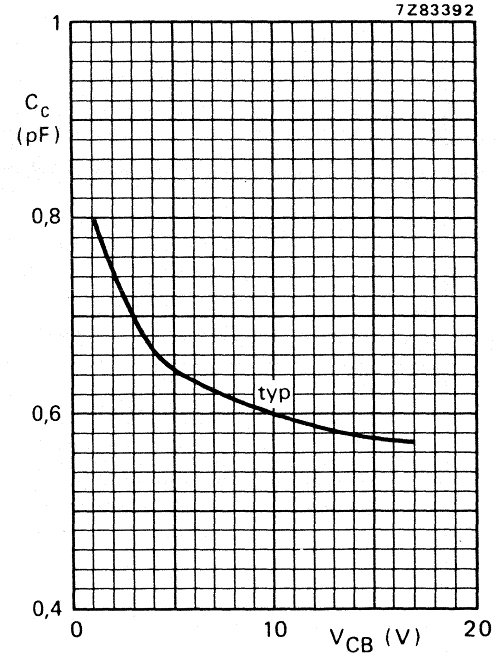

Fig. 5 $I_E = I_e = 0$; f = 1 MHz; T_j = 25 °C; typ. values.

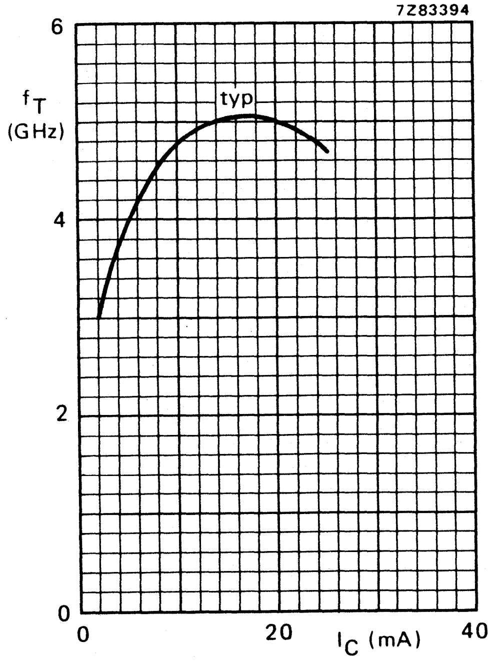

Fig. 6 V_{CE} = 10 V; f = 500 MHz; T_j = 25 °C; typical values.

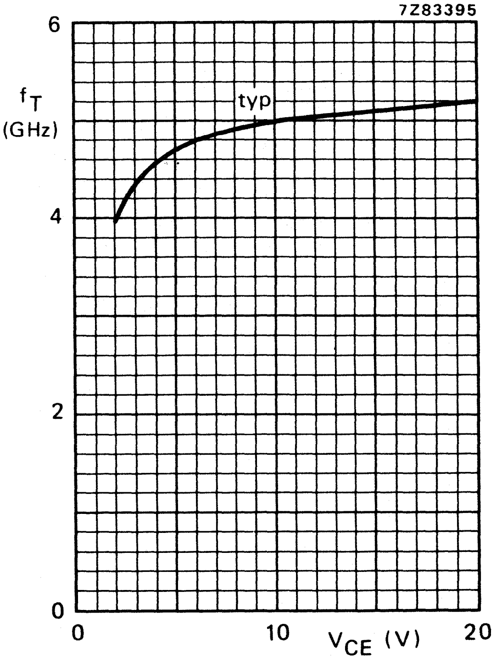

Fig. 7 I_C = 14 mA; f = 500 MHz; T_j = 25 °C; typical values.

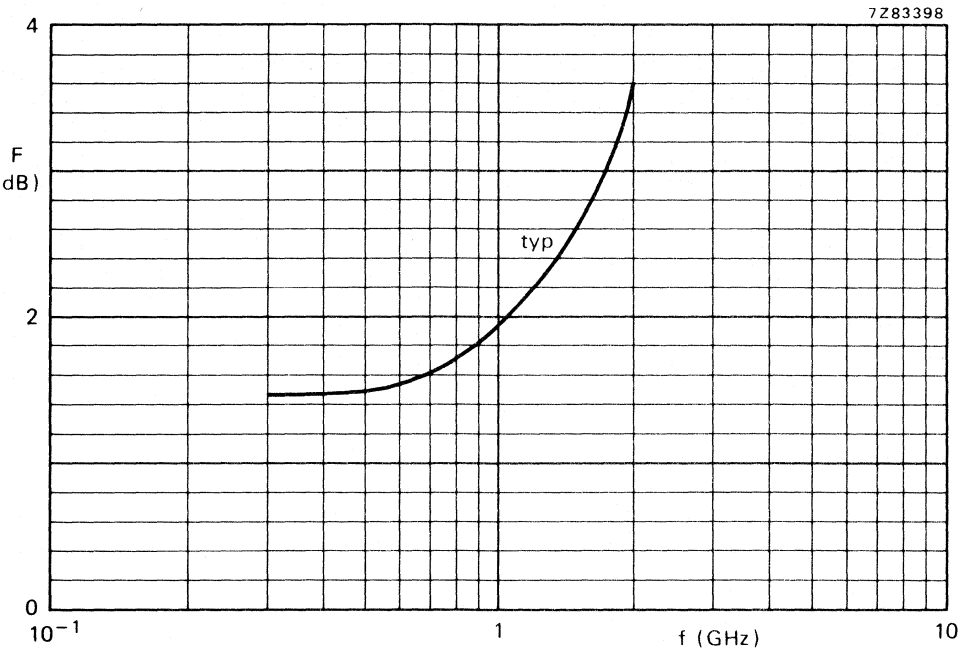

Fig. 8 V_{CE} = 10 V; I_C = 4 mA; Z_S = optimum; T_{amb} = 25 °C; typical values.

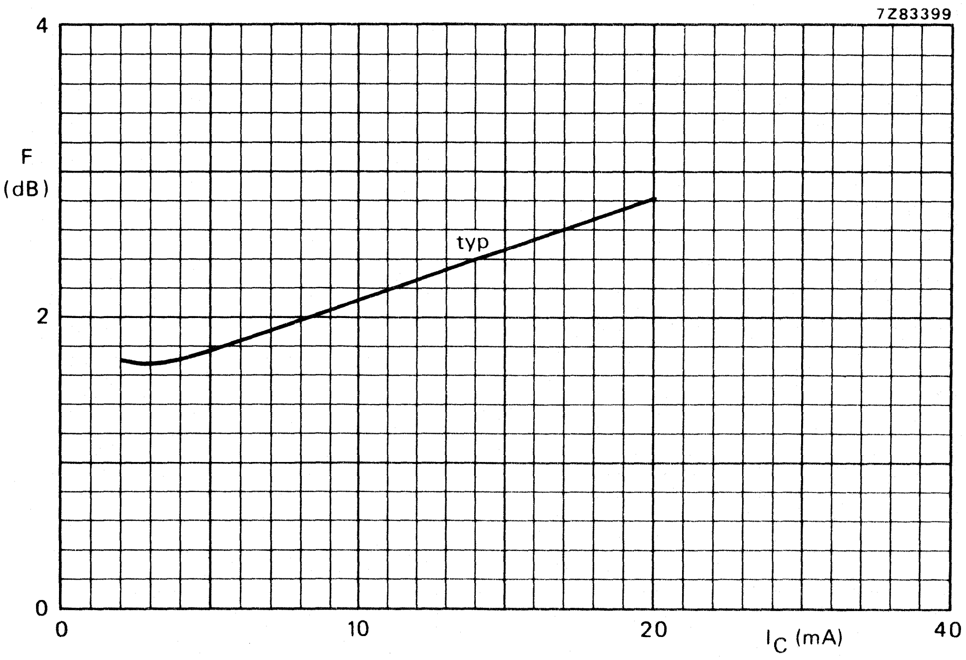

Fig. 9 V_{CE} = 10 V; f = 800 MHz; Z_S = optimum; T_{amb} = 25 °C; typical values.

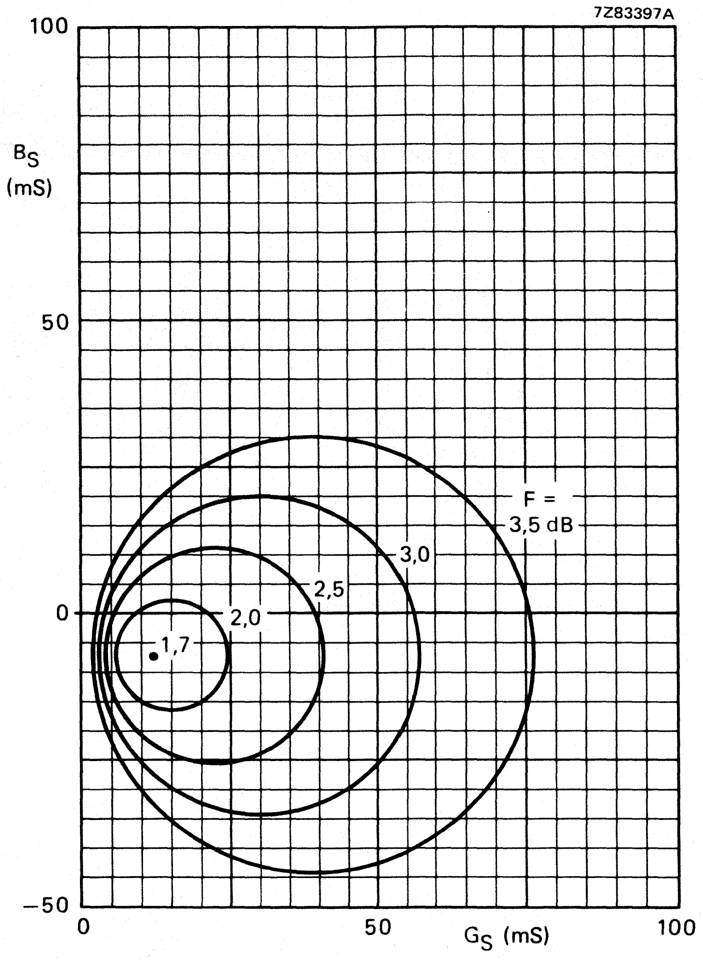

Fig. 10 Circles of constant noise figure.
V_{CE} = 10 V; I_C = 4 mA; f = 800 MHz; T_{amb} = 25 °C;
typical values.

Conditions for Figs 11 and 12:
V_{CE} = 10 V; I_C = 14 mA;
T_{amb} = 25 °C; typical values.

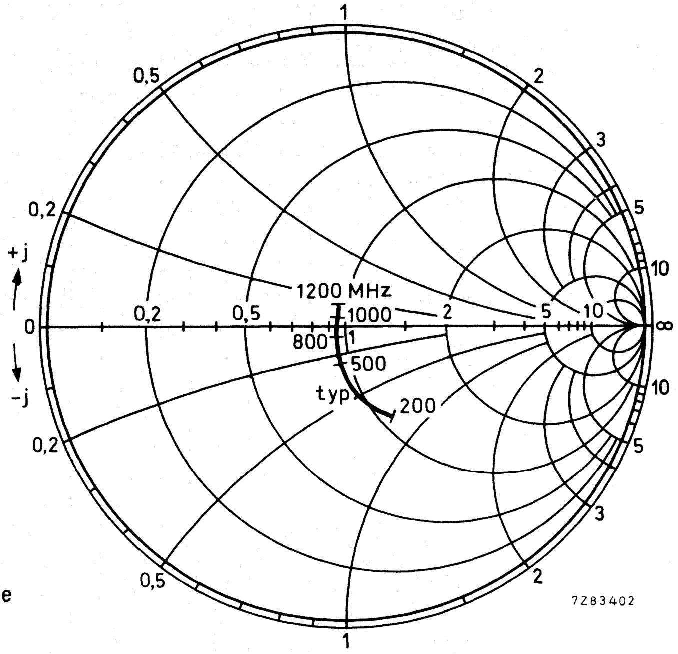

Fig. 11 Input impedance derived from input reflection coefficient s_{ie} co-ordinates in ohm x 50.

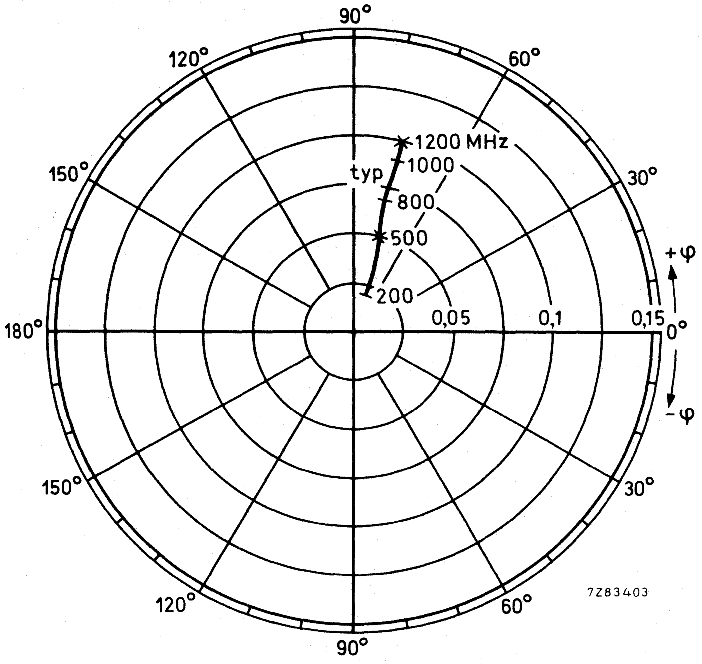

Fig. 12 Reverse transmission coefficient s_{re}.

Conditions for Figs 13 and 14:

V_{CE} = 10 V; I_C = 14 mA;

T_{amb} = 25 °C; typical values.

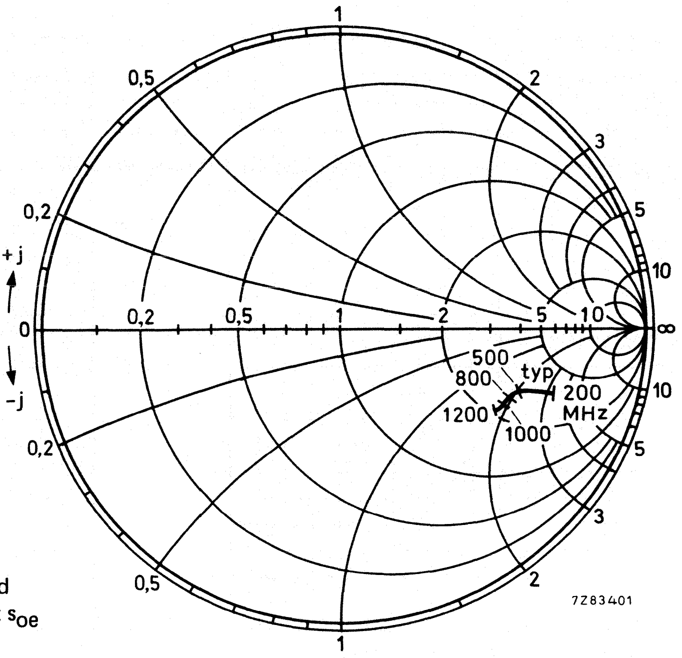

Fig. 13 Output impedance derived from output reflection coefficient s_{oe} co-ordinates in ohm x 50.

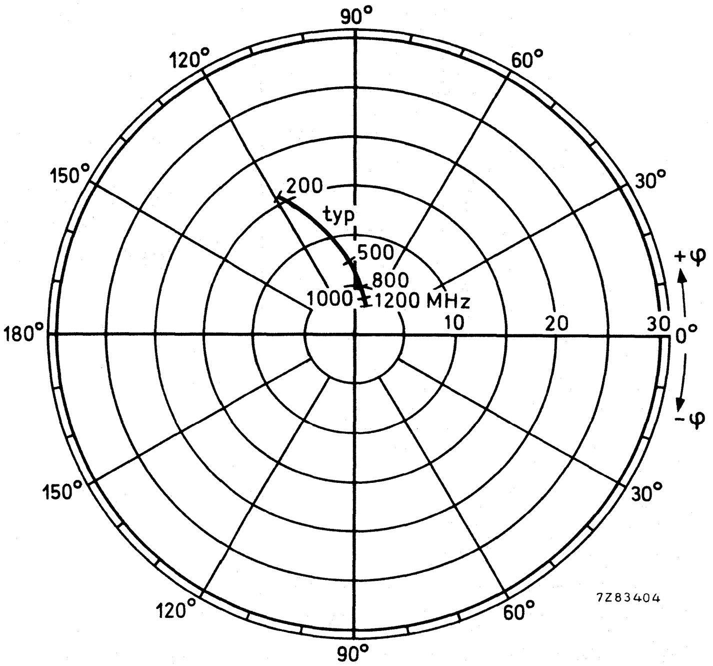

Fig. 14 Forward transmission coefficient s_{fe}.

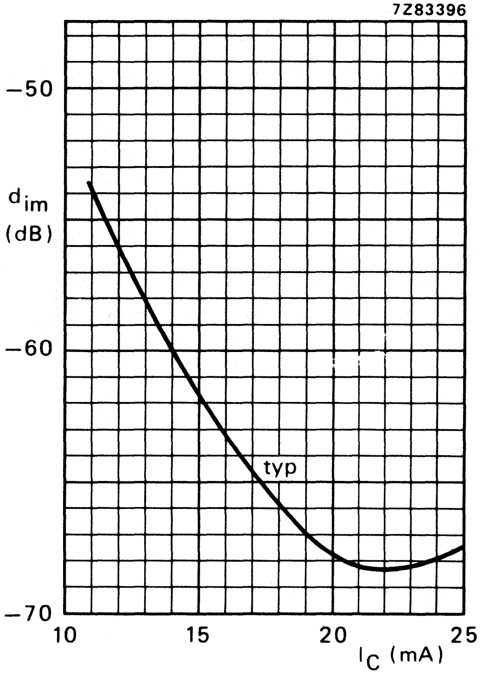

Fig. 15.

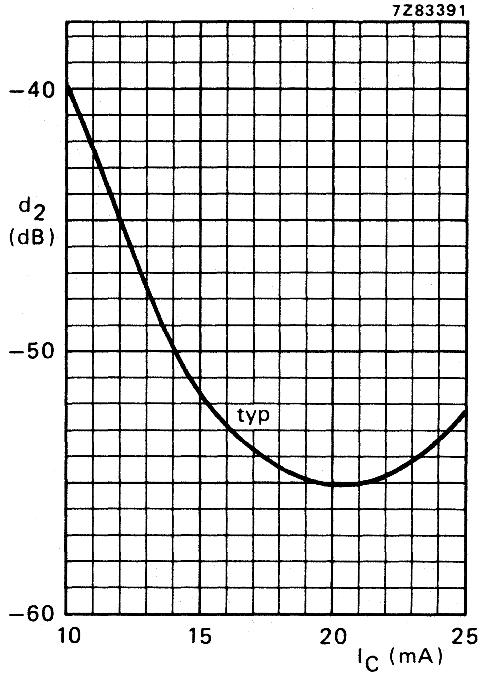

Fig. 16.

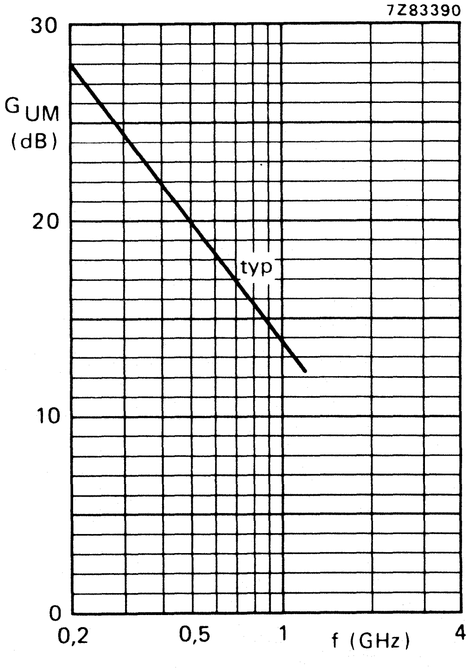

Fig. 15 V_{CE} = 10 V; V_o = 43,5 dBmV = 150 mV; $f_{(p+q-r)}$ = 793,25 MHz; T_{amb} = 25 °C; typ. values. measured in test circuit (see Fig. 3).

Fig. 16 V_{CE} = 10 V; V_o = 60 mV; $f_{(p+q)}$ = 810 MHz; T_{amb} = 25 °C; measured in test circuit (see Fig. 3); typical values.

Fig. 17 V_{CE} = 10 V; I_C = 14 mA; T_{amb} = 25 °C; typical values.

CLASS-B OPERATION

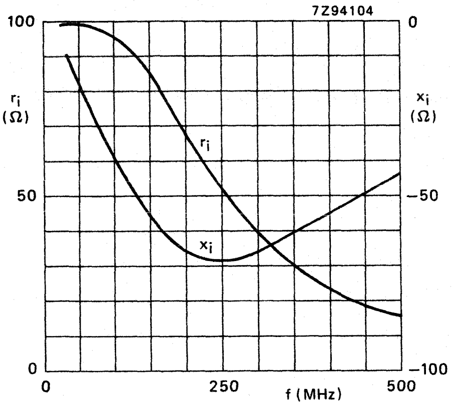

Fig. 18 Input impedance (series components).

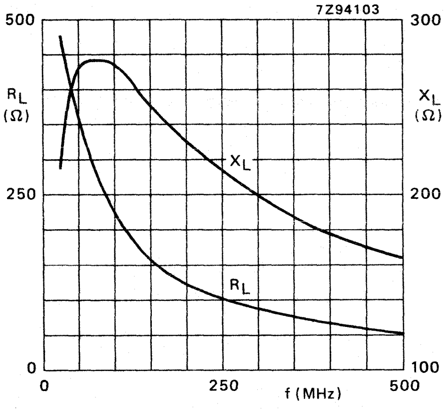

Fig. 19 Load impedance (series components).

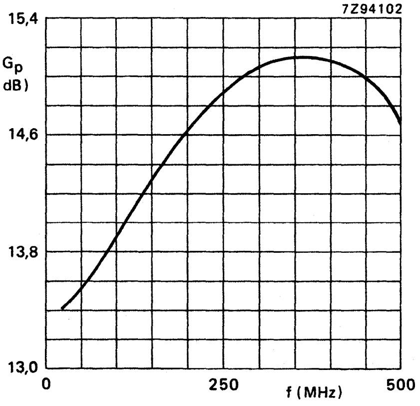

Fig. 20 Power gain versus frequency.

Conditions for Figs 18 to 20:

V_{CE} = 10 V; P_L = 100 mW; T_{amb} = 25 °C; typical values. ←

OPERATING NOTE for Figs 18 to 20:

A base-emitter resistor of 100 Ω is recommended to avoid oscillation. This resistor must be effective for r.f. only.

N-P-N 1 GHz WIDEBAND TRANSISTOR

N-P-N transistor in a plastic SOT-37 envelope. It is primarily intended for use in u.h.f. and microwave amplifiers such as in aerial amplifiers, radar systems, oscilloscopes, spectrum analysers etc.

The transistor features very low intermodulation distortion and high power gain; thanks to its very high transition frequency, it also has excellent wideband properties and low noise up to high frequencies.

P-N-P complement is BFQ23.

QUICK REFERENCE DATA

Collector-base voltage (open emitter)	V_{CBO}	max.	15	V
Collector-emitter voltage (open base)	V_{CEO}	max.	12	V
Collector current (d.c.)	I_C	max.	35	mA
Total power dissipation up to T_{amb} = 60 °C	P_{tot}	max.	180	mW
Junction temperature	T_j	max.	150	°C
Transition frequency at f = 500 MHz I_C = 30 mA; V_{CE} = 5 V	f_T	typ.	5,0	GHz
Feedback capacitance at f = 1 MHz I_C = 0; V_{CE} = 5 V	C_{re}	typ.	0,8	pF
Noise figure at optimum source impedance I_C = 2 mA; V_{CE} = 5 V; f = 500 MHz	F	typ.	1,9	dB
Max. unilateral power gain I_C = 30 mA; V_{CE} = 5 V; f = 500 MHz	G_{UM}	typ.	18,0	dB
Output voltage at d_{im} = −60 dB I_C = 30 mA; V_{CE} = 5 V; R_L = 75 Ω; $f_{(p+q-r)}$ = 493,25 MHz	V_o	typ.	300	mV

MECHANICAL DATA

Dimensions in mm

Fig. 1 SOT-37.

Connections

1. Base
2. Emitter
3. Collector

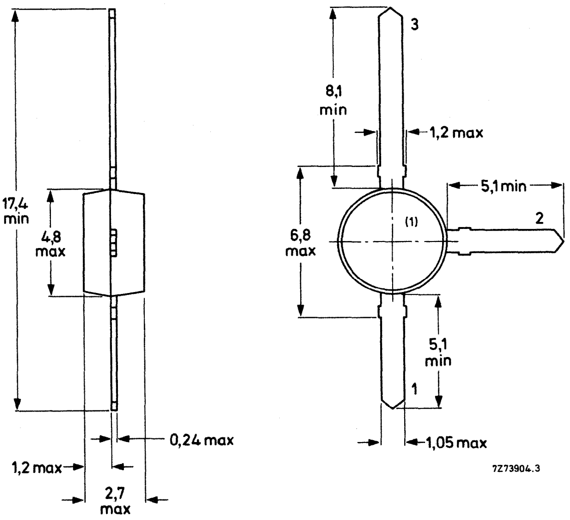

(1) = type number marking.

RATINGS

Limiting values in accordance with the Absolute Maximum System (IEC 134)

Collector-base voltage (open emitter)	V_{CBO}	max.	15	V
Collector-emitter voltage (open base)	V_{CEO}	max.	12	V
Emitter-base voltage (open collector)	V_{EBO}	max.	2	V
Collector current (d.c.)	I_C	max.	35	mA
Total power dissipation up to T_{amb} = 60 °C	P_{tot}	max.	180	mW
Storage temperature	T_{stg}		−65 to +150	°C
Junction temperature	T_j	max.	150	°C

THERMAL RESISTANCE

From junction to ambient in free air and mounted on a glass-fibre print of 40 mm x 25 mm x 1 mm	$R_{th\ j\text{-}a}$	=	500	K/W

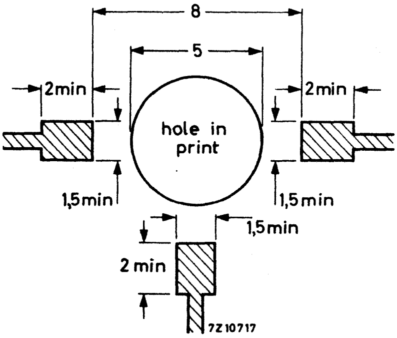

Fig. 2 Requirements for fibre-glass print. (Dimensions in mm)

CHARACTERISTICS

T_j = 25 °C unless otherwise specified

Collector cut-off current $I_E = 0$; $V_{CB} = 5$ V	I_{CBO}	max.	50	nA	
D.C. current gain $I_C = 30$ mA; $V_{CE} = 5$ V	h_{FE}	min. typ.	40 90		←
Transition frequency at f = 500 MHz $I_C = 30$ mA; $V_{CE} = 5$ V	f_T	typ.	5,0	GHz	←
Collector capacitance at f = 1 MHz $I_E = I_e = 0$; $V_{CB} = 10$ V	C_c	typ.	0,7	pF	
Emitter capacitance at f = 1 MHz $I_C = I_c = 0$; $V_{EB} = 0{,}5$ V	C_e	typ.	2,5	pF	
Feedback capacitance at f = 1 MHz $I_C = 0$; $V_{CE} = 5$ V	C_{re}	typ.	0,8	pF	
Noise figure at optimum source impedance $I_C = 2$ mA; $V_{CE} = 5$ V; f = 500 MHz; $T_{amb} = 25$ °C	F	typ.	1,9	dB	

Max. unilateral power gain (s_{re} assumed to be zero)

$$G_{UM} = 10 \log \frac{|s_{fe}|^2}{[1-|s_{ie}|^2]\,[1-|s_{oe}|^2]}$$

$I_C = 30$ mA; $V_{CE} = 5$ V; f = 500 MHz; $T_{amb} = 25$ °C	G_{UM}	typ.	18,0	dB	

Output voltage at $d_{im} = -60$ dB ←

$I_C = 30$ mA; $V_{CE} = 5$ V;
$R_L = 75\ \Omega$; $T_{amb} = 25$ °C

$V_p = V_o$ at $d_{im} = -60$ dB ; $f_p = 495{,}25$ MHz
$V_q = V_o -6$ dB ; $f_q = 503{,}25$ MHz
$V_r = V_o -6$ dB ; $f_r = 505{,}25$ MHz

measured at $f_{(p+q-r)} = 493{,}25$ MHz	V_o	typ.	300	mV

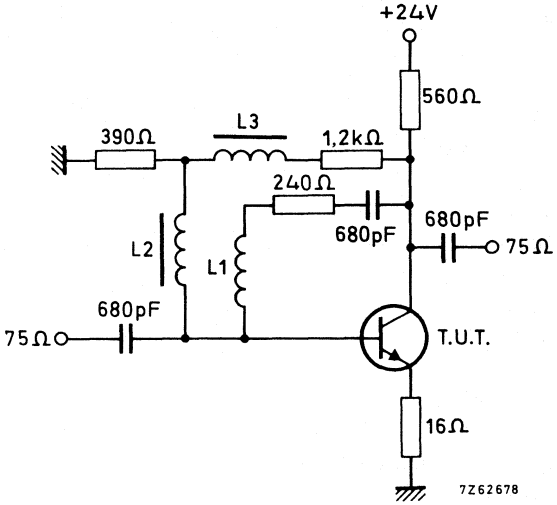

Fig. 3 Intermodulation test circuit.

L1 = 4 turns Cu wire (0,35 mm); winding pitch 1 mm; int. diam. 4 mm
L2 and L3 5 μH (code number: 3122 108 20150)

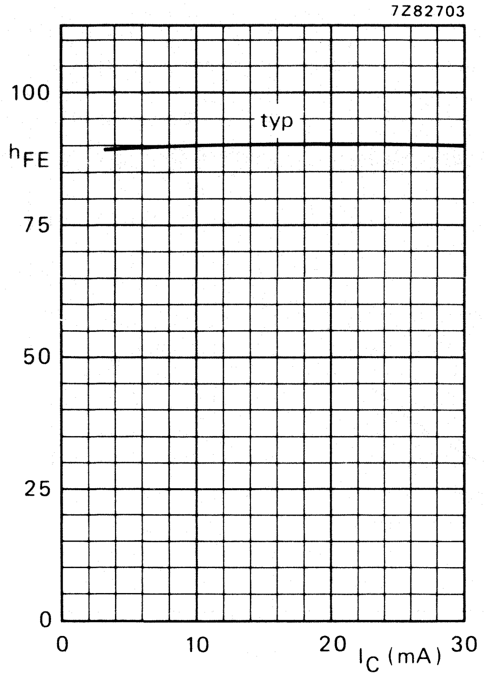

Fig. 4 V_{CE} = 5 V; T_j = 25 °C; typical values.

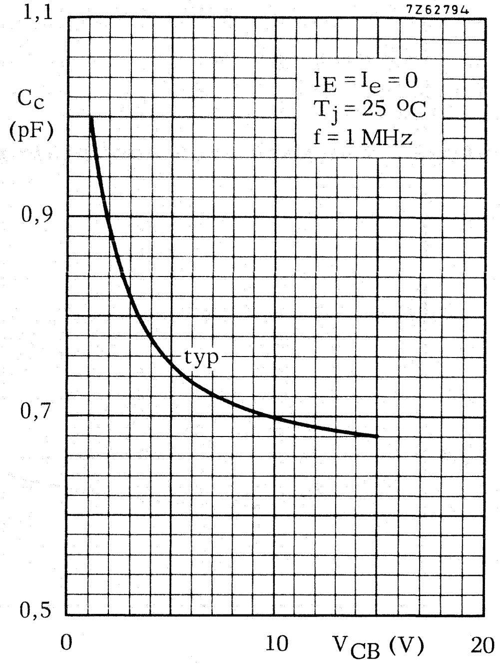

Fig. 5 $I_E = i_e = 0$; T_j = 25 °C; f = 1 MHz; typical values.

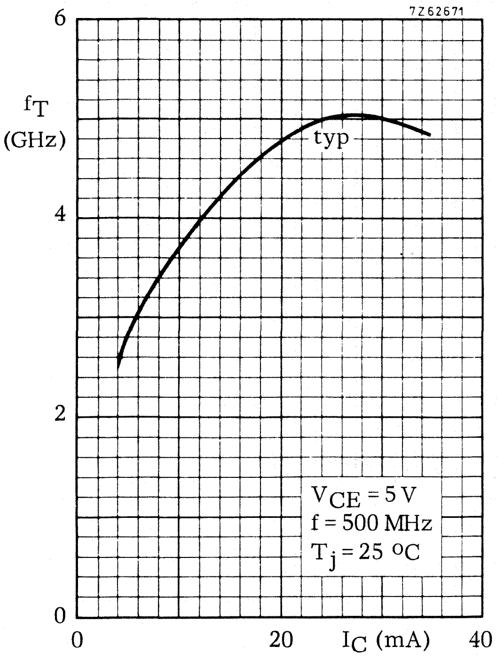

Fig. 6 V_{CE} = 5 V; f = 500 MHz; T_j = 25 °C.

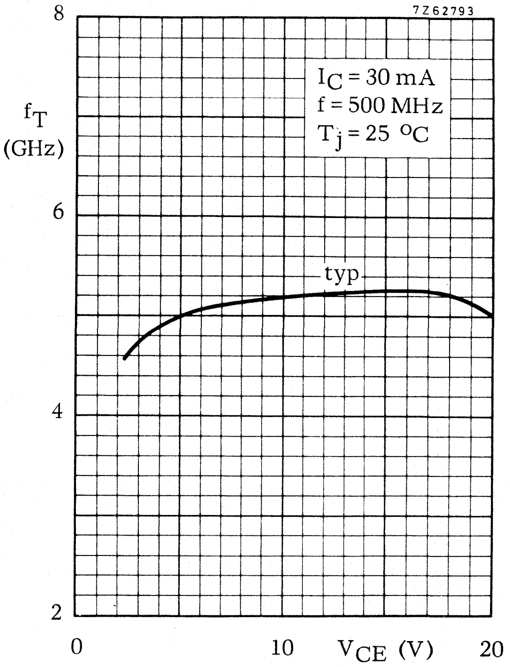

Fig. 7 I_C = 30 mA; f = 300 MHz; T_j = 25 °C.

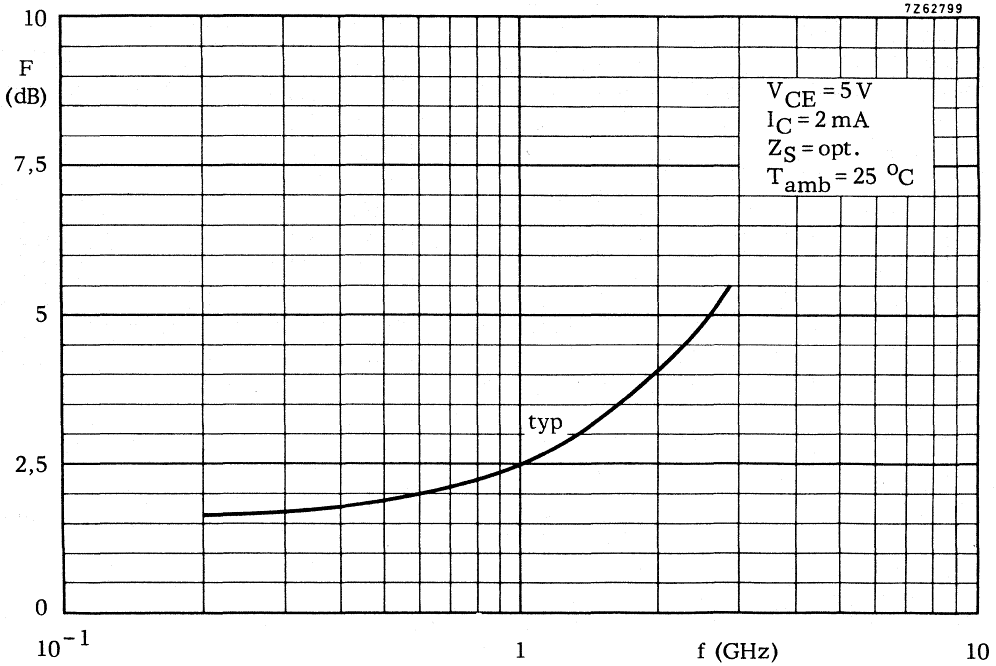

Fig. 8 V_{CE} = 5 V; I_C = 2 mA; Z_S = opt.; T_{amb} = 25 °C; typical values.

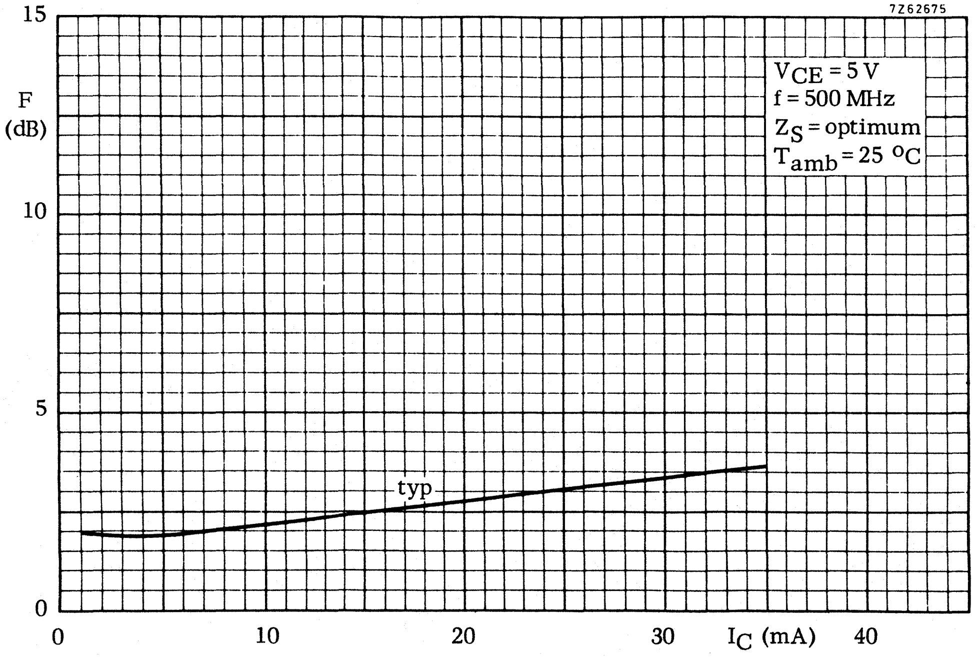

Fig. 9 V_{CE} = 5 V; f = 500 MHz; Z_S = opt.; T_{amb} = 25 °C; typical values.

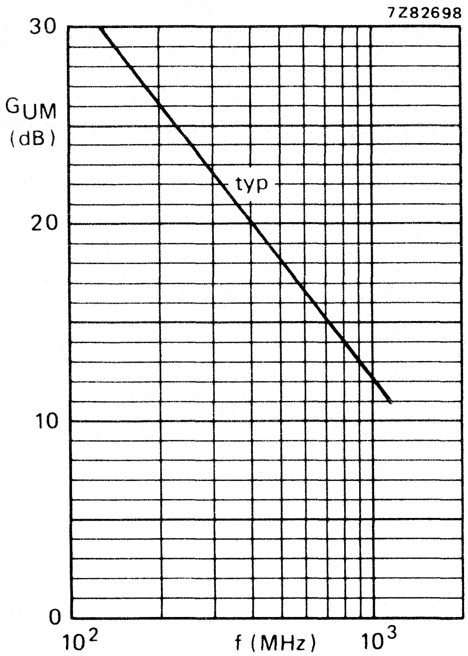

Fig. 10 V_{CE} = 5 V; I_C = 30 mA; T_{amb} = 25 °C; typical values.

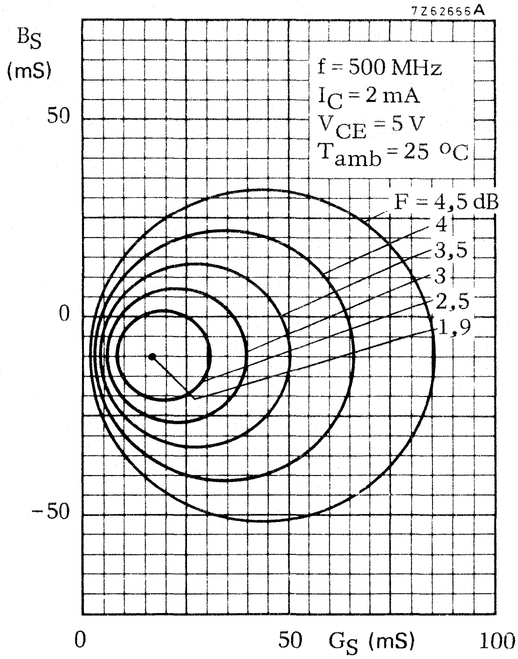

Fig. 11 Circles of constant noise figure; V_{CE} = 5 V; I_C = 2 mA; f = 500 MHz; T_{amb} = 25 °C; typical values.

N-P-N 1 GHz WIDEBAND TRANSISTOR

N-P-N transistor in a plastic SOT-37 envelope primarily intended for use in u.h.f. and microwave amplifiers. P-N-P complement is BFQ23.

Features of this device:

- low noise;
- very low intermodulation distortion;
- high power gain;
- gold metallization.

QUICK REFERENCE DATA

Collector-base voltage (open emitter)	V_{CBO}	max.	15	V
Collector-emitter voltage (open base)	V_{CEO}	max.	12	V
Collector current (d.c.)	I_C	max.	35	mA
Total power dissipation up to T_{amb} = 60 °C	P_{tot}	max.	300	mW
Junction temperature	T_j	max.	150	°C
Transition frequency at f = 500 MHz I_C = 30 mA; V_{CE} = 5 V	f_T	typ.	6,0	GHz
Feedback capacitance at f = 1 MHz I_C = 0; V_{CE} = 10 V	C_{re}	typ.	0,6	pF
Noise figure at optimum source impedance I_C = 4 mA; V_{CE} = 8 V; f = 800 MHz	F	typ.	1,6	dB
Maximum unilateral power gain I_C = 30 mA; V_{CE} = 8 V; f = 800 MHz	G_{UM}	typ.	14,0	dB
Output voltage at d_{im} = −60 dB (see Fig. 3) I_C = 30 mA; V_{CE} = 8 V; R_L = 75 Ω $f_{(p+q-r)}$ = 793,25 MHz	V_o	typ.	425	mV
Output power at 1 dB gain compression	P_{L1}	typ.	+ 17	dBm
Third order intercept point	ITO	typ.	+ 36	dBm

MECHANICAL DATA

SOT-37 (see Fig. 1).

MECHANICAL DATA

Dimensions in mm

Fig. 1 SOT-37.

Connections
1. Base
2. Emitter
3. Collector

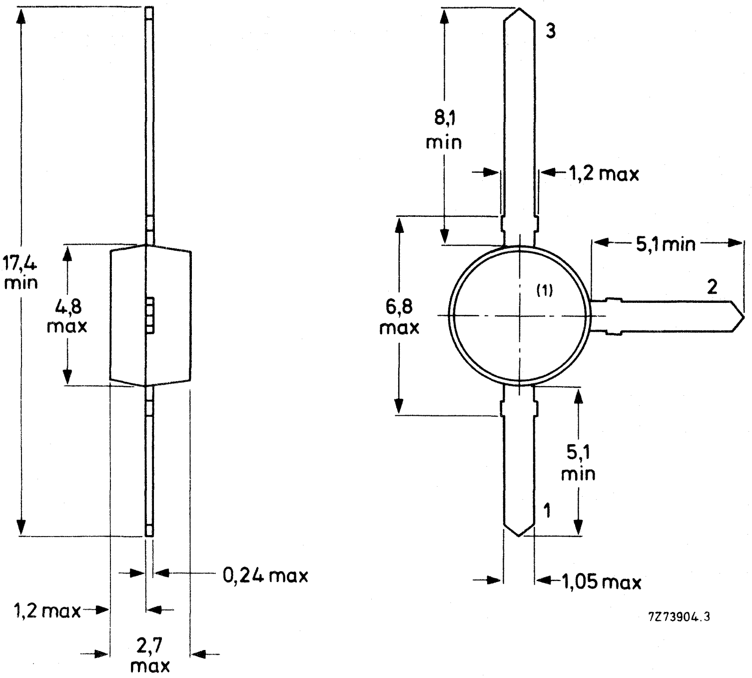

(1) = type number marking.

RATINGS

Limiting values in accordance with the Absolute Maximum System (IEC 134)

Collector-base voltage (open emitter)	V_{CBO}	max.	15	V
Collector-emitter voltage (open base)	V_{CEO}	max.	12	V
Emitter-base voltage (open collector)	V_{EBO}	max.	2	V
Collector current (d.c.)	I_C	max.	35	mA
Total power dissipation up to T_{amb} = 60 °C	P_{tot}	max.	300	mW
Storage temperature	T_{stg}	−65 to +	150	°C
Junction temperature	T_j	max.	150	°C

THERMAL RESISTANCE

From junction to ambient in free air mounted on a fibre-glass print (see Fig. 2) of 40 mm x 25 mm x 1 mm	$R_{th\ j\text{-}a}$	=	300	K/W

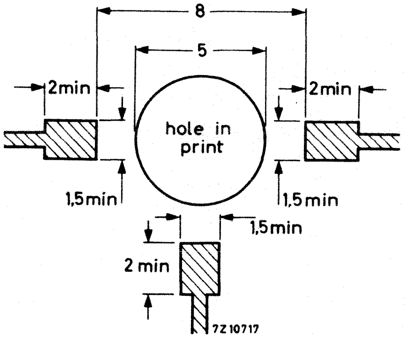

Fig. 2 Requirements for fibre-glass print. (Dimensions in mm.)

CHARACTERISTICS

T_j = 25 °C unless otherwise specified

Collector cut-off current $I_E = 0$; $V_{CB} = 5$ V	I_{CBO}	max.	50 nA
D.C. current gain $I_C = 30$ mA; $V_{CE} = 5$ V	h_{FE}	min. typ.	40 90
Transition frequency at f = 500 MHz $I_C = 30$ mA; $V_{CE} = 5$ V	f_T	typ.	6,0 GHz
Collector capacitance at f = 1 MHz $I_E = I_e = 0$; $V_{CB} = 10$ V	C_c	typ.	0,9 pF
Emitter capacitance at f = 1 MHz $I_C = I_c = 0$; $V_{EB} = 0{,}5$ V	C_e	typ.	2,5 pF
Feedback capacitance at f = 1 MHz $I_C = 0$; $V_{CE} = 10$ V; $T_{amb} = 25$ °C	C_{re}	typ.	0,6 pF
Noise figure at optimum source impedance $I_C = 4$ mA; $V_{CE} = 8$ V; f = 800 MHz; $T_{amb} = 25$ °C $I_C = 30$ mA; $V_{CE} = 8$ V; f = 800 MHz; $T_{amb} = 25$ °C	F F	typ. typ.	1,6 dB 2,3 dB

Maximum unilateral power gain (s_{re} assumed to be zero)

$$G_{UM} = 10 \log \frac{|s_{fe}|^2}{(1 - |s_{ie}|^2)\,(1 - |s_{oe}|^2)}$$

$I_C = 30$ mA; $V_{CE} = 8$ V; f = 800 MHz; $T_{amb} = 25$ °C	G_{UM}	typ.	14,0 dB

Output voltage at d_{im} = −60 dB (see Figs 3 and 14)
(DIN 45004B, par. 6.3: 3-tone)
I_C = 30 mA; V_{CE} = 8 V; R_L = 75 Ω; T_{amb} = 25 °C
$V_p = V_o$ at d_{im} = −60 dB; f_p = 795,25 MHz
$V_q = V_o$ −6 dB ; f_q = 803,25 MHz
$V_r = V_o$ −6 dB ; f_r = 805,25 MHz
Measured at $f_{(p+q-r)}$ = 793,25 MHz — V_o typ. 425 mV

Output voltage at d_2 = −50 dB (see Figs 3 and 15)
I_C = 30 mA; V_{CE} = 8 V; R_L = 75 Ω; T_{amb} = 25 °C
$V_p = V_o$ at d_2 = −50 dB; f_p = 250 MHz
$V_q = V_o$ at d_2 = −50 dB; f_q = 560 MHz
measured at $f_{(p+q)}$ = 810 MHz — V_o typ. 200 mV

Output power at 1 dB gain compression (see Fig. 3)
I_C = 30 mA; V_{CE} = 8V
R_L = 75 Ω; T_{amb} = 25 °C — P_{L1} typ. + 17 dBm
measured at f = 800 MHz

Third order intercept point (see Fig. 3)
I_C = 30 mA; V_{CE} = 8 V
R_L = 75 Ω; T_{amb} = 25 °C
P_p = ITO − 6 dB; f_p = 800 MHz
P_q = ITO − 6 dB; f_q = 801 MHz
measured at $f_{(2q-p)}$ = 802 MHz and
at $f_{(2p-q)}$ = 799 MHz — ITO typ. + 36 dBm

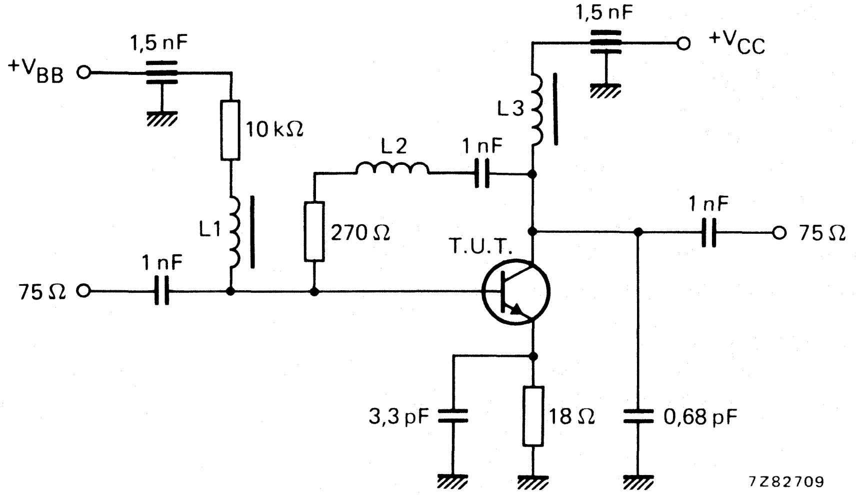

Fig. 3 Intermodulation distortion and second harmonic distortion test circuit.

L1 = L3 = 5 μH micro choke
L2 = 3 turns Cu wire (0,4 mm); internal diameter 3 mm; winding pitch 1 mm

s-parameters (common emitter) at V_{CE} = 8 V; T_{amb} = 25 °C; typical values.

The figures given in the tables below can also be used for operation at V_{CE} = 5 V. Only slight differences for the s-parameters may occur.

I_C mA	f MHz	s_{ie}	s_{re}	s_{fe}	s_{oe}	G_{UM} dB
2	40	0,89/ −12,9°	0,01/75°	9,5/166°	0,97/ −6,1°	38,7
	100	0,85/ −30,7°	0,03/70,6°	8,7/155°	0,94/−13,5°	33,7
	200	0,75/ −57,1°	0,05/61,5°	7,4/138°	0,87/−22,5°	27,1
	500	0,48/−113°	0,08/50,9°	4,4/106°	0,72/−34,2°	17,2
	800	0,37/−153°	0,09/51,9°	3,0/ 86,3°	0,64/−40,0°	12,5
	1000	0,34/−178°	0,10/55,0°	2,6/ 77,0°	0,61/−47,8°	10,9
	1200	0,34/+ 159°	0,11/58,5°	2,2/ 68,0°	0,58/−53,9°	9,2
5	40	0,79/ −18,4°	0,01/74°	17,8/162°	0,94/ −9,1°	38,6
	100	0,71/ −42,1°	0,03/67,1°	15,2/146°	0,87/−19,5°	32,8
	200	0,57/ −72,8°	0,04/60,0°	11,5/126°	0,75/−28,7°	26,5
	500	0,31/−127°	0,07/60,1°	5,8/ 98,2°	0,59/−36,1°	17,6
	800	0,25/−168°	0,09/63,6°	3,8/ 82,0°	0,54/−41,0°	13,4
	1000	0,25/+ 165°	0,11/65,2°	3,2/ 74,4°	0,51/−46,7°	11,7
	1200	0,26/+ 141°	0,13/66,1°	2,7/ 66,7°	0,49/−52,2°	10,1
10	40	0,67/ −25,3°	0,01/71°	27,9/156°	0,90/−12,8°	38,7
	100	0,55/ −55,1°	0,02/65,1°	21,8/136°	0,78/−25,6°	32,4
	200	0,40/ −88,2°	0,04/62,4°	14,7/116°	0,62/−33,4°	26,2
	500	0,20/−141°	0,06/68,3°	6,7/ 93,0°	0,51/−35,9°	18,0
	800	0,16/+ 177°	0,09/70,0°	4,3/ 79,3°	0,48/−40,3°	13,9
	1000	0,18/+ 151°	0,12/69,7°	3,5/ 72,5°	0,46/−44,2°	12,1
	1200	0,21/+ 130°	0,14/68,9°	3,0/ 65,1°	0,43/−50,7°	10,6
20	40	0,51/ −34,7°	0,01/69°	39,7/149°	0,84/−17,4°	38,6
	100	0,38/ −70,5°	0,02/65,8°	27,7/126°	0,66/−29,5°	32,0
	200	0,26/−104°	0,03/68,0°	16,8/109°	0,51/−32,5°	26,1
	500	0,16/−158°	0,06/74,0°	7,3/ 89,3°	0,45/−33,4°	18,4
	800	0,14/+ 155°	0,10/73,6°	4,6/ 77,5°	0,42/−39,1°	14,2
	1000	0,17/+ 133°	0,12/72,3°	3,8/ 71,2°	0,41/−43,6°	12,5
	1200	0,21/+ 115°	0,14/70,5°	3,2/ 64,4°	0,39/−51,0°	11,0
30	40	0,46/ −36,5°	0,01/73°	43,3/150°	0,87/−16,9°	39,9
	100	0,32/ −73,7°	0,02/69,2°	29,1/124°	0,66/−27,2°	32,2
	200	0,20/−109°	0,03/72,0°	17,1/106°	0,50/−28,1°	26,1
	500	0,14/−174°	0,06/75,6°	7,4/ 87,2°	0,41/−31,7°	18,3
	800	0,15/+ 143°	0,10/74,7°	4,8/ 74,9°	0,39/−41,0°	14,0
	1000	0,16/+ 124°	0,12/72,9°	3,9/ 70,5°	0,38/−42,8°	12,6
	1200	0,21/+ 111°	0,15/71,0°	3,3/ 63,8°	0,37/−51,0°	11,2

Conditions for Figs 4 and 5:
V_{CE} = 8 V; I_C = 30 mA;
T_{amb} = 25 °C; typical values.

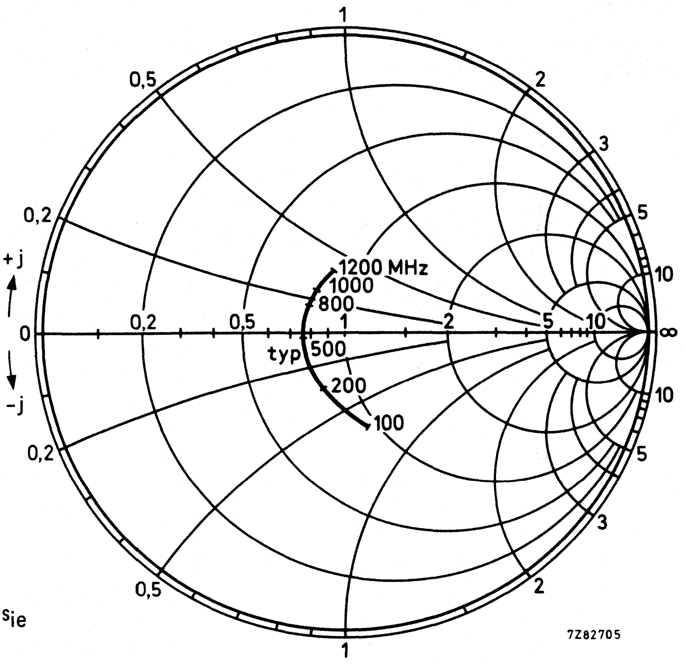

Fig. 4 Input impedance derived from input reflection coefficient s_{ie} co-ordinates in ohm x 50.

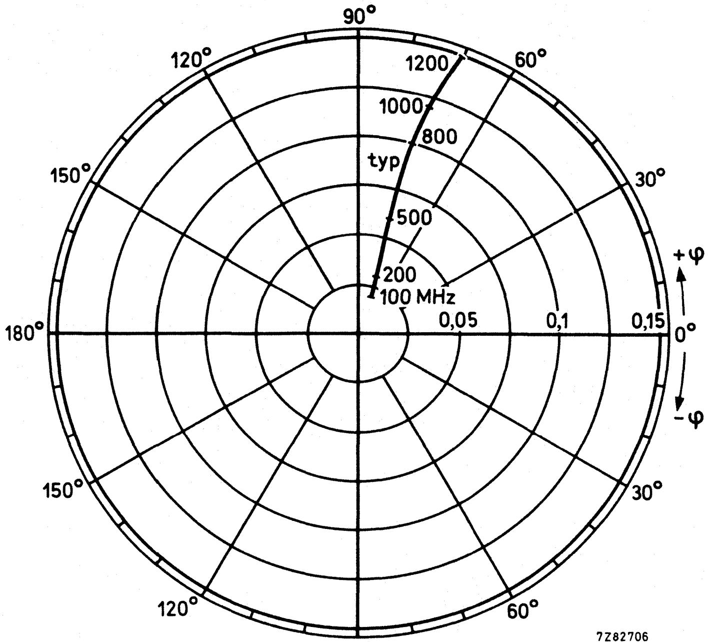

Fig. 5 Reverse transmission coefficient s_{re}.

Conditions for Figs 6 and 7:
V_{CE} = 8 V; I_C = 30 mA;
T_{amb} = 25 °C; typical values.

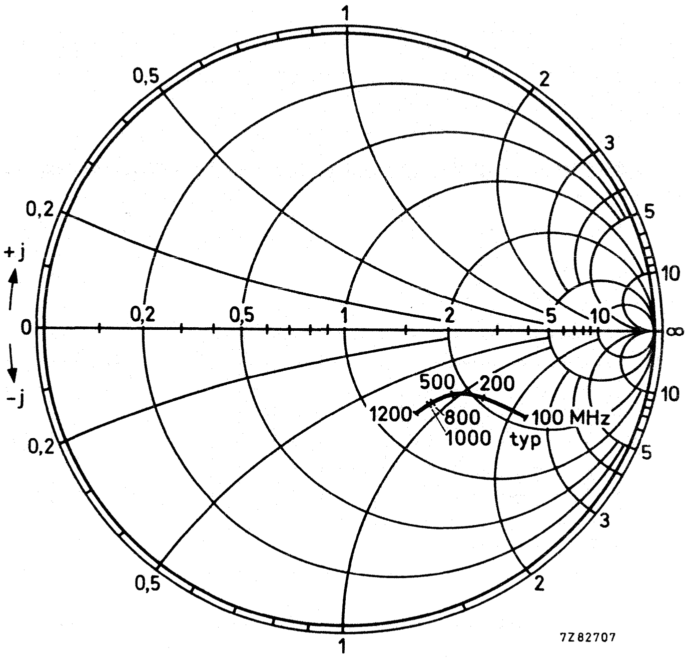

Fig. 6 Output impedance derived from output reflection coefficient s_{oe} co-ordinates in ohm x 50.

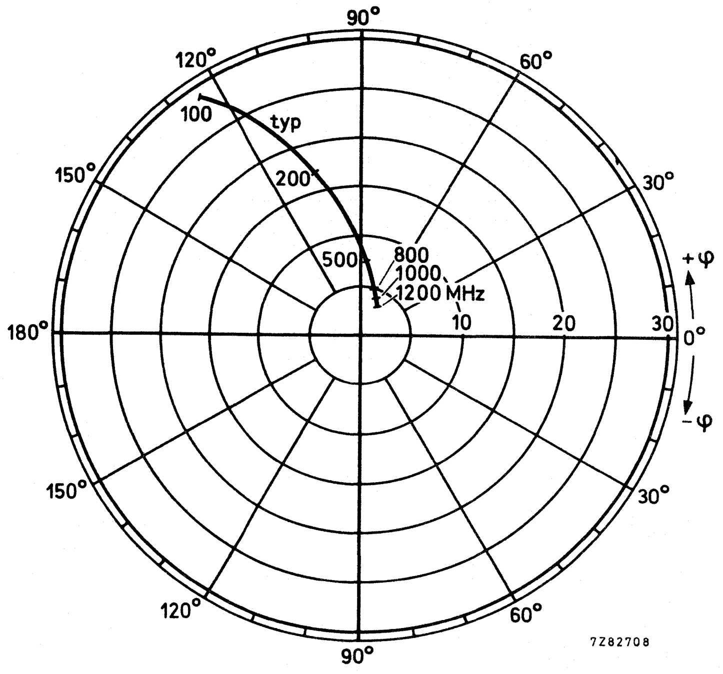

Fig. 7 Forward transmission coefficient s_{fe}.

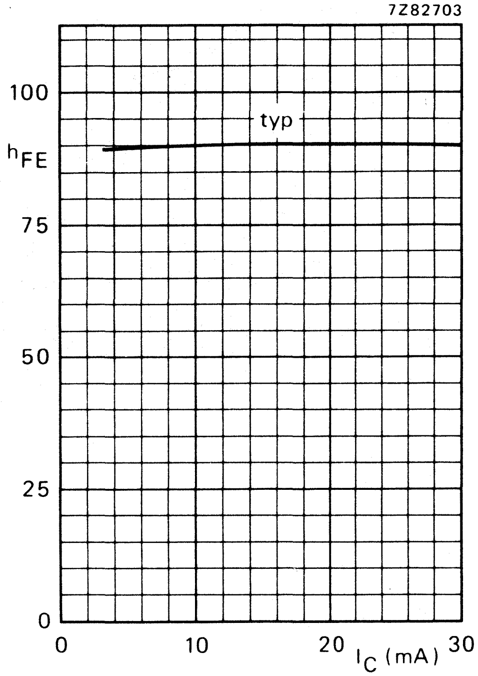

Fig. 8 V_{CE} = 5 V; T_j = 25 °C; typ. values.

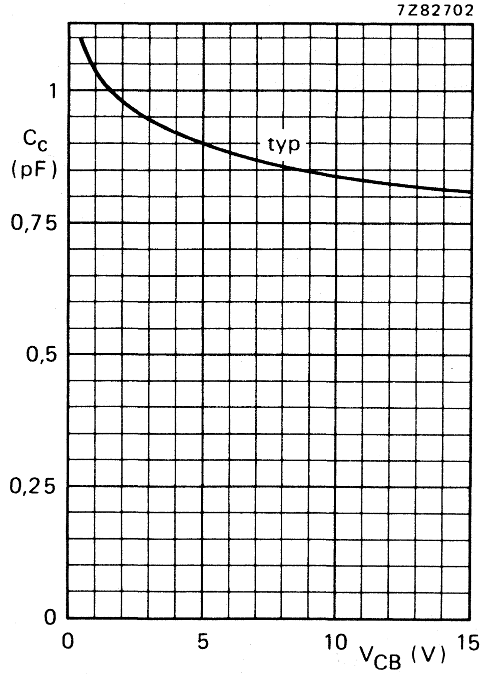

Fig. 9 $I_E = I_e = 0$; f = 1 MHz; T_j = 25 °C; typical values.

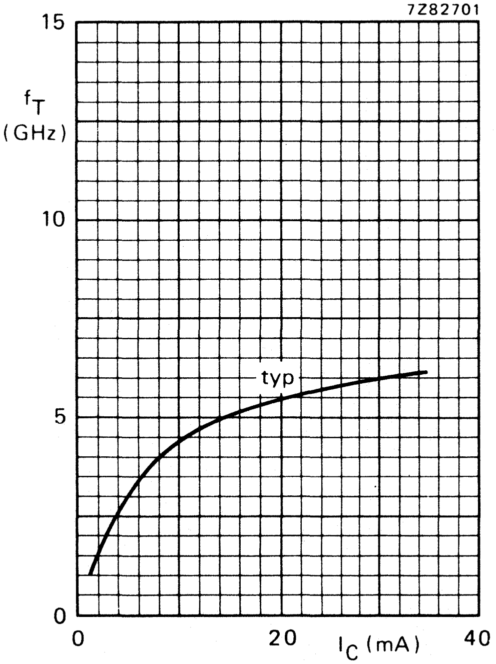

Fig. 10 V_{CE} = 5 V; f = 500 MHz; T_j = 25 °C; typical values.

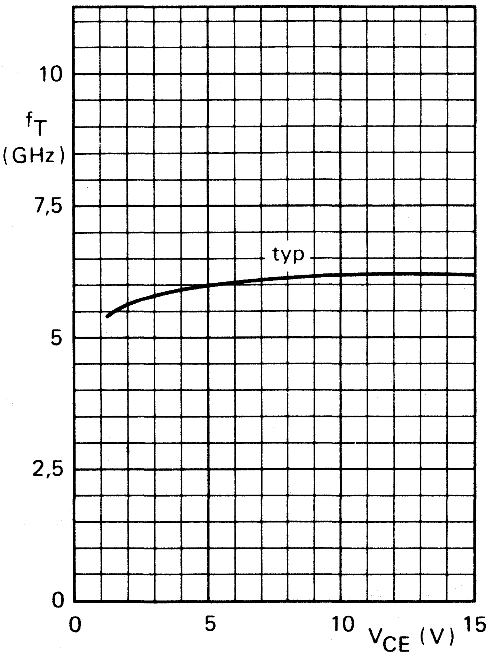

Fig. 11 I_C = 30 mA; f = 500 MHz; T_j = 25 °C; typical values.

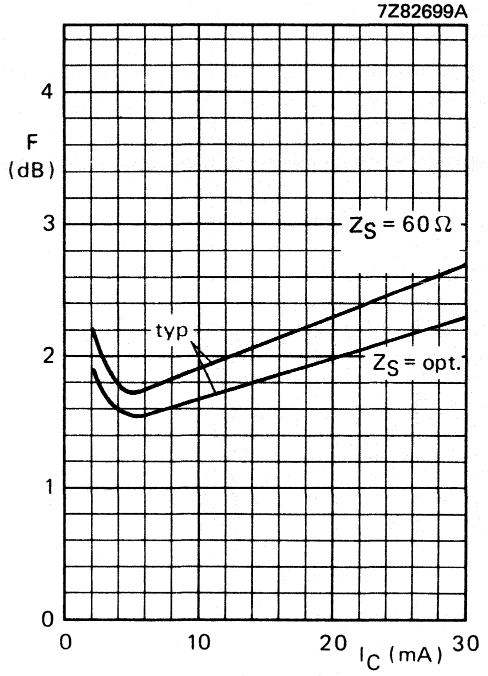

Fig. 12 $V_{CE} = 8$ V; f = 800 MHz; $T_{amb} = 25\ ^oC$; typ. values.

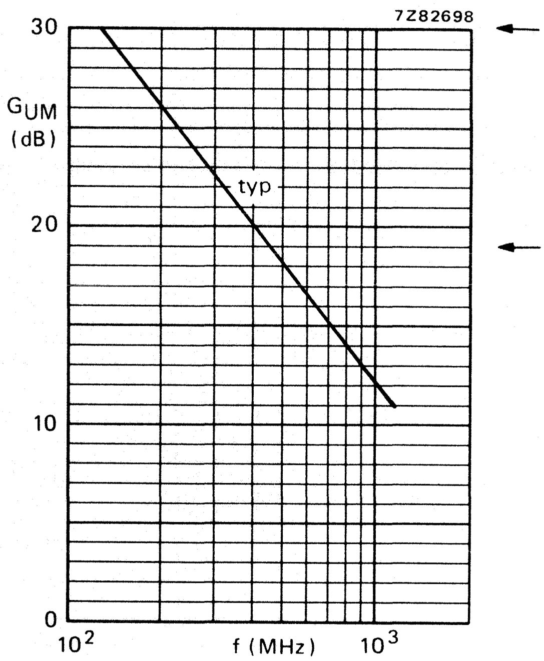

Fig. 13 $V_{CE} = 8$ V; $I_C = 30$ mA; $T_{amb} = 25\ ^oC$. typ. values.

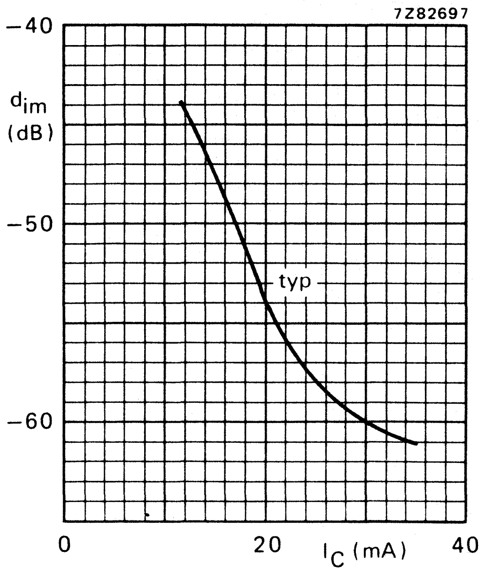

Fig. 14 $V_{CE} = 8$ V; $V_o = 425$ mV = 52,6 dBmV; $f_{(p+q-r)} = 793{,}25$ MHz; $T_{amb} = 25\ ^oC$; measured in test circuit (see Fig. 3); typical values.

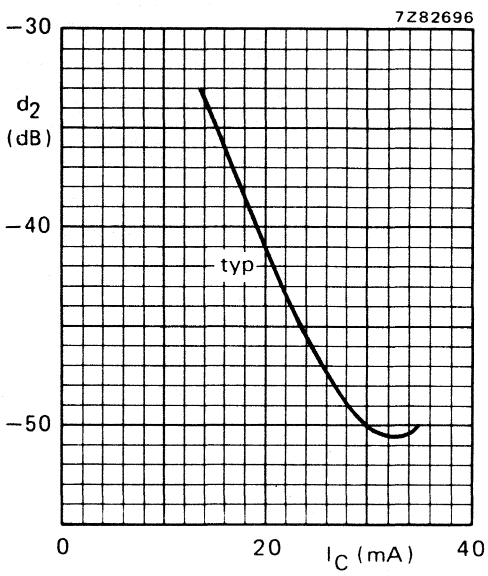

Fig. 15 $V_{CE} = 8$ V; $V_o = 200$ mV = 46 dBmV; $f_{(p+q)} = 810$ MHz; $T_{amb} = 25\ ^oC$; measured in test circuit (see Fig. 3); typical values.

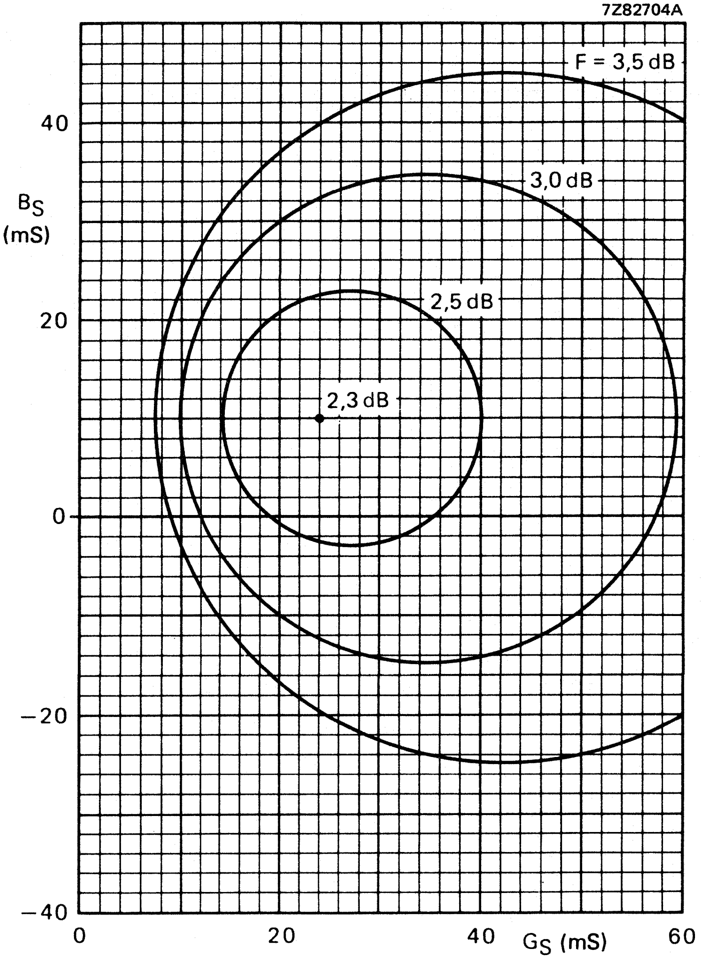

Fig. 16 Circles of constant noise figure.
V_{CE} = 8 V; I_C = 30 mA; f = 800 MHz;
T_{amb} = 25 °C; typical values.

CLASS-B OPERATION

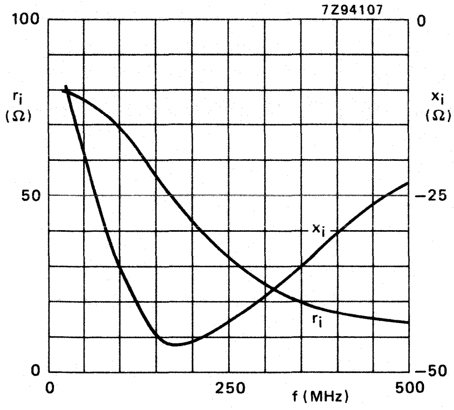

Fig. 17 Input impedance (series components).

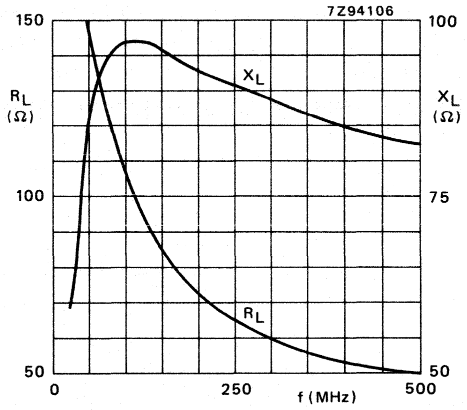

Fig. 18 Load impedance (series components).

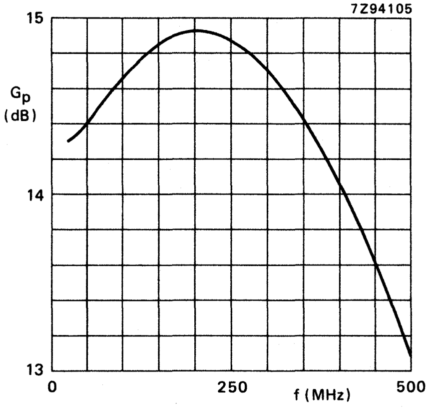

Fig. 19 Power gain versus frequency.

Conditions for Figs 17 to 19:

V_{CE} = 7,5 V; P_L = 160 mW; T_{amb} = 25 °C; typical values.

OPERATING NOTE for Figs 17 to 19:

A base-emitter resistor of 82 Ω is recommended to avoid oscillation. This resistor must be effective for r.f. only.

N-P-N 1 GHz WIDEBAND TRANSISTOR

N-P-N transistor in a plastic SOT-23 envelope. It is primarily intended for use in u.h.f. and microwave amplifiers in thick and thin-film circuits, such as in aerial amplifiers, radar systems, oscilloscopes, spectrum analysers etc. The transistor features low intermodulation distortion and high power gain; thanks to its very high transition frequency, it also has excellent wideband properties and low noise up to high frequencies.

P-N-P complement is BFT92.

QUICK REFERENCE DATA

Collector-base voltage (open emitter)	V_{CBO}	max.	20	V
Collector-emitter voltage (open base)	V_{CEO}	max.	15	V
Collector current (d.c.)	I_C	max.	25	mA
Total power dissipation up to T_{amb} = 60 °C	P_{tot}	max.	200	mW
Junction temperature	T_j	max.	150	°C
Transition frequency at f = 500 MHz I_C = 14 mA; V_{CE} = 10 V	f_T	typ.	5,0	GHz
Feedback capacitance at f = 1 MHz I_C = 2 mA; V_{CE} = 10 V	C_{re}	typ.	0,4	pF
Noise figure at optimum source impedance I_C = 2 mA; V_{CE} = 10 V; f = 500 MHz	F	typ.	2,4	dB
Max. unilateral power gain I_C = 14 mA; V_{CE} = 10 V; f = 500 MHz	G_{UM}	typ.	18,0	dB
Output voltage at d_{im} = −60 dB (see Fig. 2) I_C = 14 mA; V_{CE} = 10 V; R_L = 75 Ω; T_{amb} = 25 °C $f_{(p+q-r)}$ = 493,25 MHz	V_o	typ.	150	mV

MECHANICAL DATA

Dimensions in mm

Fig. 1 SOT-23.

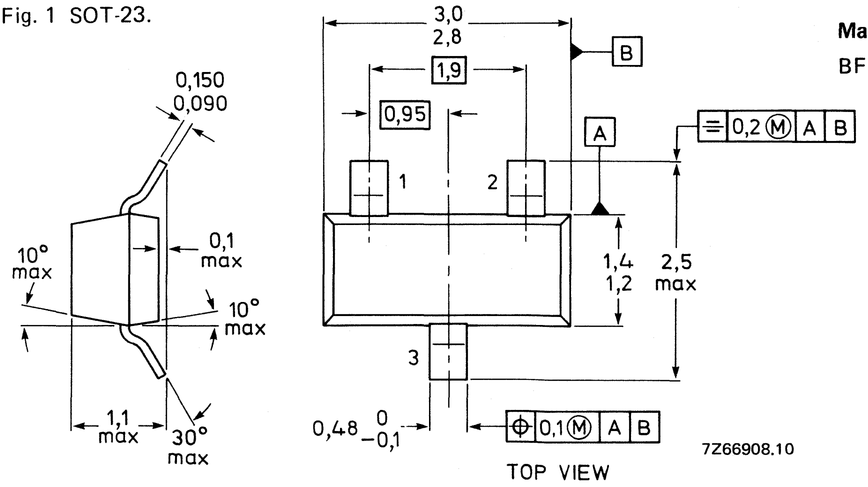

Marking code

BFR92 = P1

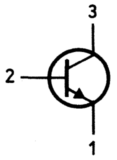

If required, the R-version (reverse pinning) is available on request.

RATINGS

Limiting values in accordance with the Absolute Maximum System (IEC 134)

Collector-base voltage (open emitter)	V_{CBO}	max.	20	V
Collector-emitter voltage (open base)	V_{CEO}	max.	15	V
Emitter-base voltage (open collector)	V_{EBO}	max.	2	V
Collector current (d.c.)	I_C	max.	25	mA
Total power dissipation up to T_{amb} = 60 °C**	P_{tot}	max.	200	mW
Storage temperature	T_{stg}		−65 to +150	°C
Junction temperature	T_j	max.	150	°C

THERMAL RESISTANCE*

From junction to ambient**	$R_{th\ j\text{-}a}$	=	430	K/W

CHARACTERISTICS

T_j = 25 °C unless otherwise specified

	Collector cut-off current $I_E = 0$; $V_{CB} = 10$ V	I_{CBO}	max.	50	nA
→	D.C. current gain $I_C = 14$ mA; $V_{CE} = 10$ V	h_{FE}	min.	25	
			typ.	50	
→	Transition frequency at f = 500 MHz $I_C = 14$ mA; $V_{CE} = 10$ V	f_T	typ.	5,0	GHz
	Collector capacitance at f = 1 MHz $I_E = I_e = 0$; $V_{CB} = 10$ V	C_c	typ.	0,75	pF
	Emitter capacitance at f = 1 MHz $I_C = I_c = 0$; $V_{EB} = 0{,}5$ V	C_e	typ.	0,8	pF
→	Feedback capacitance at f = 1 MHz $I_C = 2$ mA; $V_{CE} = 10$ V; $T_{amb} = 25$ °C	C_{re}	typ.	0,4	pF

→

---

* See *Thermal characteristics.*

** Mounted on a ceramic substrate of 8 mm x 10 mm x 0,7 mm.

Noise figure at optimum source impedance*

$I_C = 2$ mA; $V_{CE} = 10$ V; f = 500 MHz; $T_{amb} = 25$ °C	F	typ.	2,4 dB

Max. unilateral power gain (s_{re} assumed to be zero)

$$G_{UM} = 10 \log \frac{|s_{fe}|^2}{[1-|s_{ie}|^2]\,[1-|s_{oe}|^2]}$$

$I_C = 14$ mA; $V_{CE} = 10$ V; f = 500 MHz; $T_{amb} = 25$ °C	G_{UM}	typ.	18,0 dB

Output voltage at $d_{im} = -60$ dB (see Fig. 2) ←

(DIN 45004B; par. 6.3.: 3-tone)

$I_C = 14$ mA; $V_{CE} = 10$ V; $R_L = 75\ \Omega$

$V_p = V_o$ at $d_{im} = -60$ dB ; $f_p = 495{,}25$ MHz

$V_q = V_o -6$ dB ; $f_q = 503{,}25$ MHz

$V_r = V_o -6$ dB ; $f_r = 505{,}25$ MHz

measured at $f_{(p+q-r)} = 493{,}25$ MHz	V_o	typ.	150 mV

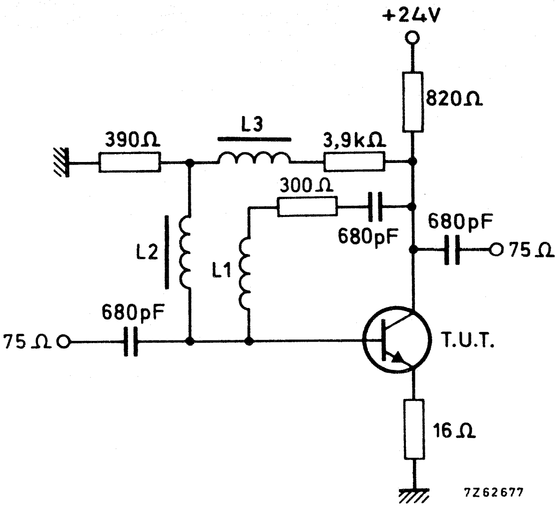

Fig. 2 Intermodulation test circuit.

L1 = 4 turns Cu wire (0,35 mm); winding pitch 1 mm; int. dia. 4 mm

L2 = L3 = 5 μH (code number: 3122 108 20150)

---

* Crystal mounted in a BFR90 envelope.

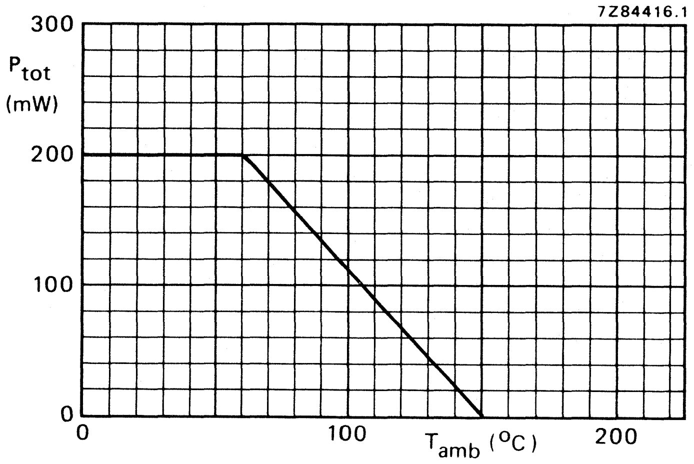

Fig. 3 Power derating curve.

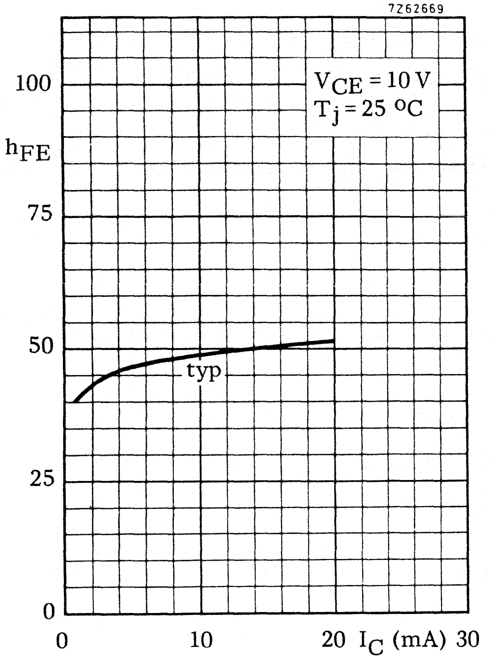

Fig. 4 V_{CE} = 10 V; T_j = 25 °C; typical values.

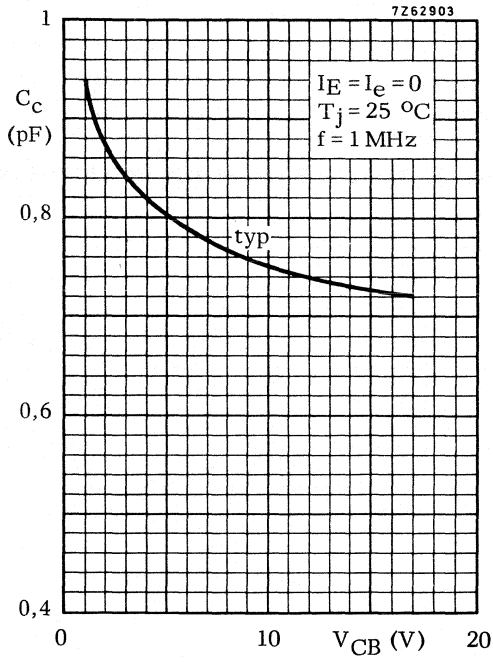

Fig. 5 $I_E = I_e = 0$; f = 1 MHz; T_j = 25 °C; typical values.

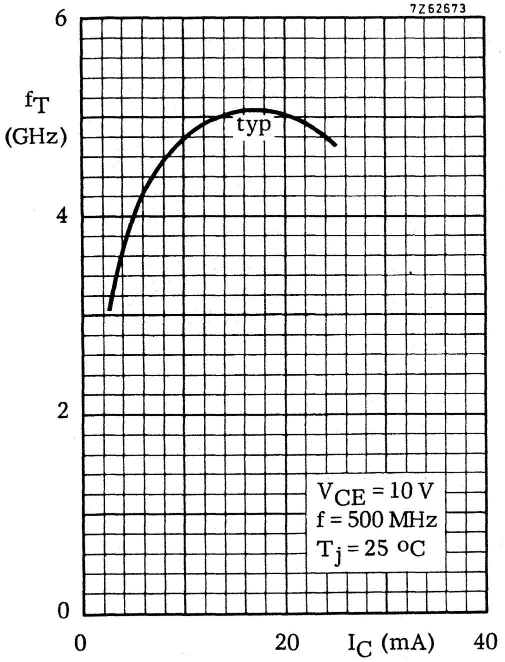

Fig. 6 V_{CE} = 10 V; f = 500 MHz; T_j = 25 °C; typical values.

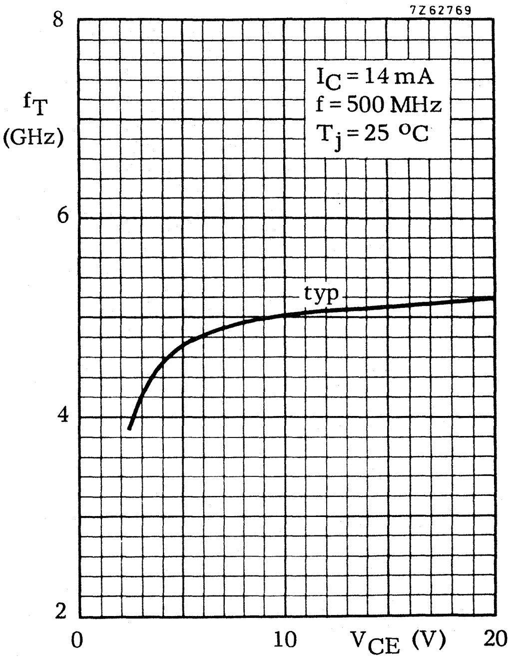

Fig. 7 I_C = 14 mA; f = 500 MHz; T_j = 25 °C; typical values.

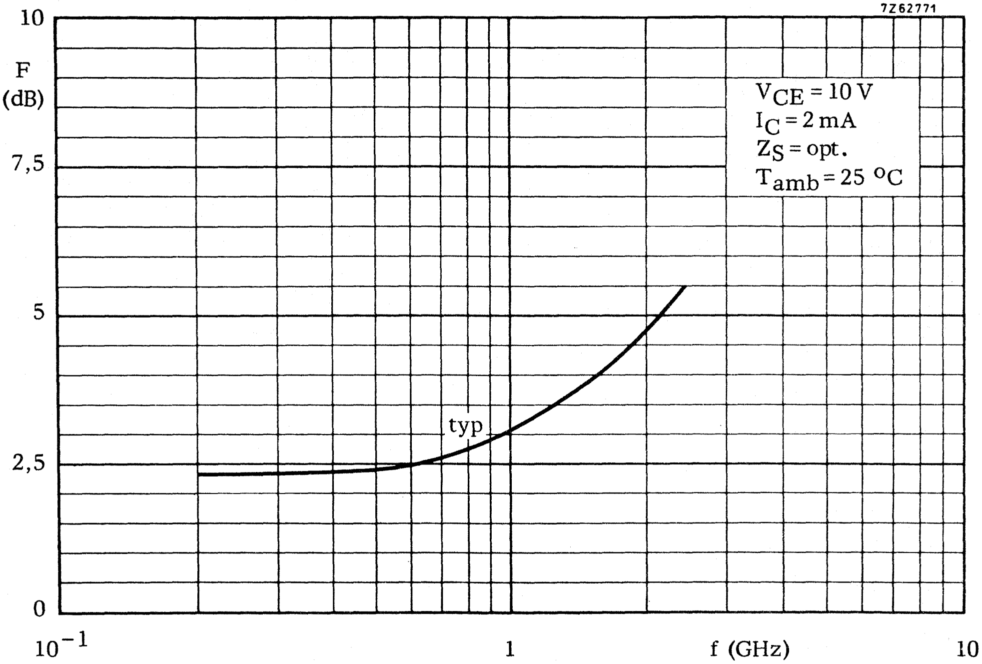

Fig. 8 V_{CE} = 10 V; I_C = 2 mA; Z_S = opt.; T_{amb} = 25 °C; typical values.

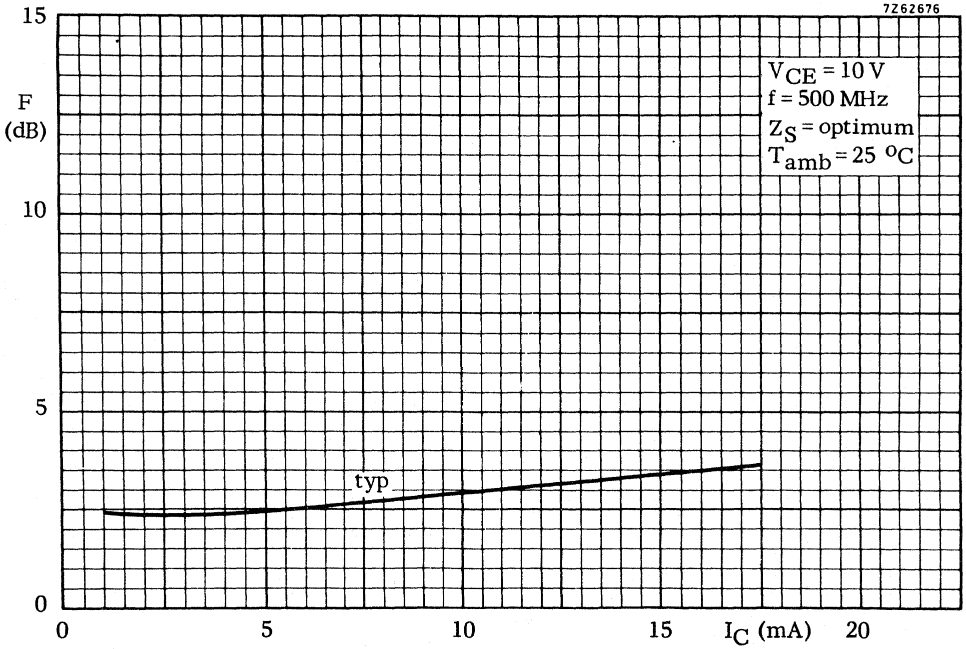

Fig. 9 V_{CE} = 10 V; f = 500 MHz; Z_S = opt.; T_{amb} = 25 °C; typical values.

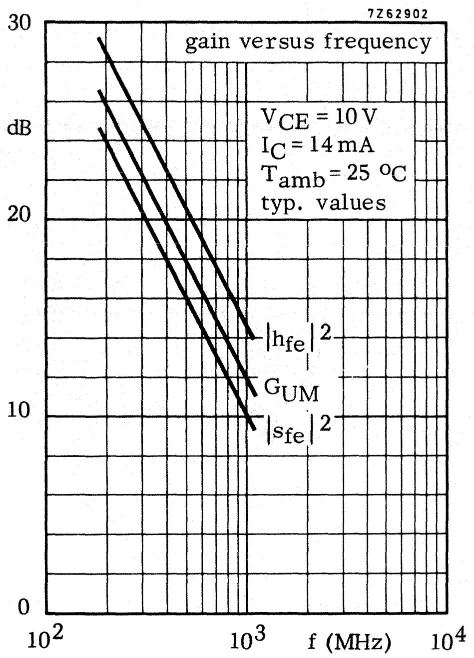

Fig. 10 $V_{CE} = 10$ V; $I_C = 14$ mA; $T_{amb} = 25$ °C; typical values.

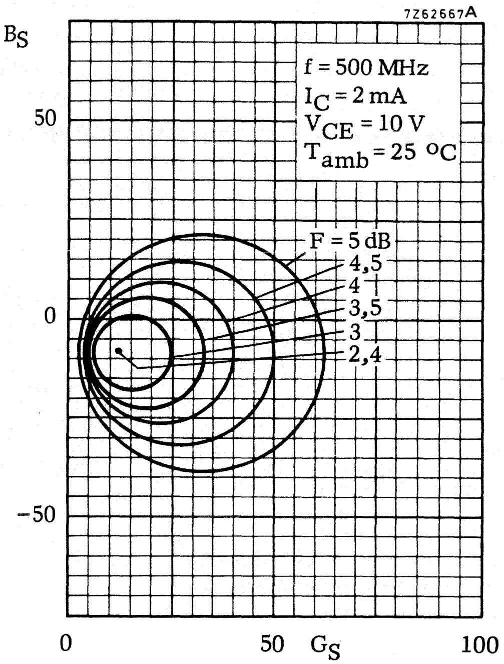

Fig. 11 Circles of constant noise figure; $V_{CE} = 10$ V; $I_C = 2$ mA; f = 500 MHz; $T_{amb} = 25$ °C; typical values.

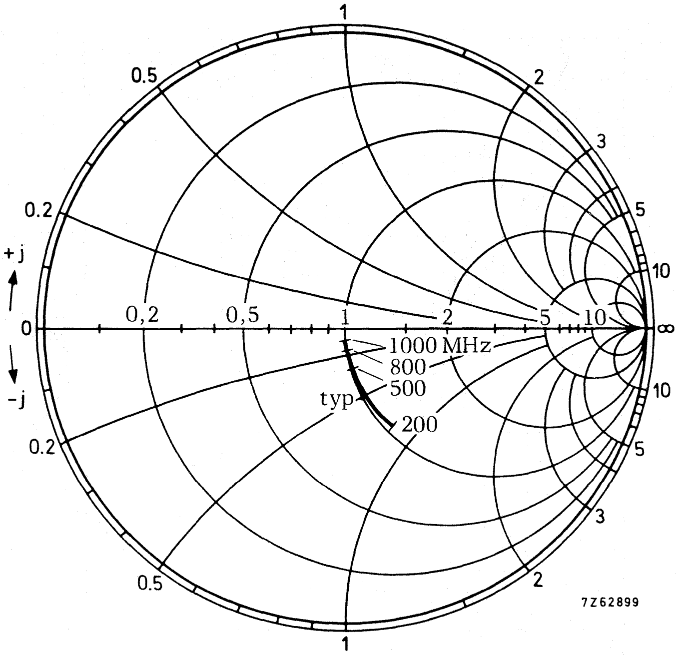

Fig. 12 V_{CE} = 10 V; I_C = 14 mA; T_{amb} = 25 °C; typical values.

Input impedance derived from input reflection coefficient s_{ie} coordinates in ohm x 50

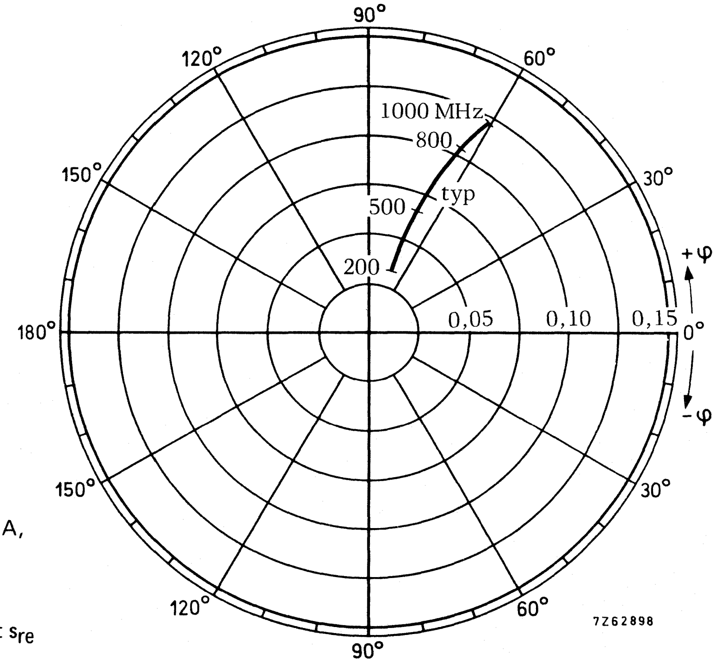

Fig. 13 V_{CE} = 10 V; I_C = 14 mA, T_{amb} = 25 °C; typical values.

Reverse transmission coefficient s_{re}

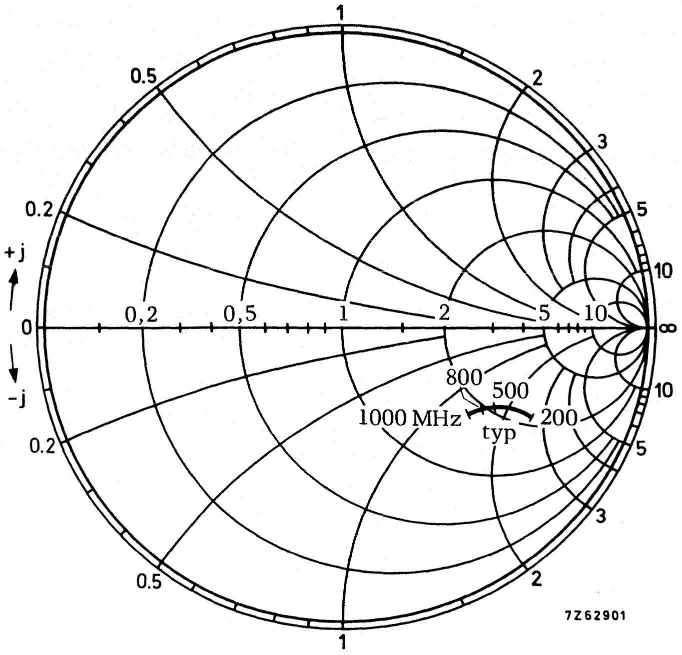

Fig. 14 V_{CE} = 10 V; I_C = 14 mA; T_{amb} = 25 °C; typical values.

Output impedance derived from output reflection coefficient s_{oe} coordinates in ohm x 50

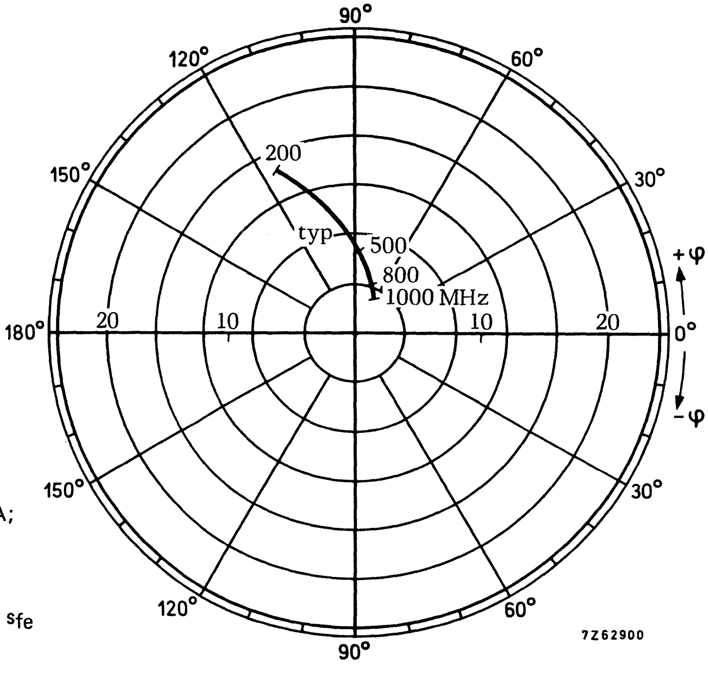

Fig. 15 V_{CE} = 10 V; I_C = 14 mA; T_{amb} = 25 °C; typical values.

Forward transmission coefficient s_{fe}

N-P-N 1 GHz WIDEBAND TRANSISTOR

N-P-N transistor in a plastic SOT-23 envelope. It is primarily intended for use in v.h.f./u.h.f. broadband amplifiers. The transistor features:

- low noise;
- low intermodulation distortion;
- high power gain.

P-N-P complement is BFT92

QUICK REFERENCE DATA

Collector-base voltage (open emitter)	V_{CBO}	max.	20	V
Collector-emitter voltage (open-base)	V_{CEO}	max.	15	V
Collector current (d.c.)	I_C	max.	25	mA
Total power dissipation up to T_{amb} = 60 °C	P_{tot}	max.	200	mW
Junction temperature	T_j	max.	150	°C
Transition frequency at f = 500 MHz I_C = 14 mA; V_{CE} = 10 V	f_T	typ.	5,0	GHz
Feedback capacitance at f = 1 MHz I_C = 0; V_{CE} = 10 V	C_{re}	typ.	0,35	pF
Noise figure at R_S = 60 Ω I_C = 4 mA; V_{CE} = 10 V; f = 800 MHz	F	typ.	1,8	dB
Output voltage at d_{im} = −60 dB I_C = 14 mA; V_{CE} = 10 V; R_L = 75 Ω $f_{(p+q-r)}$ = 793,25 MHz	V_o	typ.	150	mV

MECHANICAL DATA

Dimensions in mm

Fig. 1 SOT-23.

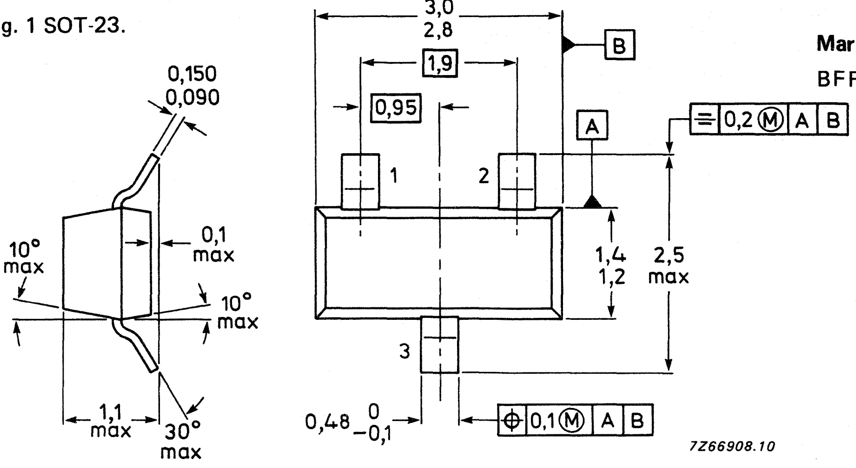

Marking code

BFR92A = P2

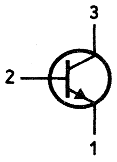

TOP VIEW

If required, the R-version (reverse pinning) is available on request.

RATINGS

Limiting values in accordance with the Absolute Maximum System (IEC 134)

Collector-base voltage (open emitter)	V_{CBO}	max.	20	V
Collector-emitter voltage (open base)	V_{CEO}	max.	15	V
Emitter-base voltage (open collector)	V_{EBO}	max.	2,0	V
Collector current (d.c.)	I_C	max.	25	mA
Total power dissipation up to T_{amb} = 60 °C**	P_{tot}	max.	200	mW
Storage temperature	T_{stg}		−65 to +150	°C
Junction temperature	T_j	max.	150	°C

THERMAL RESISTANCE*

From junction to ambient**	$R_{th\ j\text{-}a}$	=	430	K/W

CHARACTERISTICS

T_j = 25 °C unless otherwise specified

Collector cut-off current $I_E = 0$; $V_{CB} = 10$ V	I_{CBO}	max.	60	nA
D.C. current gain $I_C = 14$ mA; $V_{CE} = 10$ V	h_{FE}	min.	40	
		typ.	90	
Transition frequency at f = 500 MHz $I_C = 14$ mA; $V_{CE} = 10$ V	f_T	typ.	5,0	GHz
Collector capacitance at f = 1 MHz $I_E = I_e = 0$; $V_{CB} = 10$ V	C_c	typ.	0,6	pF
Emitter capacitance at f = 1 MHz $I_C = I_c = 0$; $V_{EB} = 0{,}5$ V	C_e	typ.	1,2	pF
Feedback capacitance at f = 1 MHz $I_C = 0$; $V_{CE} = 10$ V; $T_{amb} = 25$ °C	C_{re}	typ.	0,35	pF
Noise figure at $T_{amb} = 25$ °C $I_C = 4$ mA; $V_{CE} = 10$ V; $R_S = 60\ \Omega$; f = 800 MHz	F	typ.	1,8	dB

Maximum unilateral power gain (s_{re} assumed to be zero)

$$G_{UM} = 10 \log \frac{|s_{fe}|^2}{[1-|s_{ie}|^2]\,[1-|s_{oe}|^2]}$$

$I_C = 14$ mA; $V_{CE} = 10$ V; f = 800 MHz; $T_{amb} = 25$ °C	G_{UM}	typ.	15,5	dB

---

* See *Thermal characteristics.*

** Mounted on a ceramic substrate of 8 mm x 10 mm x 0,7 mm.

Output voltage at d_{im} = −60 dB (see Figs 2 and 17)*
(DIN 45004B, par. 6.3: 3-tone)
I_C = 14 mA; V_{CE} = 10 V; R_L = 75 Ω; VSWR < 2; T_{amb} = 25 °C
$V_p = V_o$ at d_{im} = −60 dB; f_p = 795,25 MHz
$V_q = V_o$ −6 dB ; f_q = 803,25 MHz
$V_r = V_o$ −6 dB ; f_r = 805,25 MHz
Measured at $f_{(p+q-r)}$ = 793,25 MHz — V_o typ. 150 mV

Second harmonic distortion (see Figs 2 and 18)*
I_C = 14 mA; V_{CE} = 10 V; R_L = 75 Ω; VSWR < 2; T_{amb} = 25 °C
V_p = 60 mV at f_p = 250 MHz
V_q = 60 mV at f_q = 560 MHz
measured at $f_{(p+q)}$ = 810 MHz — d_2 typ. −50 dB

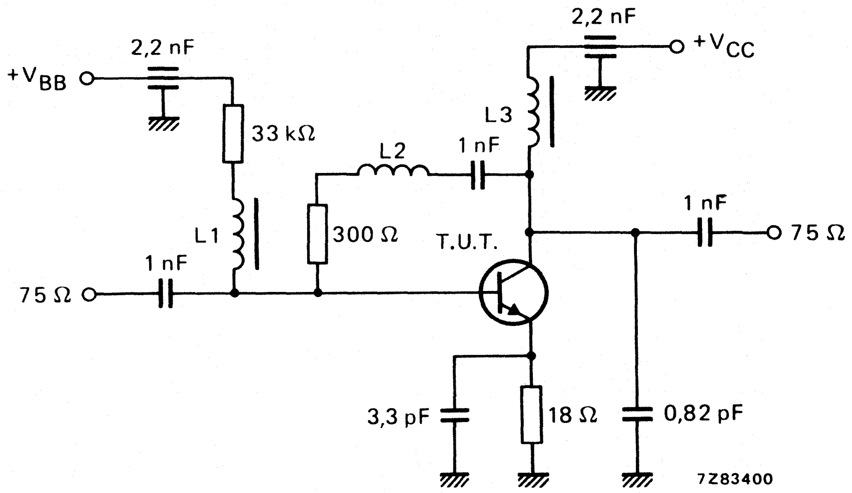

Fig. 2 Intermodulation distortion and second harmonic distortion MATV test circuit.

L1 = L3 = 5 μH micro choke
L2 = 3 turns Cu wire (0,4 mm); internal diameter 3 mm; winding pitch 1 mm

---

* Measured on same crystal in a SOT-37 envelope (BFR90A).

→ **s-parameters** (common emitter) at V_{CE} = 5 V; T_{amb} = 25 °C; typical values.

I_C mA	f MHz	s_{ie}	s_{re}	s_{fe}	s_{oe}
2	40	0,88/ −8,9°	0,009/83,6°	6,7/174,2°	1,00/ −2,7°
	100	0,86/ −21,9°	0,022/78,3°	6,5/164,2°	0,98/ −6,6°
	200	0,80/ −42,2°	0,041/69,0°	6,0/149,2°	0,94/−12,2°
	500	0,61/ −87,2°	0,073/54,9°	4,2/119,1°	0,81/−20,2°
	800	0,48/−117,4°	0,086/52,7°	3,1/100,5°	0,74/−22,9°
	1000	0,44/−133,8°	0,092/54,2°	2,6/ 91,4°	0,71/−24,2°
	1200	0,41/−147,6°	0,099/57,5°	2,2/ 84,3°	0,70/−25,7°
5	40	0,75/ −14,4°	0,008/81,8°	14,4/170,2°	0,99/ −4,9°
	100	0,70/ −34,0°	0,020/74,2°	13,3/155,3°	0,94/−11,2°
	200	0,60/ −61,7°	0,034/65,0°	10,9/135,8°	0,84/−17,9°
	500	0,40/−111,1°	0,057/61,1°	6,2/106,9°	0,67/−21,9°
	800	0,32/−139,7°	0,074/65,5°	4,2/ 92,4°	0,62/−22,2°
	1000	0,30/−153,2°	0,086/68,2°	3,4/ 85,3°	0,61/−22,8°
	1200	0,29/−166,2°	0,100/70,9°	2,9/ 79,6°	0,60/−24,0°
10	40	0,61/ −21,1°	0,008/79,7°	22,9/165,2°	0,97/ −7,3°
	100	0,54/ −48,5°	0,017/71,4°	19,8/145,8°	0,88/−15,5°
	200	0,42/ −82,1°	0,028/65,2°	14,4/124,7°	0,74/−20,8°
	500	0,30/−132,3°	0,050/69,0°	7,1/ 99,6°	0,59/−20,5°
	800	0,26/−158,0°	0,072/73,7°	4,7/ 87,8°	0,56/−20,3°
	1000	0,25/−168,3°	0,088/75,2°	3,8/ 82,2°	0,56/−20,9°
	1200	0,25/−179,3°	0,104/76,6°	3,2/ 77,5°	0,55/−22,1°
14	40	0,53/ −26,0°	0,007/78,6°	27,7/162,4°	0,96/ −8,7°
	100	0,45/ −58,1°	0,016/70,5°	22,6/140,7°	0,85/−17,2°
	200	0,36/ −94,4°	0,025/66,6°	15,6/119,7°	0,70/−21,0°
	500	0,27/−142,8°	0,049/72,5°	7,3/ 96,9°	0,57/−19,1°
	800	0,25/−166,0°	0,072/76,5°	4,7/ 86,1°	0,55/−19,1°
	1000	0,24/−174,8°	0,088/77,4°	3,8/ 80,5°	0,55/−19,9°
	1200	0,24/ 174,8°	0,105/78,4°	3,2/ 76,2°	0,54/−21,3°
20	40	0,45/ −33,1°	0,007/77,0°	32,3/158,8°	0,94/−10,1°
	100	0,38/ −71,8°	0,015/69,5°	24,7/135,0°	0,80/−18,4°
	200	0,31/−110,6°	0,023/68,3°	16,0/114,6°	0,66/−20,1°
	500	0,26/−154,5°	0,047/75,5°	7,2/ 94,3°	0,56/−17,3°
	800	0,25/−174,2°	0,071/78,7°	4,7/ 84,3°	0,55/−17,8°
	1000	0,25/ 178,5°	0,088/79,3°	3,7/ 79,1°	0,54/−18,9°
	1200	0,26/ 169,9°	0,104/80,0°	3,2/ 74,9°	0,54/−20,5°

s-parameters (common emitter) at V_{CE} = 10 V; T_{amb} = 25 °C; typical values.

I_C mA	f MHz	s_{ie}	s_{re}	s_{fe}	s_{oe}
2	40	0,89/ −8,7°	0,008/83,6°	6,8/174,4°	1,00/ −2,5°
	100	0,86/ −21,2°	0,021/78,5°	6,5/164,6°	0,98/ −6,1°
	200	0,80/ −40,9°	0,038/69,5°	6,0/149,6°	0,94/−11,3°
	500	0,61/ −85,3°	0,069/55,8°	4,3/119,8°	0,82/−18,7°
	800	0,48/−115,4°	0,081/53,8°	3,1/101,2°	0,75/−21,3°
	1000	0,44/−131,4°	0,086/55,5°	2,6/ 92,1°	0,73/−22,5°
	1200	0,40/−145,6°	0,093/58,9°	2,2/ 85,0°	0,72/−23,9°
5	40	0,77/ −13,6°	0,008/81,8°	14,2/170,5°	0,99/ −4,5°
	100	0,73/ −32,3°	0,019/74,7°	13,2/155,8°	0,95/−10,3°
	200	0,62/ −58,8°	0,032/65,6°	11,0/136,8°	0,85/−16,6°
	500	0,41/−107,2°	0,054/61,4°	6,3/107,7°	0,69/−20,4°
	800	0,32/−135,9°	0,071/65,9°	4,2/ 92,9°	0,64/−20,8°
	1000	0,30/−150,0°	0,082/68,6°	3,5/ 86,1°	0,63/−21,3°
	1200	0,28/−162,9°	0,095/71,5°	2,9/ 80,5°	0,62/−22,4°
10	40	0,66/ −19,4°	0,007/80,1°	22,5/165,9°	0,97/ −6,6°
	100	0,58/ −44,7°	0,017/71,8°	19,5/147,0°	0,90/−14,1°
	200	0,45/ −76,2°	0,027/65,4°	14,5/126,0°	0,76/−19,3°
	500	0,29/−125,1°	0,049/68,7°	7,2/100,6°	0,62/−19,2°
	800	0,24/−151,8°	0,070/73,5°	4,7/ 88,8°	0,59/−19,0°
	1000	0,24/−162,9°	0,084/75,2°	3,8/ 82,6°	0,58/−19,7°
	1200	0,23/−174,8°	0,099/76,8°	3,2/ 78,3°	0,58/−20,9°
14	40	0,60/ −23,2°	0,007/78,6°	27,2/163,0°	0,96/ −7,9°
	100	0,51/ −52,5°	0,016/70,6°	22,6/141,8°	0,86/−15,8°
	200	0,38/ −86,2°	0,025/66,4°	15,7/120,7°	0,72/−19,6°
	500	0,26/−134,3°	0,047/72,0°	7,5/ 97,8°	0,60/−18,0°
	800	0,22/−159,3°	0,069/76,2°	4,8/ 86,8°	0,57/−18,0°
	1000	0,22/−169,0°	0,085/77,3°	3,9/ 81,3°	0,57/−18,7°
	1200	0,22/ 179,8°	0,100/78,5°	3,3/ 76,8°	0,57/−20,1°
20	40	0,54/ −28,2°	0,007/77,4°	31,7/159,9°	0,95/ −9,1°
	100	0,45/ −61,7°	0,015/69,5°	24,7/136,8°	0,82/−16,8°
	200	0,33/ −97,5°	0,023/67,5°	16,3/116,2°	0,68/−18,8°
	500	0,24/−143,7°	0,046/74,4°	7,4/ 95,3°	0,59/−16,4°
	800	0,22/−166,4°	0,069/78,0°	4,8/ 85,2°	0,57/−16,9°
	1000	0,22/−174,7°	0,084/78,7°	3,8/ 80,1°	0,57/−17,8°
	1200	0,22/ 176,3°	0,100/79,7°	3,3/ 76,0°	0,57/−19,4°

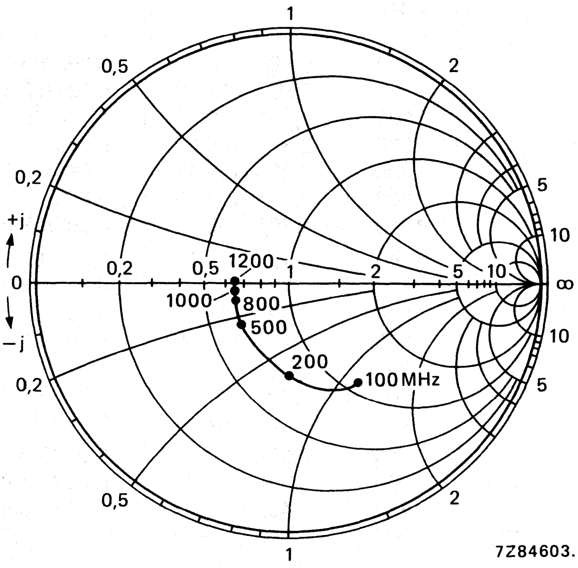

Fig. 3 Input impedance derived from input reflection coefficient s_{ie} co-ordinates in ohm x 50. V_{CE} = 10 V; I_C = 14 mA; T_{amb} = 25 °C; typical values.

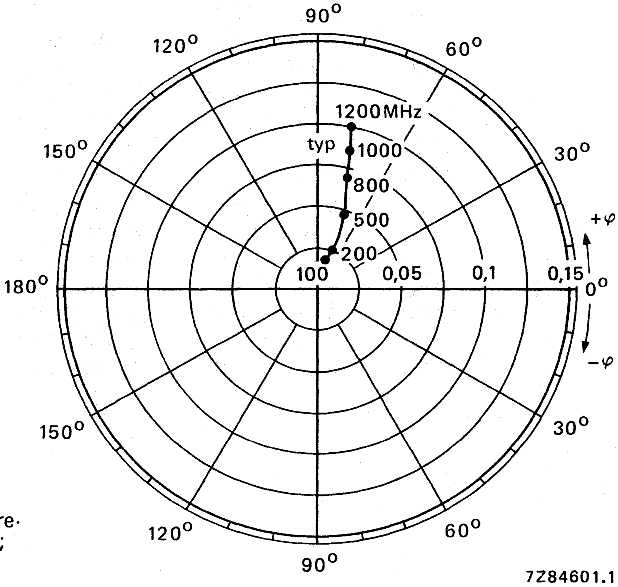

Fig. 4 Reverse transmission coefficient s_{re}. V_{CE} = 10 V; I_C = 14 mA; T_{amb} = 25 °C; typical values.

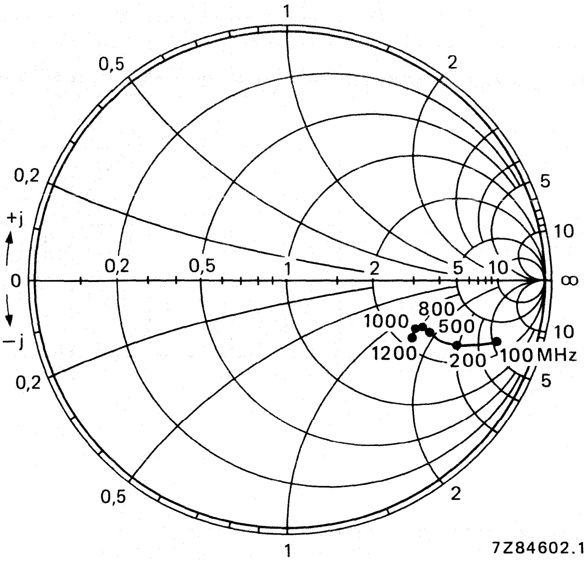

Fig. 5 Output impedance derived from output reflection coefficient s_{oe} co-ordinates in ohm x 50.
V_{CE} = 10 V; I_C = 14 mA; T_{amb} = 25 °C; typical values.

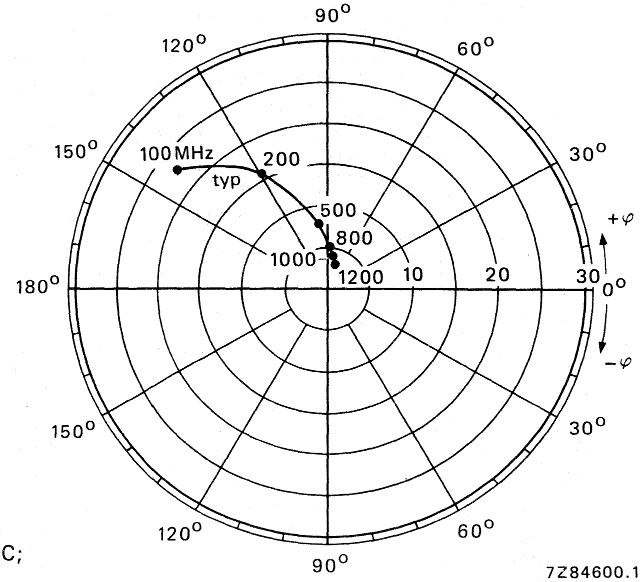

Fig. 6 Forward transmission coefficient s_{fe}.
V_{CE} = 10 V; I_C = 14 mA; T_{amb} = 25 °C; typical values.

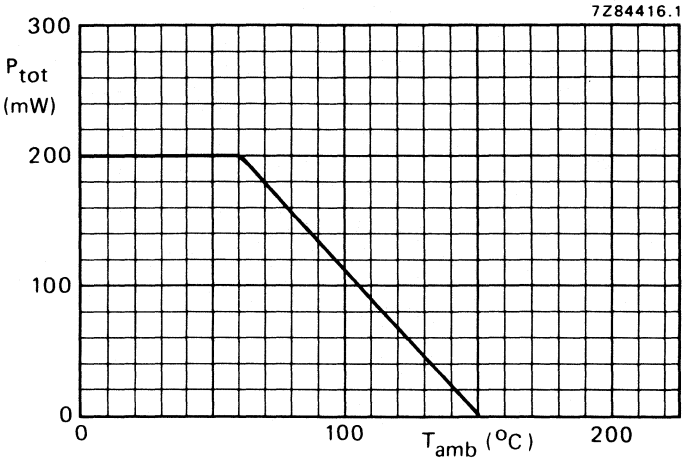

Fig. 7 Power derating curve.

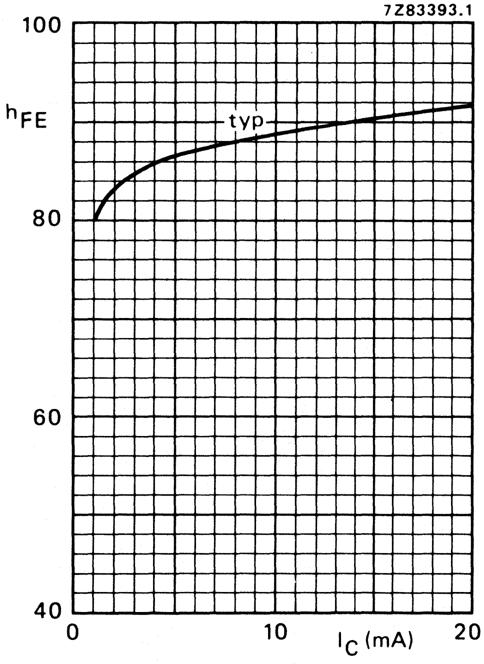

Fig. 8 V_{CE} = 10 V; T_j = 25 °C; typical values.

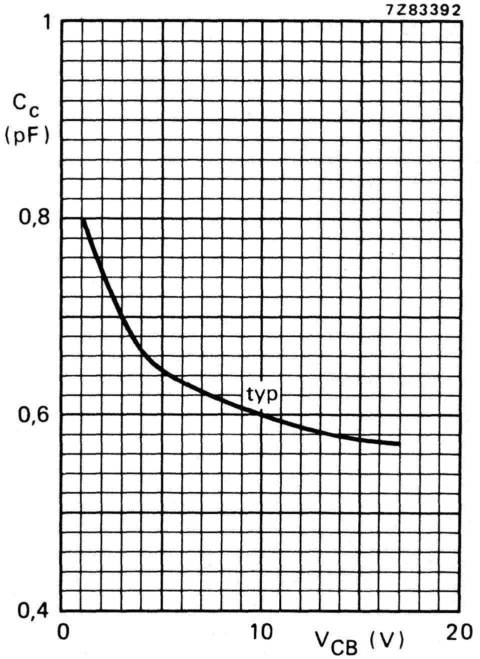

Fig. 9 $I_E = I_e = 0$; f = 1 MHz; T_j = 25 °C; typical values.

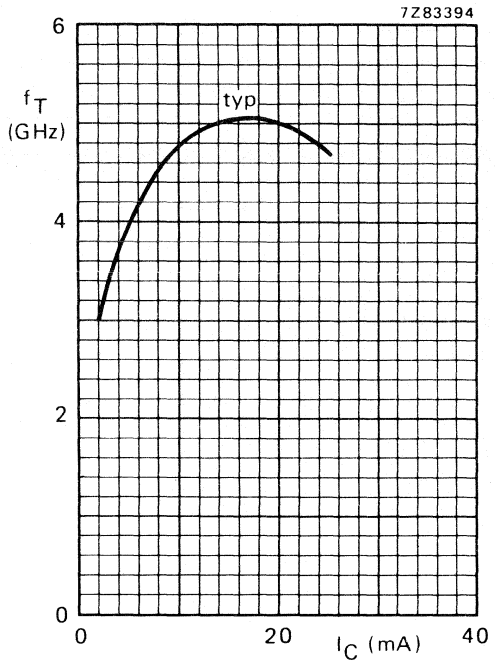

Fig. 10 V_{CE} = 10 V; f = 500 MHz; T_j = 25 °C; typical values.

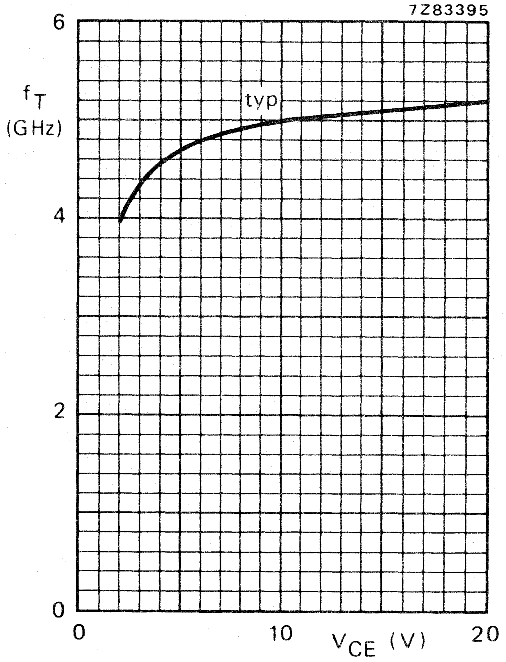

Fig. 11 I_C = 14 mA; f = 500 MHz; T_j = 25 °C; typical values.

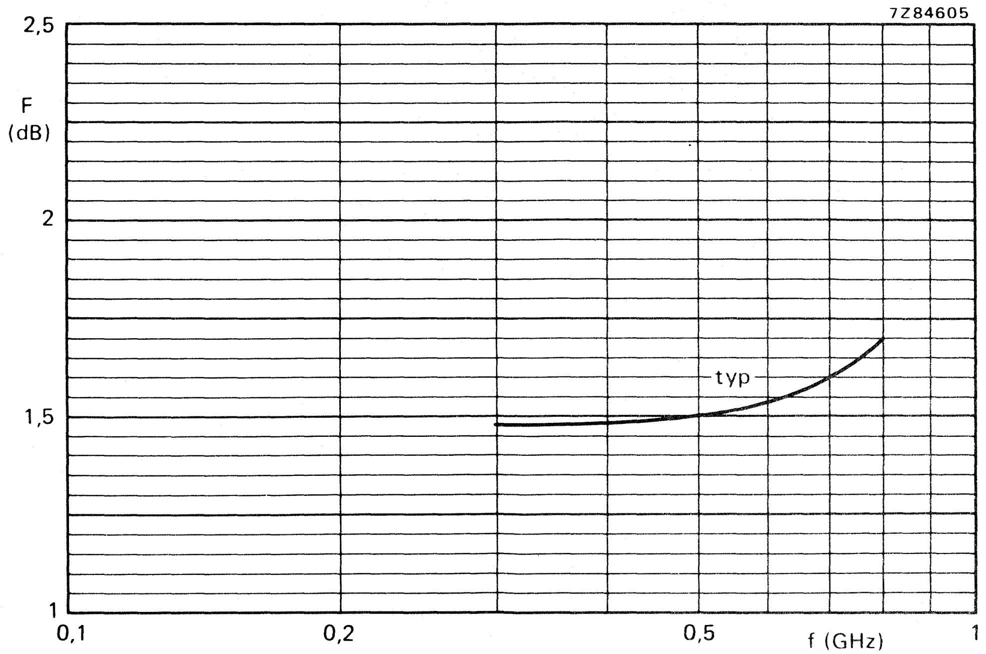

Fig. 12 V_{CE} = 10 V; I_C = 4 mA; Z_S = optimum; T_{amb} = 25 °C; typical values.

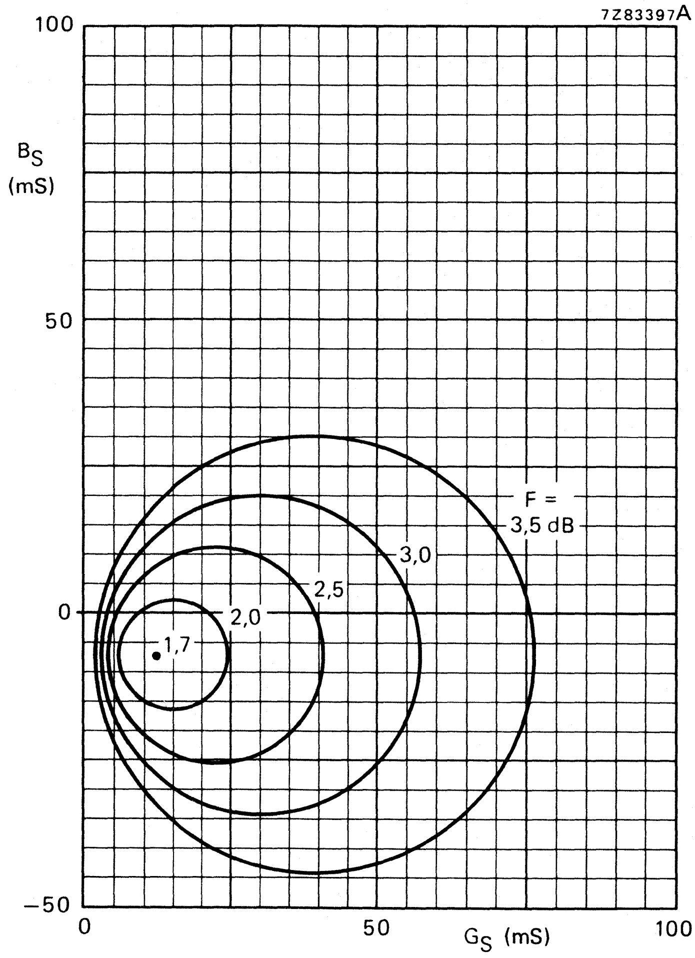

Fig. 13 Circles of constant noise figure.
V_{CE} = 10 V; I_C = 4 mA; f = 800 MHz; T_{amb} = 25 °C; typical values.

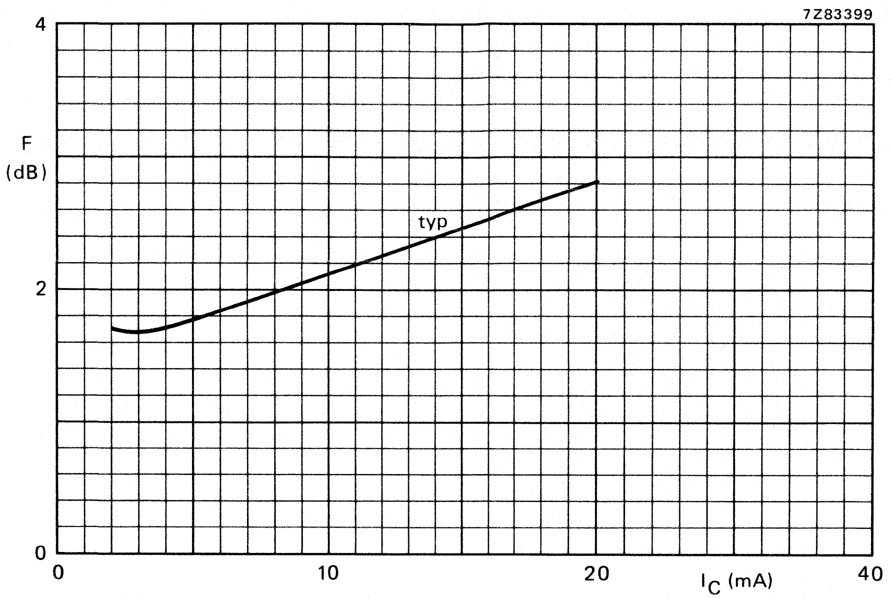

Fig. 14 V_{CE} = 10 V; f = 800 MHz; Z_S = optimum; T_{amb} = 25 °C; typical values.

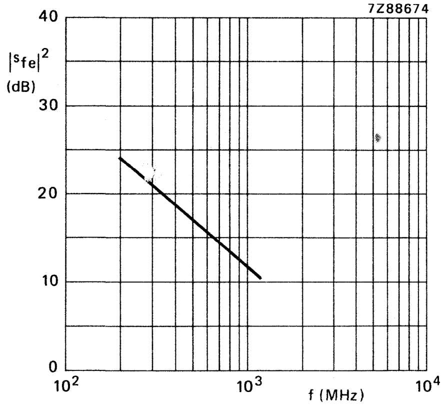

Fig. 15 V_{CE} = 10 V; I_C = 14 mA; T_{amb} = 25 °C; typical values.

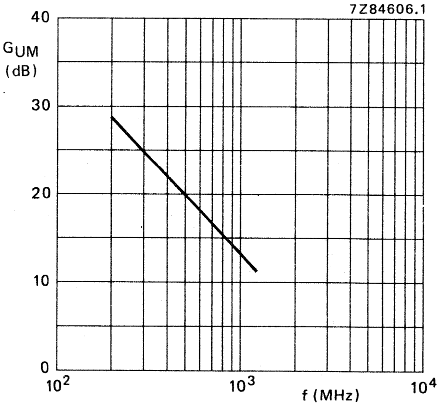

Fig. 16 V_{CE} = 10 V; I_C = 14 mA; T_{amb} = 25 °C; typical values.

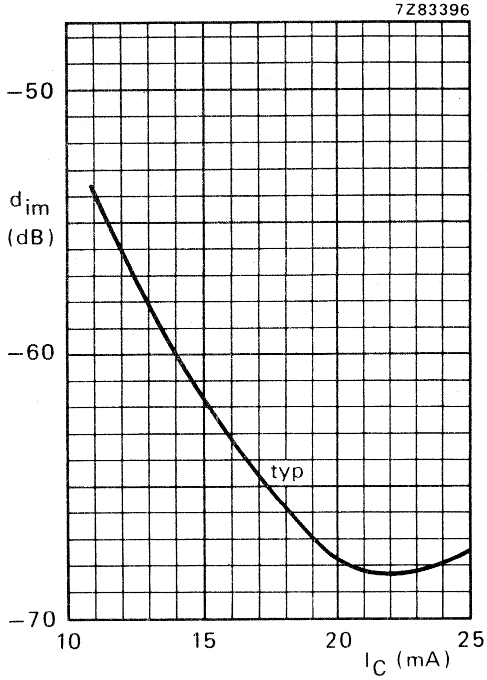

Fig. 17 V_{CE} = 10 V; V_o = 43,5 dBmV = 150 mV; $f_{(p+q-r)}$ = 793,25 MHz; T_{amb} = 25 °C; measured in MATV test circuit (see Fig. 2); typical values.

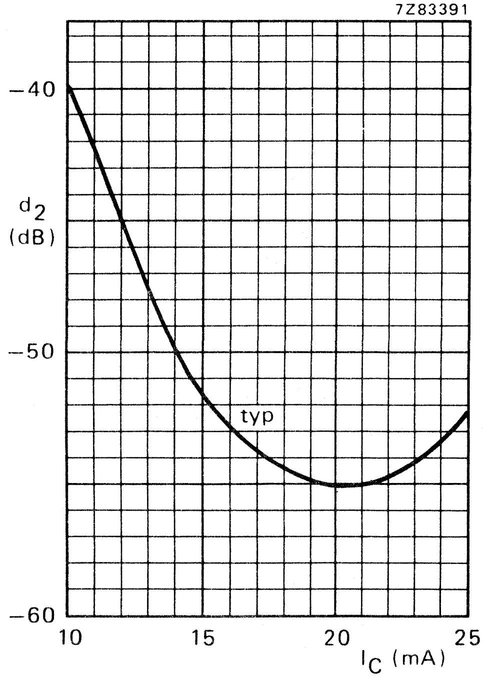

Fig. 18 V_{CE} = 10 V; V_o = 60 mV; $f_{(p+q)}$ = 810 MHz; T_{amb} = 25 °C; measured in MATV test circuit (see Fig. 2); typical values.

N-P-N 1 GHz WIDEBAND TRANSISTOR

N-P-N transistor in a SOT-23 plastic envelope. It is primarily intended for use in u.h.f. and microwave amplifiers in thick and thin-film circuits, such as in aerial amplifiers, radar systems, oscilloscopes, spectrum analysers etc. The transistor features very low intermodulation distortion and high power gain; thanks to its very high transition frequency, it also has excellent wideband properties and low noise up to high frequencies.

P-N-P complement is the BFT93.

QUICK REFERENCE DATA

Collector-base voltage (open emitter)	V_{CBO}	max.	15	V
Collector-emitter voltage (open base)	V_{CEO}	max.	12	V
Collector current (d.c.)	I_C	max.	35	mA
Total power dissipation up to T_{amb} = 60 °C	P_{tot}	max.	200	mW
Junction temperature	T_j	max.	150	°C
Transition frequency at f = 500 MHz I_C = 30 mA; V_{CE} = 5 V	f_T	typ.	5	GHz
Feedback capacitance at f = 1 MHz I_C = 2 mA; V_{CE} = 5 V	C_{re}	typ.	0,8	pF
Noise figure at optimum source impedance I_C = 2 mA; V_{CE} = 5 V; f = 500 MHz;	F	typ.	1,9	dB
Max. unilateral power gain I_C = 30 mA; V_{CE} = 5 V; f = 500 MHz;	G_{UM}	typ.	16,5	dB
Intermodulation distortion at T_{amb} = 25 °C I_C = 30 mA; V_{CE} = 5 V; R_L = 75 Ω; V_o = 300 mV $f_{(p+q-r)}$ = 493,25 MHz	d_{im}	typ.	−60	dB

MECHANICAL DATA

Dimensions in mm

Fig. 1 SOT-23.

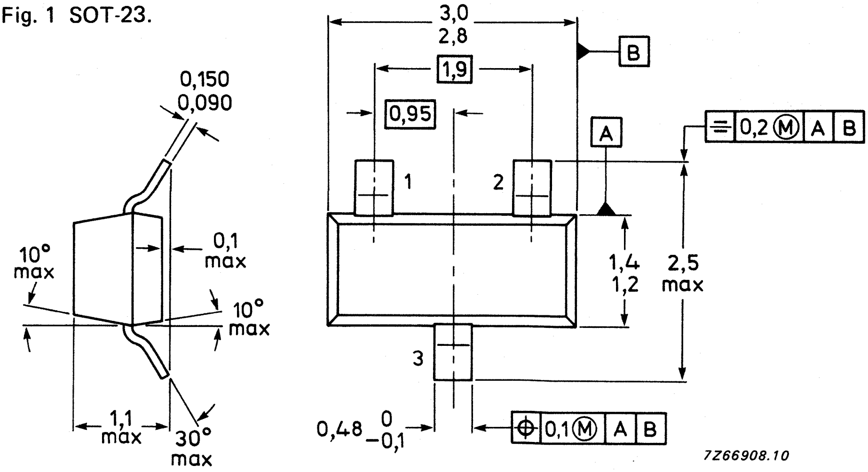

TOP VIEW

Marking code

BFR93 = R1

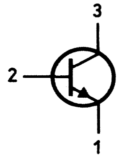

If required, the R-version (reverse pinning) is available on request.

RATINGS

Limiting values in accordance with the Absolute Maximum System (IEC 134)

Collector-base voltage (open emitter)	V_{CBO}	max.	15	V
Collector-emitter voltage (open base)	V_{CEO}	max.	12	V
Emitter-base voltage (open collector)	V_{EBO}	max.	2,0	V
Collector current (d.c.)	I_C	max.	35	mA
Total power dissipation up to $T_{amb} = 60\ ^oC$**	P_{tot}	max.	200	mW
Storage temperature	T_{stg}	−65 to	+ 150	^oC
Junction temperature	T_j	max.	150	^oC

THERMAL CHARACTERISTICS *

$T_j = P \times (R_{th\ j\text{-}t} + R_{th\ t\text{-}s} + R_{th\ s\text{-}a}) + T_{amb}$

Thermal resistance

From junction to tab	$R_{th\ j\text{-}t}$	=	60	K/W
From tab to soldering points	$R_{th\ t\text{-}s}$	=	280	K/W
From soldering points to ambient **	$R_{th\ s\text{-}a}$	=	90	K/W

CHARACTERISTICS

$T_j = 25\ ^oC$ unless otherwise specified

Collector cut-off current $I_E = 0;\ V_{CB} = 10$ V	I_{CBO}	max.	50	nA
D.C. current gain ▲ $I_C = 30$ mA; $V_{CE} = 5$ V	h_{FE}	min. typ.	25 50	
Transition frequency at f = 500 MHz ▲ $I_C = 30$ mA; $V_{CE} = 5$ V	f_T	typ.	5	GHz
Collector capacitance at f = 1 MHz $I_E = I_e = 0;\ V_{CB} = 10$ V	C_c	typ.	0,7	pF
Emitter capacitance at f = 1 MHz $I_C = I_c = 0;\ V_{EB} = 0,5$ V	C_e	typ.	1,8	pF
Feedback capacitance at f = 1 MHz $I_C = 2$ mA; $V_{CE} = 5$ V; $T_{amb} = 25\ ^oC$	C_{re}	typ.	0,8	pF

▲ Measured under pulse conditions.

* See *Thermal characteristics.*

** Mounted on a ceramic substrate of 8 mm x 10 mm x 0,7 mm.

Noise figure at optimum source impedance *			
$I_C = 2$ mA; $V_{CE} = 5$ V; f = 500 MHz; $T_{amb} = 25$ °C	F	typ.	1,9 dB
Max. unilateral power gain (s_{re} assumed to be zero)			

$$G_{UM} = 10 \log \frac{|s_{fe}|^2}{(1-|s_{ie}|^2)(1-|s_{oe}|^2)}$$

$I_C = 30$ mA; $V_{CE} = 5$ V; f = 500 MHz; $T_{amb} = 25$ °C	G_{UM}	typ.	16,5 dB
Intermodulation distortion at $T_{amb} = 25$ °C *			
$I_C = 30$ mA; $V_{CE} = 5$ V; $R_L = 75\ \Omega$; V.S.W.R. < 2			
$V_p = V_o = 300$ mV at $f_p = 495{,}25$ MHz			
$V_q = V_o - 6$ dB at $f_q = 503{,}25$ MHz			
$V_r = V_o - 6$ dB at $f_r = 505{,}25$ MHz			
Measured at $f_{(p+q-r)} = 493{,}25$ MHz	d_{im}	typ.	−60 dB

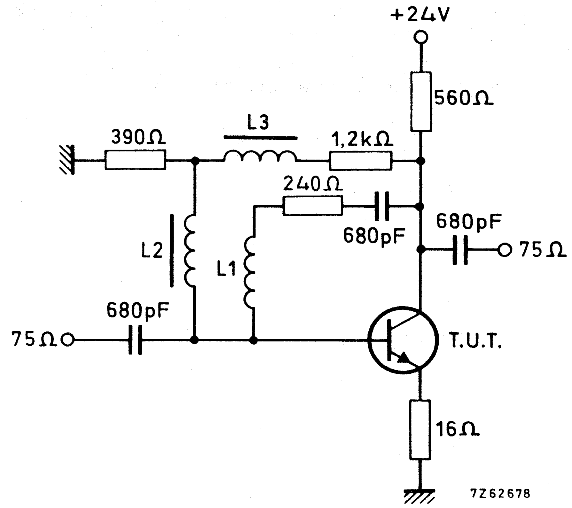

Fig. 2 Intermodulation test circuit.

L1 = 4 turns Cu wire (0,35); winding pitch 1 mm; int. dia. 4 mm

L2 and L3 5 μH (code number: 3122 108 20150)

---

* Crystal mounted in a BFR91 envelope.

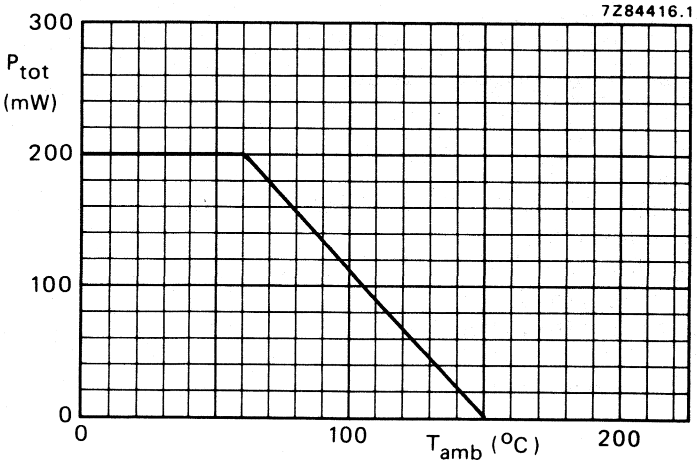

Fig. 3 Power derating curve.

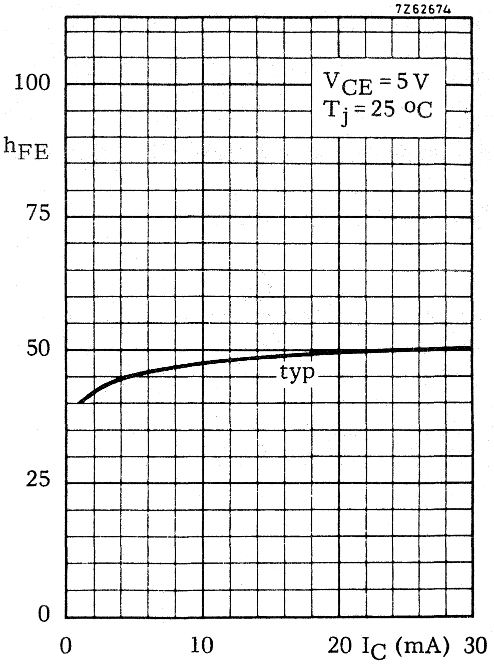

Fig. 4.

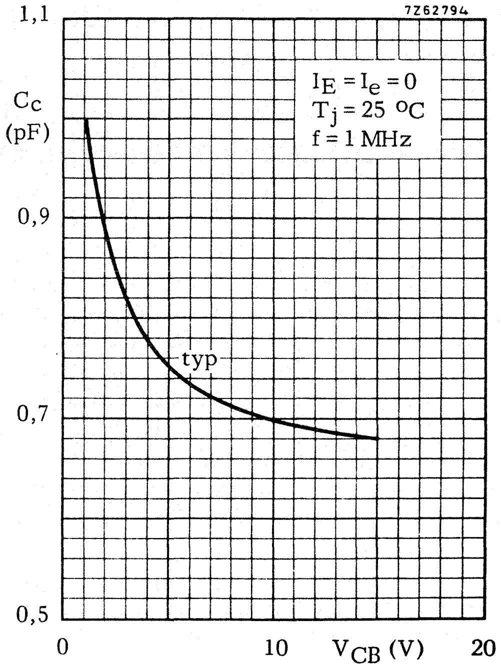

Fig. 5.

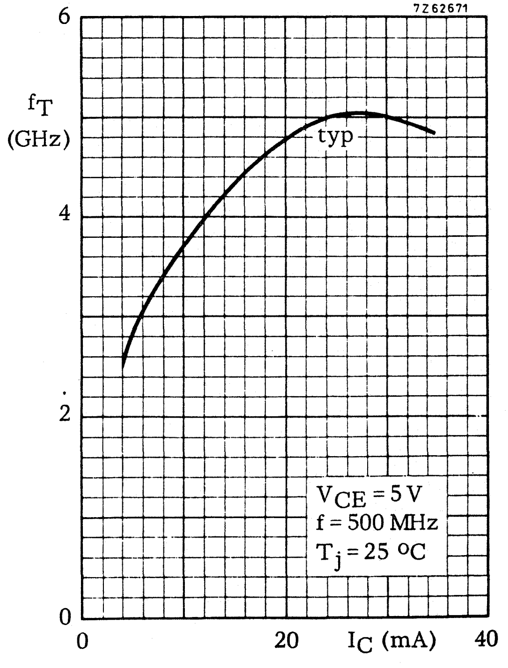

Fig. 6.

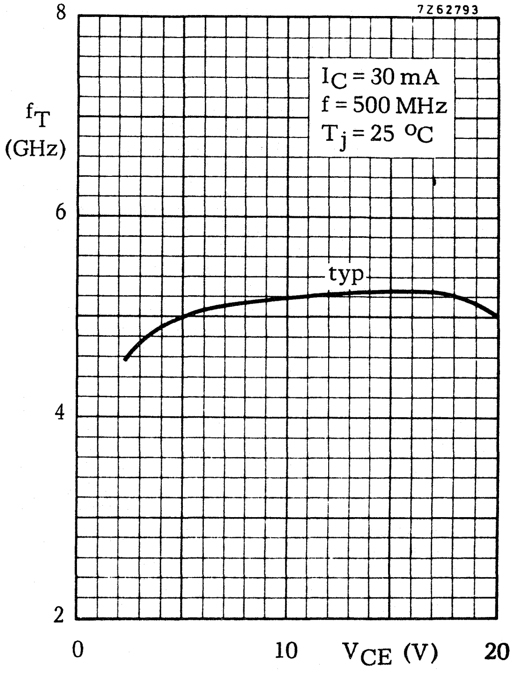

Fig. 7.

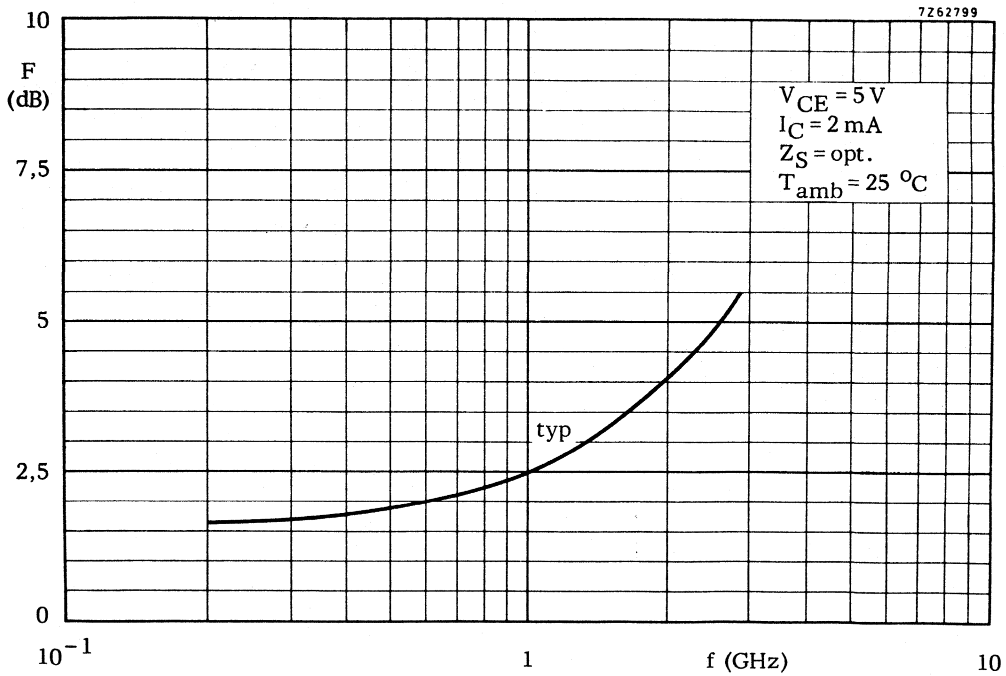
7Z62799
F
(dB)
10
7,5
5
2,5
0
$V_{CE} = 5$ V
$I_C = 2$ mA
Z_S = opt.
$T_{amb} = 25$ °C
typ
10^{-1}
1
f (GHz)
10

Fig. 8.

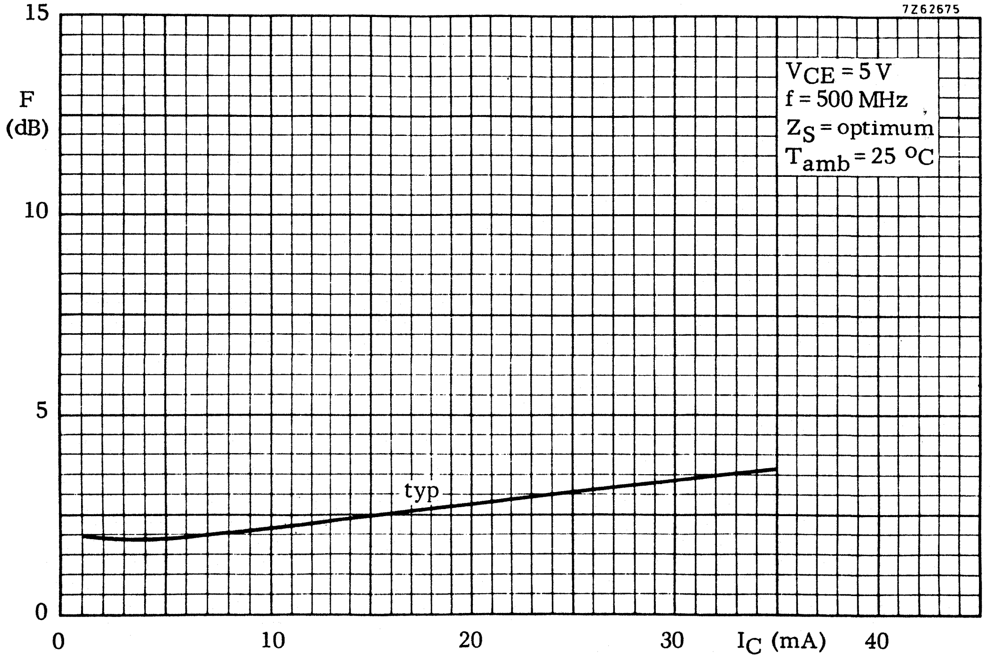
7Z62675
F
(dB)
15
10
5
0
$V_{CE} = 5$ V
f = 500 MHz
Z_S = optimum
$T_{amb} = 25$ °C
typ
0
10
20
30
I_C (mA)
40

Fig. 9.

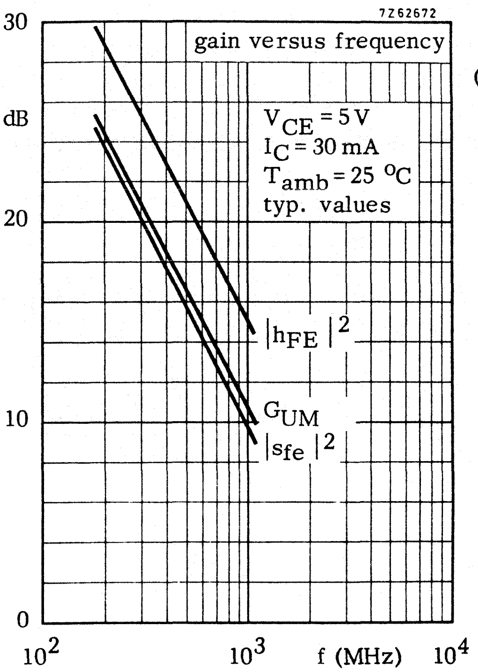
7Z62672
gain versus frequency
30
dB
20
10
0
V_{CE} = 5 V
I_C = 30 mA
T_{amb} = 25 °C
typ. values
$|h_{FE}|^2$
G_{UM}
$|s_{fe}|^2$
10^2
10^3
f (MHz)
10^4

Fig. 10.

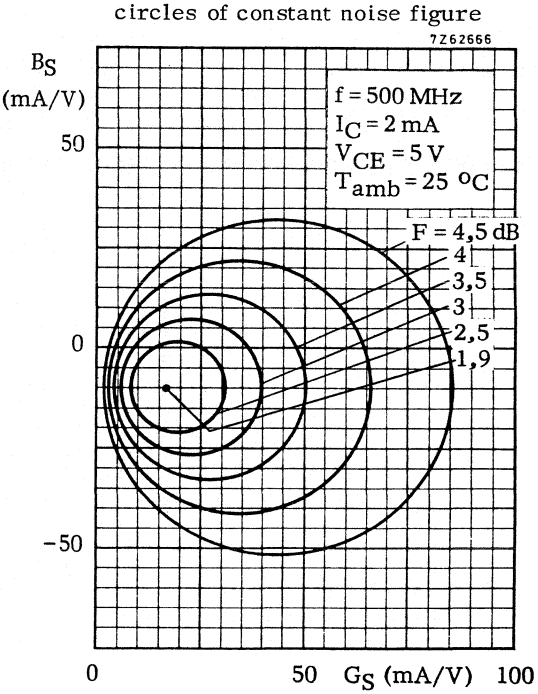
circles of constant noise figure
7Z62666
B_S (mA/V)
50
0
−50
f = 500 MHz
I_C = 2 mA
V_{CE} = 5 V
T_{amb} = 25 °C
F = 4,5 dB
4
3,5
3
2,5
1,9
0
50
G_S (mA/V)
100

Fig. 11.

V_{CE} = 5 V

I_C = 30 mA

T_{amb} = 25 °C

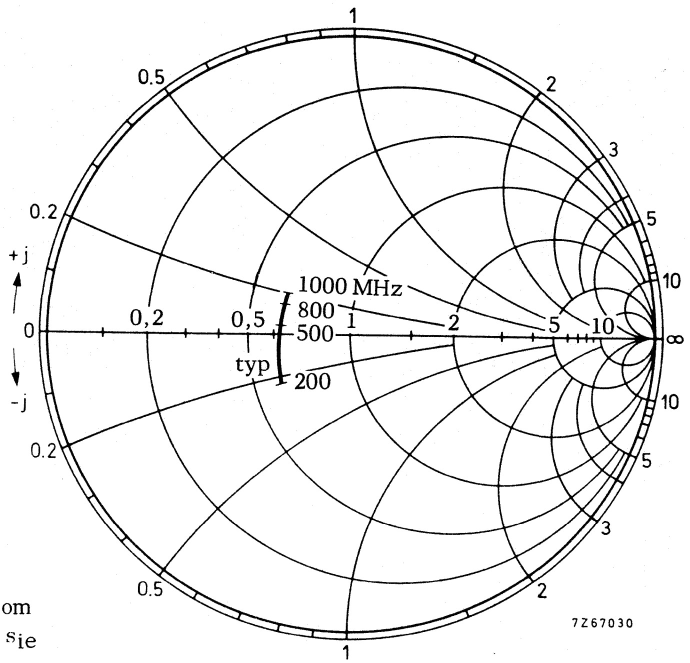

Fig. 12.

Input impedance derived from input reflection coefficient s_{ie} coordinates in ohm x 50

V_{CE} = 5 V

I_C = 30 mA

T_{amb} = 25 °C

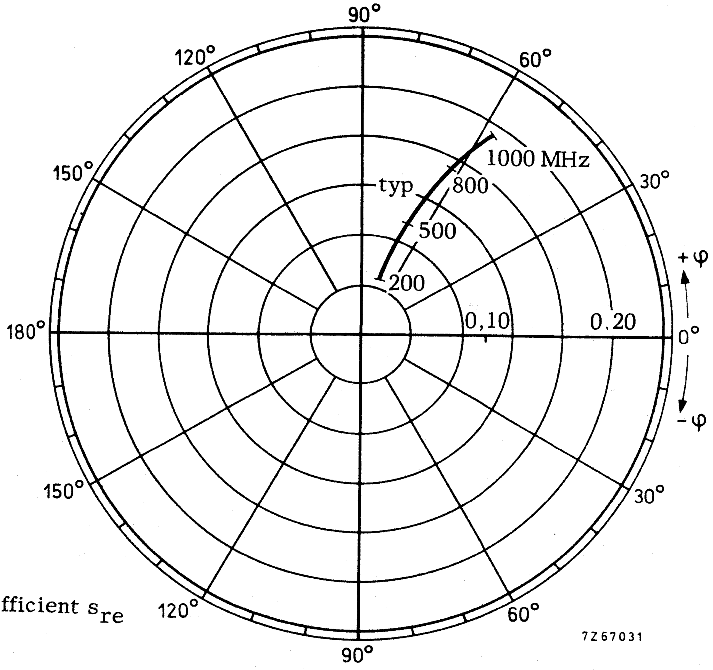

Fig. 13.

Reverse transmission coefficient s_{re}

$V_{CE} = 5$ V
$I_C = 30$ mA
$T_{amb} = 25$ °C

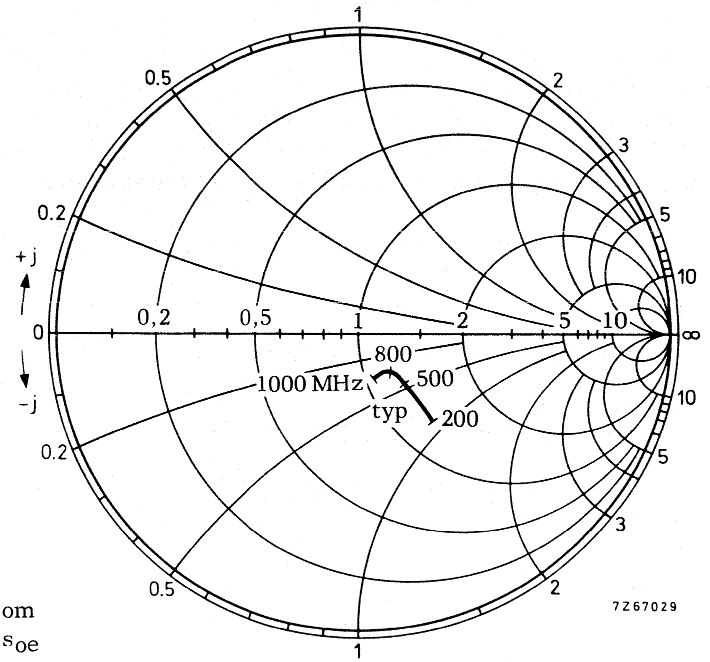

Fig. 14.

Output impedance derived from output reflection coefficient s_{oe} coordinates in ohm x 50

$V_{CE} = 5$ V
$I_C = 30$ mA
$T_{amb} = 25$ °C

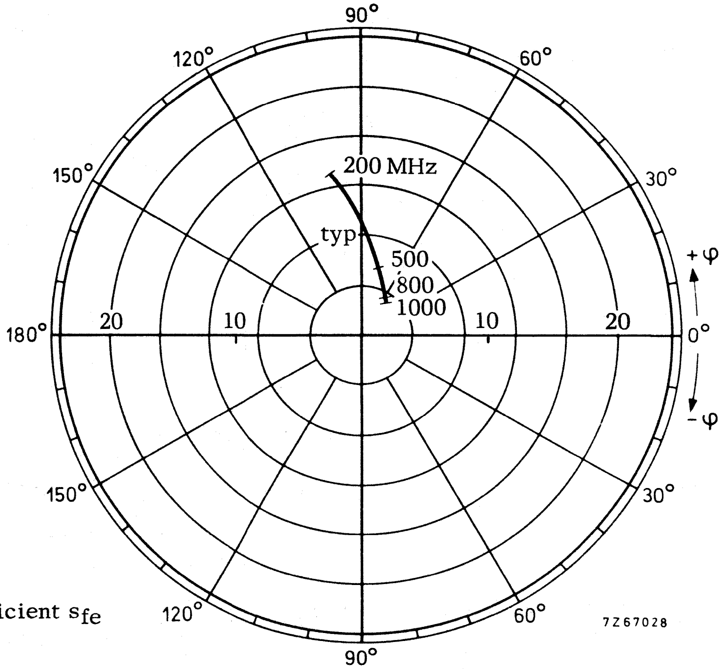

Fig. 15.

Forward transmission coefficient s_{fe}

N-P-N 1 GHz WIDEBAND TRANSISTOR

N-P-N transistors in a SOT-23 plastic envelope. They are primarily intended for use in v.h.f./u.h.f. broadband amplifiers. The transistors feature:

- low noise;
- very low intermodulation distortion;
- high power gain;
- P-N-P complement to the BFR93

QUICK REFERENCE DATA

Collector-base voltage (open emitter)	V_{CBO}	max.	15	V
Collector-emitter voltage (open base)	V_{CEO}	max.	12	V
Collector current (d.c.)	I_C	max.	35	mA
Total power dissipation up to T_{amb} = 45 °C	P_{tot}	max.	250	mW
Junction temperature	T_j	max.	150	°C
Transition frequency at f = 500 MHz I_C = 30 mA; V_{CE} = 5 V	f_T	typ.	5	GHz
Feedback capacitance at f = 1 MHz I_C = 0; V_{CE} = 5 V; T_{amb} = 25 °C	C_{re}	typ.	0,6	pF
Noise figure at optimum source impedance I_C = 4 mA; V_{CE} = 8 V; f = 800 MHz	F	typ.	1,6	dB
Output voltage at d_{im} = −60 dB I_C = 30 mA; V_{CE} = 8 V; R_L = 75 Ω; T_{amb} = 25 °C $f_{(p+q-r)}$ = 793,25 MHz	V_o	typ.	425	mV

MECHANICAL DATA

Dimensions in mm

Marking code

BFR93A = R2

Fig. 1 SOT-23.

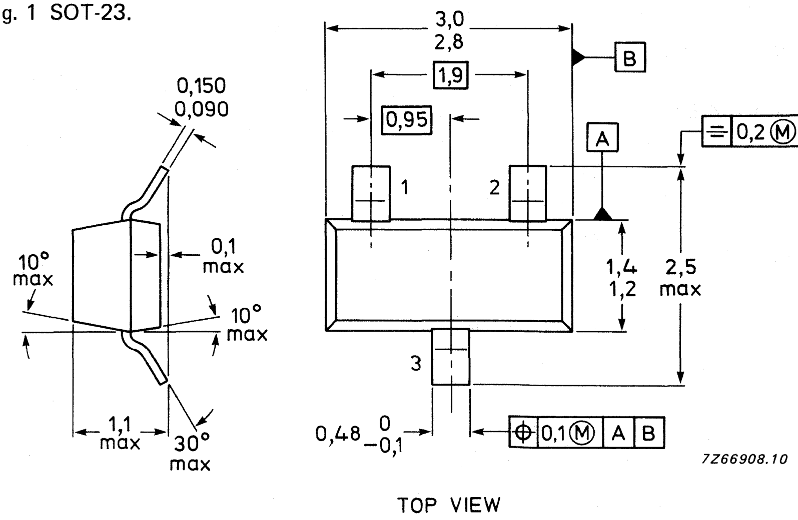

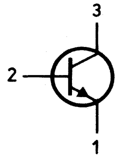

If required, the R-version (reverse pinning) is available on request
See also *Soldering recommendations.*

RATINGS

Limiting values in accordance with the Absolute Maximum System (IEC 134)

Collector-base voltage (open emitter)	V_{CBO}	max.	15	V
Collector-emitter voltage (open base)	V_{CEO}	max.	12	V
Emitter-base voltage (open collector)	V_{EBO}	max.	2,0	V
Collector current (d.c.)	I_C	max.	35	mA
Total power dissipation up to T_{amb} = 45 °C**	P_{tot}	max.	250	mW
Storage temperature	T_{stg}	−65 to + 150		°C
Junction temperature	T_j	max.	150	°C

THERMAL CHARACTERISTICS*

$T_j = P \times (R_{th\,j\text{-}t} + R_{th\,t\text{-}s} + R_{th\,s\text{-}a}) + T_{amb}$

Thermal resistance

From junction to tab	$R_{th\,j\text{-}t}$	=	60	K/W
From tab to soldering points	$R_{th\,t\text{-}s}$	=	280	K/W
From soldering points to ambient**	$R_{th\,s\text{-}a}$	=	90	K/W

CHARACTERISTICS

T_j = 25 °C unless otherwise specified

Collector cut-off current $I_E = 0$; $V_{CB} = 5$ V	I_{CBO}	max.	50	nA
D.C. current gain▲ $I_C = 30$ mA; $V_{CE} = 5$ V	h_{FE}	min. typ.	40 90	
Transition frequency at f = 500 MHz▲ $I_C = 30$ mA; $V_{CE} = 5$ V	f_T	typ.	5	GHz
Collector capacitance at f = 1 MHz $I_E = I_e = 0$; $V_{CB} = 5$ V	C_c	typ.	0,7	pF
Emitter capacitance at f = 1 MHz $I_C = I_c = 0$; $V_{EB} = 0{,}5$ V	C_e	typ.	1,9	pF
Feedback capacitance at f = 1 MHz $I_C = 0$; $V_{CE} = 5$ V; $T_{amb} = 25$ °C	C_{re}	typ.	0,6	pF
Noise figure at optimum source impedance▲				
$I_C = 4$ mA; $V_{CE} = 8$ V; f = 800 MHz	F	typ.	1,6	dB
$I_C = 30$ mA; $V_{CE} = 8$ V; f = 800 MHz	F	typ.	2,3	dB

Maximum unilateral power gain (s_{re} assumed to be zero)
See Figs 10 to 15

$$G_{UM}\ (\text{in dB}) = 10 \log \frac{|s_{fe}|^2}{(1 - |s_{ie}|^2)\,(1 - |s_{oe}|^2)}$$

$I_C = 30$ mA; $V_{CE} = 8$ V; f = 800 MHz; $T_{amb} = 25$ °C	G_{UM}	typ.	14	dB

▲ Measured under pulse conditions.
* See *Thermal characteristics.*
** Mounted on a ceramic substrate of 8 mm x 10 mm x 0,7 mm.

Output voltage at d_{im} = −60 dB (see Figs 2 and 16)*
(DIN 45004B, par. 6.3: 3-tone)
I_C = 30 mA; V_{CE} = 8 V; R_L = 75 Ω; T_{amb} = 25 °C
V_p = V_o at d_{im} = −60 dB; f_p = 795,25 MHz
V_q = V_o −6 dB ; f_q = 803,25 MHz
V_r = V_o −6 dB ; f_r = 805,25 MHz
Measured at $f_{(p+q-r)}$ = 793,25 MHz V_o typ. 425 mV

Second harmonic distortion (see Figs 2 and 17)*
I_C = 30 mA; V_{CE} = 8 V; R_L = 75 Ω; T_{amb} = 25 °C
V_p = 200 mV at f_p = 250 MHz
V_q = 200 mV at f_q = 560 MHz
measured at $f_{(p+q)}$ = 810 MHz d_2 typ. −50 dB

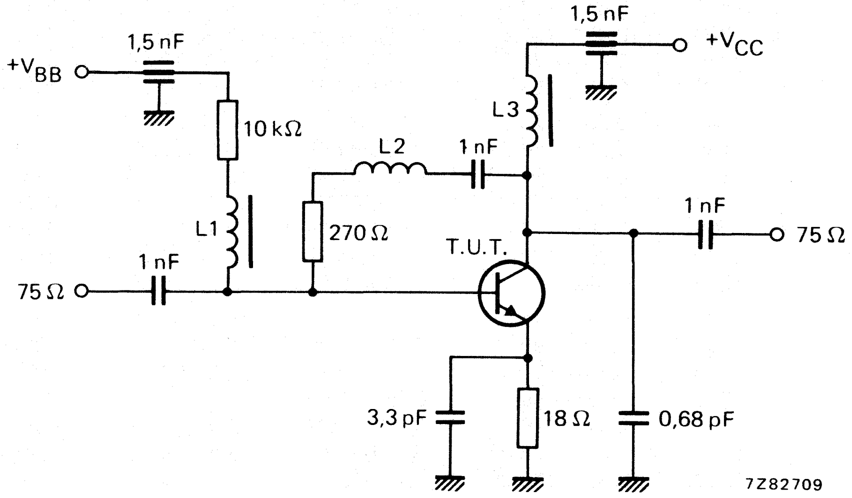

Fig. 2 Intermodulation distortion and second harmonic distortion MATV test circuit.

L1 = L3 = 5 μH micro choke
L2 = 3 turns Cu wire (0,4 mm); internal diameter 3 mm; winding pitch 1 mm.

---

* Measured on same crystal in a SOT-37 envelope (BFR91A).

s-parameters (common emitter)

V_{CE} V	I_C mA	f MHz	s_{ie}	s_{re}	s_{fe}	s_{oe}
5	2	40	0,89/ −12,4°	0,016/82,3°	7,0/171,8°	0,88/ −4,8°
		100	0,87/ −30,1°	0,038/74,2°	6,7/160,1°	0,96/−11,3°
		200	0,80/ −56,3°	0,067/61,8°	6,0/142,3°	0,88/−20,1°
		500	0,64/−109,5°	0,106/44,3°	3,8/110,6°	0,69/−31,9°
		800	0,57/−140,3°	0,116/41,8°	2,7/ 91,5°	0,60/−35,5°
		1000	0,54/−154,5°	0,119/43,9°	2,2/ 82,8°	0,58/−38,0°
		1200	0,53/−166,6°	0,124/48,2°	1,9/ 75,1°	0,56/−40,2°
5	5	40	0,77/ −19,9°	0,015/79,4°	15,1/166,8°	0,97/ −8,8°
		100	0,72/ −46,9°	0,033/68,6°	13,5/149,7°	0,89/−19,6°
		200	0,62/ −81,4°	0,053/57,0°	10,5/128,5°	0,73/−30,3°
		500	0,48/−134,4°	0,079/52,6°	5,5/100,5°	0,51/−37,3°
		800	0,45/−159,8°	0,099/57,8°	3,6/ 85,6°	0,44/−37,9°
		1000	0,44/−170,8°	0,114/61,0°	3,0/ 78,8°	0,42/−39,3°
		1200	0,43/ 179,8°	0,131/64,2°	2,5/ 72,9°	0,41/−40,9°
5	10	40	0,63/ −29,7°	0,013/76,5°	24,4/161,0°	0,95/−13,5°
		100	0,56/ −66,2°	0,028/64,8°	20,0/139,4°	0,80/−17,8°
		200	0,47/−105,4°	0,042/57,8°	13,6/118,0°	0,59/−37,3°
		500	0,41/−152,0°	0,070/62,6°	6,4/ 94,8°	0,39/−39,0°
		800	0,39/−171,7°	0,099/67,6°	4,1/ 82,7°	0,35/−38,2°
		1000	0,39/ 179,6°	0,119/69,1°	3,4/ 76,7°	0,34/−39,1°
		1200	0,39/ 171,6°	0,140/70,5°	2,8/ 71,5°	0,33/−40,7°
5	20	40	0,47/ −44,2°	0,012/73,8°	35,2/154,0°	0,90/−19,2°
		100	0,42/ −90,7°	0,023/63,9°	25,4/129,3°	0,68/−35,0°
		200	0,39/−129,4°	0,034/62,9°	15,6/109,7°	0,47/−41,0°
		500	0,37/−165,1°	0,067/70,5°	6,8/ 90,9°	0,32/−38,4°
		800	0,37/ 179,5°	0,101/73,2°	4,4/ 80,3°	0,29/−37,4°
		1000	0,36/ 173,0°	0,124/73,4°	3,6/ 75,4°	0,29/−38,3°
		1200	0,37/ 166,2°	0,148/73,6°	3,0/ 70,3°	0,28/−40,0°
5	30	40	0,39/ −56,3°	0,011/72,3°	40,8/149,5°	0,86/−22,5°
		100	0,38/−106,8°	0,021/64,5°	27,4/124,0°	0,61/−37,9°
		200	0,37/−141,6°	0,032/66,4°	16,0/105,8°	0,41/−41,1°
		500	0,37/−171,0°	0,067/73,5°	6,9/ 88,9°	0,29/−36,6°
		800	0,37/ 175,9°	0,102/75,2°	4,4/ 79,1°	0,27/−36,0°
		1000	0,36/ 170,0°	0,126/74,8°	3,6/ 74,2°	0,27/−37,1°
		1200	0,37/ 163,9°	0,150/74,6°	3,0/ 69,5°	0,27/−39,0°

s-parameters (common emitter)

V_{CE} V	I_C mA	f MHz	s_{ie}	s_{re}	s_{fe}	s_{oe}
8	2	40	0,90/ −12,2°	0,015/82,1°	6,9/171,7°	0,99/ −4,8°
		100	0,88/ −29,2°	0,036/74,5°	6,6/160,4°	0,96/−10,8°
		200	0,81/ −54,7°	0,064/62,4°	5,9/143,1°	0,89/−19,2°
		500	0,64/−107,0°	0,103/44,9°	3,8/111,5°	0,71/−30,6°
		800	0,56/−138,1°	0,112/42,1°	2,7/ 92,2°	0,62/−34,1°
		1000	0,54/−152,6°	0,116/44,1°	2,3/ 83,6°	0,60/−36,4°
		1200	0,52/−165,2°	0,120/48,5°	1,9/ 75,9°	0,58/−38,6°
8	5	40	0,78/ −19,2°	0,014/79,4°	14,8/166,9°	0,98/ −8,6°
		100	0,73/ −44,6°	0,032/69,0°	13,5/150,4°	0,90/−18,7°
		200	0,63/ −78,1°	0,051/57,5°	10,5/129,4°	0,75/−28,9°
		500	0,48/−131,2°	0,077/52,5°	5,6/101,3°	0,53/−35,7°
		800	0,44/−157,3°	0,096/57,7°	3,7/ 86,3°	0,46/−36,2°
		1000	0,42/−168,3°	0,110/61,0°	3,0/ 79,5°	0,44/−37,5°
		1200	0,42/−178,3°	0,126/64,3°	2,6/ 73,6°	0,43/−39,0°
6	10	40	0,66/ −27,7°	0,013/76,7°	24,0/161,5°	0,95/−12,9°
		100	0,58/ −62,0°	0,027/65,4°	19,9/140,4°	0,81/−26,3°
		200	0,48/−100,1°	0,041/58,0°	13,8/119,0°	0,61/−35,5°
		500	0,40/−148,2°	0,068/62,2°	6,5/ 95,4°	0,42/−37,0°
		800	0,38/−169,1°	0,096/67,4°	4,2/ 83,0°	0,37/−36,2°
		1000	0,37/−178,3°	0,116/69,0°	3,4/ 77,4°	0,36/−37,0°
		1200	0,37/ 173,6°	0,136/70,5°	2,9/ 72,5°	0,35/−38,5°
8	20	40	0,53/ −39,6°	0,012/73,8°	34,7/154,8°	0,91/−18,1°
		100	0,45/ −83,0°	0,023/63,9°	25,6/130,5°	0,70/−33,2°
		200	0,39/−122,0°	0,034/62,2°	15,9/110,6°	0,49/−39,0°
		500	0,35/−161,3°	0,066/69,7°	7,0/ 91,4°	0,34/−36,2°
		800	0,35/−177,9°	0,098/72,7°	4,5/ 80,7°	0,31/−35,1°
		1000	0,34/ 175,2°	0,121/73,1°	3,7/ 75,8°	0,31/−36,0°
		1200	0,34/ 168,3°	0,143/73,4°	3,1/ 71,2°	0,30/−37,5°
8	30	40	0,47/ −48,0°	0,011/72,2°	40,3/150,8°	0,87/−20,9°
		100	0,41/ −95,5°	0,021/63,8°	27,5/125,4°	0,63/−35,7°
		200	0,36/−132,8°	0,032/64,9°	16,4/106,8°	0,44/−38,9°
		500	0,35/−166,6°	0,065/72,3°	7,1/ 89,6°	0,32/−34,4°
		800	0,34/ 178,8°	0,100/74,4°	4,5/ 79,7°	0,30/−33,6°
		1000	0,34/ 172,7°	0,122/74,4°	3,7/ 74,7°	0,30/−34,7°
		1200	0,34/ 166,0°	0,145/74,3°	3,1/ 70,3°	0,29/−36,5°

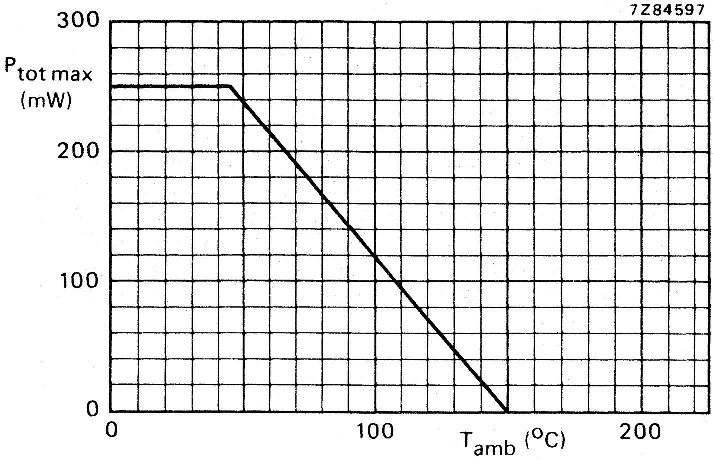

Fig. 3 Power derating curve.

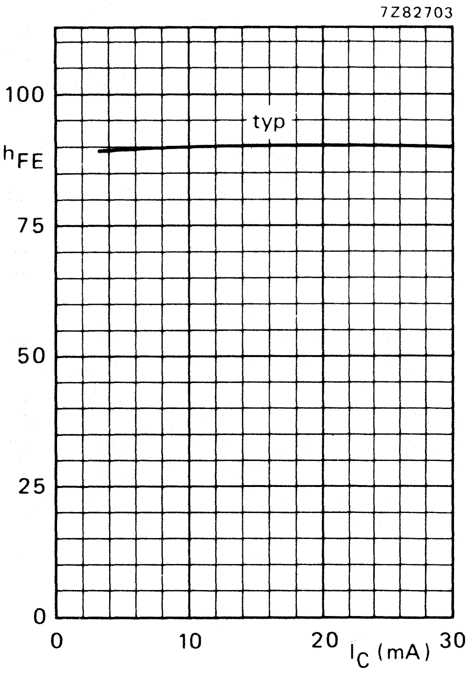

Fig. 4 V_{CE} = 5 V; T_j = 25 °C.

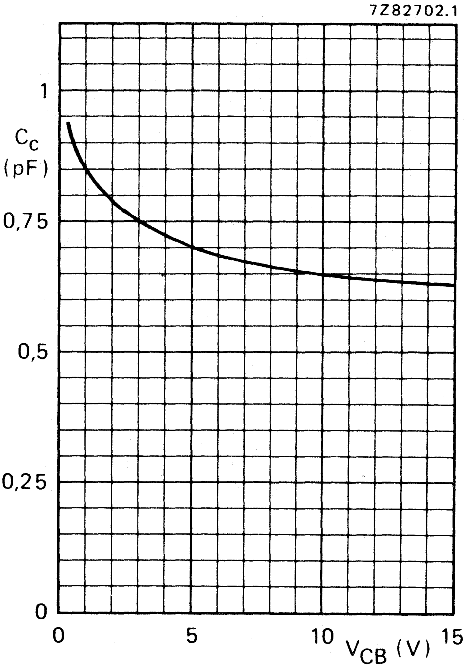

Fig. 5 Typical values collector capacitance
$I_E = I_e = 0$; f = 1 MHz; T_j = 25 °C.

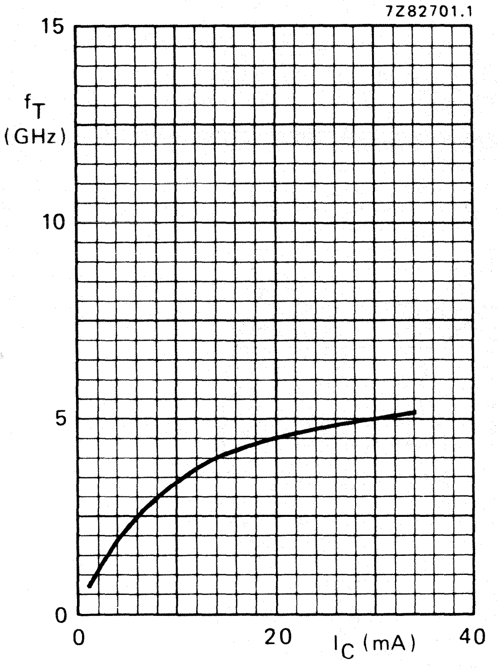

Fig. 6 Typical values transition frequency at V_{CE} = 5 V; f = 500 MHz; T_j = 25 °C.

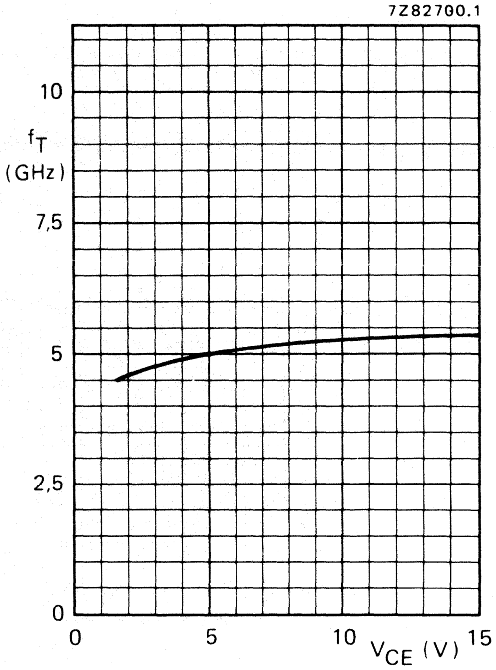

Fig. 7 Typical values transition frequency at I_C = 30 mA; f = 500 MHz; T_j = 25 °C.

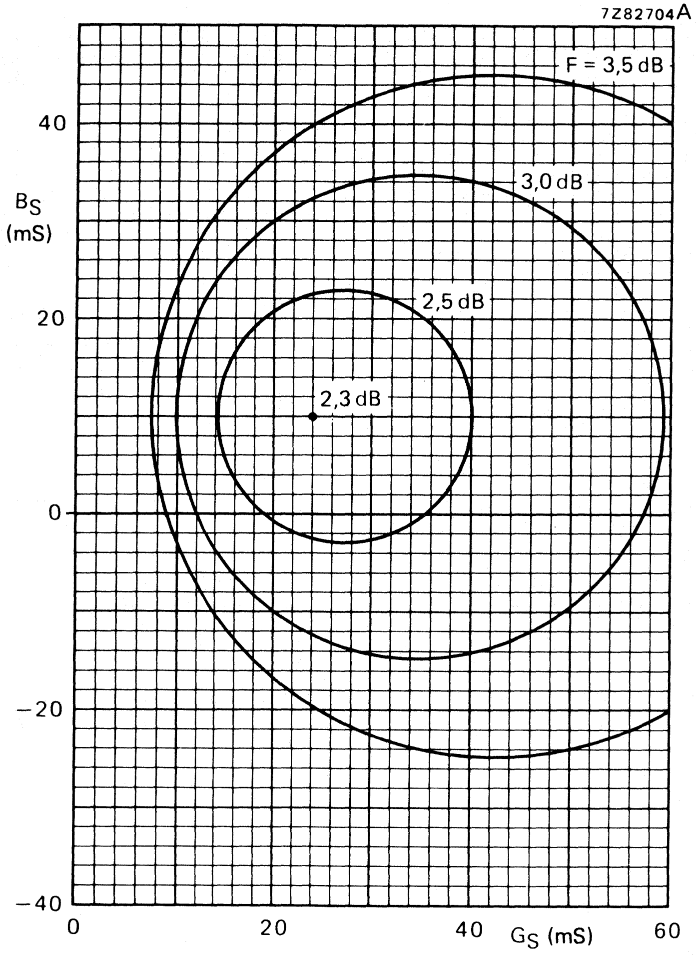

Fig. 8 Circles of constant noise figure.
V_{CE} = 8 V; I_C = 30 mA; f = 800 MHz;
T_{amb} = 25 °C; typical values.

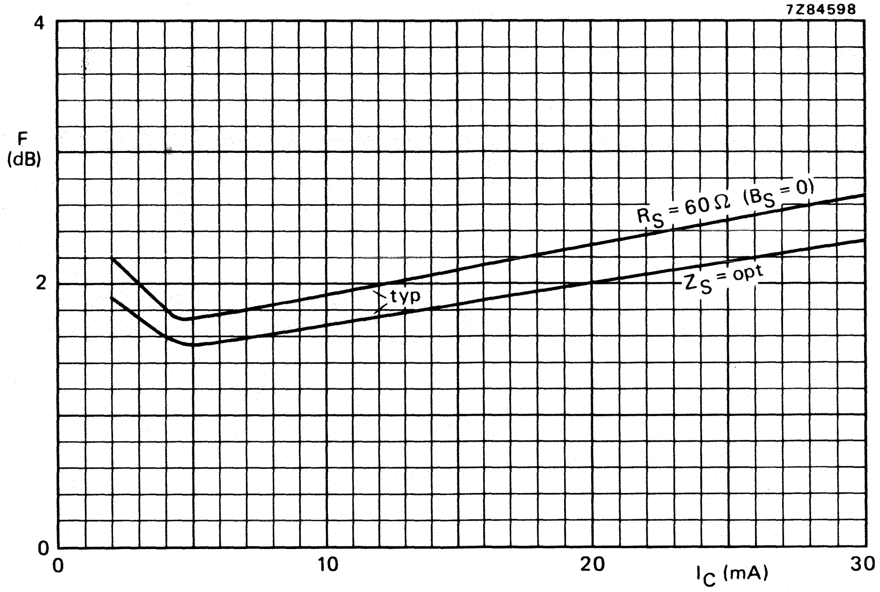

Fig. 9 $V_{CE} = 8$ V; f = 800 MHz; $T_{amb} = 25$ °C.

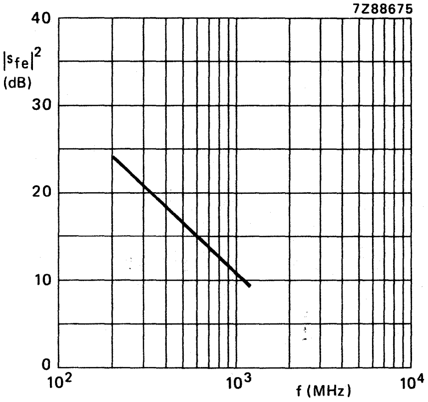

Fig. 10 Typical values forward transmission coefficient as a function of frequency. $V_{CE} = 8$ V; $I_C = 30$ mA; $T_{amb} = 25$ °C.

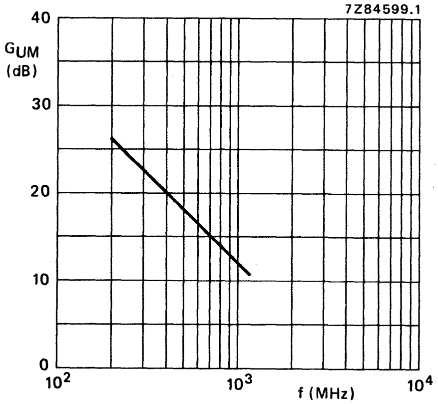

Fig. 11 Typical values unilateral power power gain as a function of frequency. $V_{CE} = 8$ V; $I_C = 30$ mA; $T_{amb} = 25$ °C.

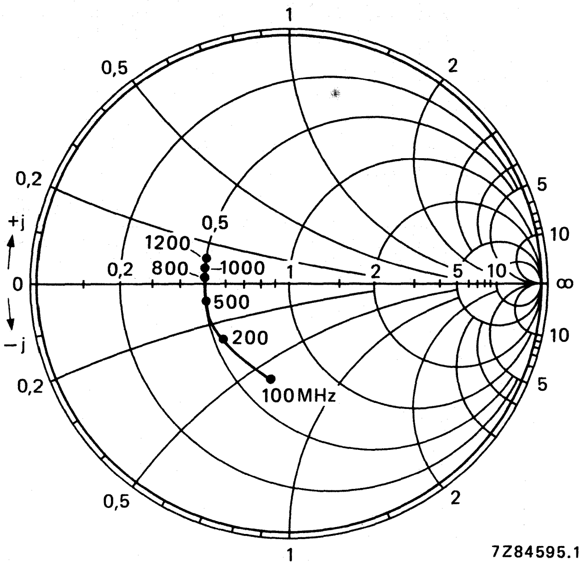

Fig. 12 Input impedance derived from input reflection coefficient s_{ie} co-ordinates in ohm x 50.
V_{CE} = 8 V; I_C = 30 mA; T_{amb} = 25 °C.

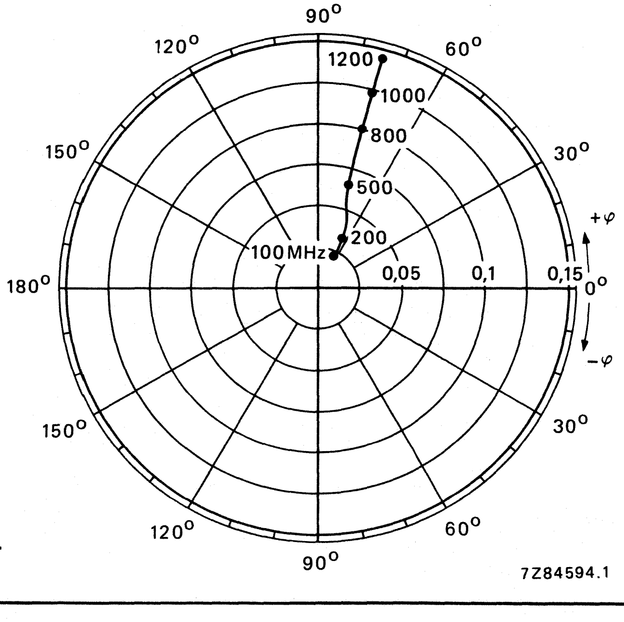

Fig. 13 Reverse transmission coefficient s_{re}.
V_{CE} = 8 V; I_C = 30 mA; T_{amb} = 25 °C.

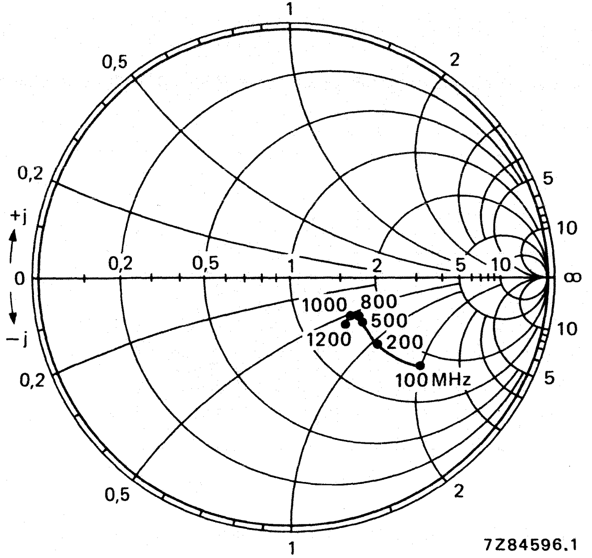

Fig. 14 Output impedance derived from output reflection coefficient s_{oe} co-ordinates in ohm x 50.
$V_{CE} = 8$ V; $I_C = 30$ mA; $T_{amb} = 25$ °C.

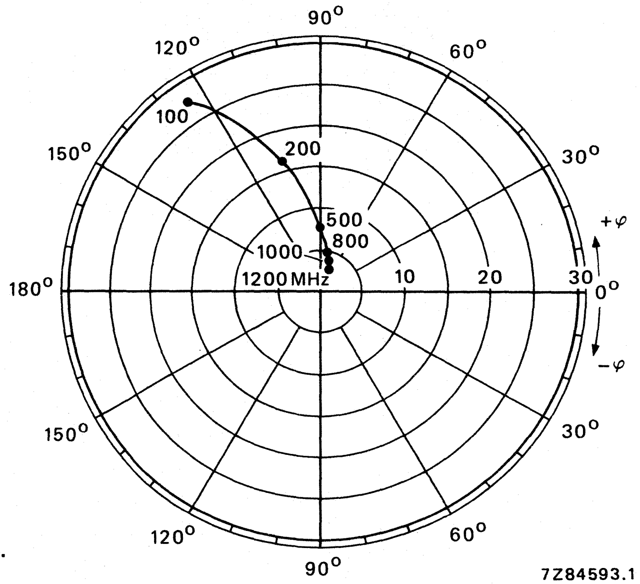

Fig. 15 Forward transmission coefficient s_{fe}.
$V_{CE} = 8$ V; $I_C = 30$ mA; $T_{amb} = 25$ °C.

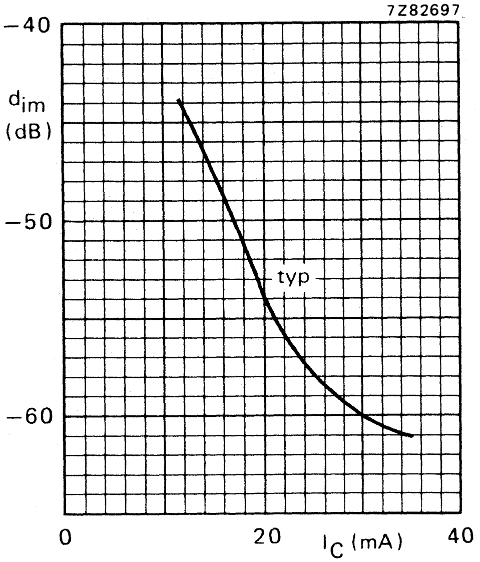

Fig. 16 $V_{CE} = 8$ V; $V_o = 425$ mV = 52,6 dBmV; $f_{(p+q-r)} = 793{,}25$ MHz; $T_{amb} = 25$ °C; measured in MATV test circuit (see Fig. 2).

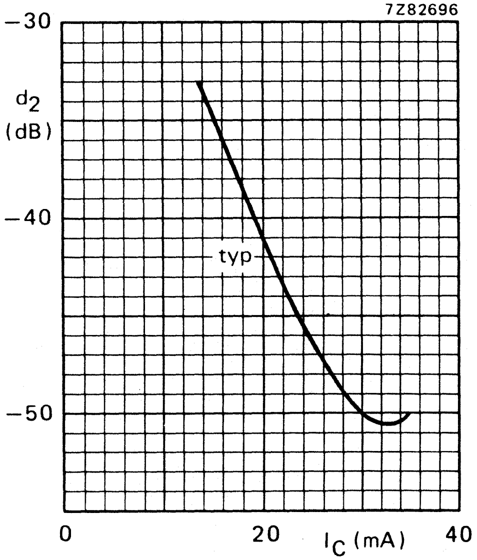

Fig. 17 $V_{CE} = 8$ V; $V_o = 200$ mV = 46 dBmV; $f_{(p+q)} = 810$ MHz; $T_{amb} = 25$ °C; measured in MATV test circuit (see Fig. 2).

N-P-N H.F. WIDEBAND TRANSISTOR

N-P-N resistance-stabilized transistor in a SOT-48 capstan envelope featuring extremely low cross modulation, intermodulation and second harmonic distortion. Thanks to its high transition frequency it has a high power gain in conjunction with good wideband properties and low noise up to high frequencies.

It is primarily intended for CATV and MATV applications.

QUICK REFERENCE DATA

Collector-base voltage (open emitter)	V_{CBO}	max.	30	V
Collector-emitter voltage (open base)	V_{CEO}	max.	25	V
Collector current (d.c.)	I_C	max.	150	mA
Total power dissipation up to $T_h = 145\ ^oC$; $f > 1$ MHz	P_{tot}	max.	3,5	W
Junction temperature	T_j	max.	200	^oC
Transition frequency at f = 500 MHz $I_C = 90$ mA; $V_{CE} = 20$ V	f_T	typ.	3,5	GHz
Cross modulation distortion (channel 13) $I_C = 90$ mA; $V_{CE} = 20$ V; $V_o = 48$ dBmV	d_{cm}	typ. max.	−61 −57	dB dB
$I_C = 90$ mA; $V_{CE} = 20$ V; $V_o = 32$ dBmV	d_{cm}	typ. max.	−93 −89	dB dB
Intermodulation distortion at $f_{(p+q-r)} = 194{,}25$ MHz $I_C = 90$ mA; $V_{CE} = 20$ V; $V_o = 60$ dBmV	d_{im}	typ.	−63	dB
Broadband power gain $I_C = 90$ mA; $V_{CE} = 20$ V	G_p	min. typ.	10 11	dB dB
Noise figure at f = 200 MHz $I_C = 90$ mA; $V_{CE} = 20$ V	F	typ. max.	8 10	dB dB
2nd harmonic distortion at $f_p + f_q = 210$ MHz $I_C = 90$ mA; $V_{CE} = 20$ V; $V_o = 48$ dBmV	d_2	max.	−56	dB

MECHANICAL DATA (see next page)

PRODUCT SAFETY. These devices incorporate beryllium oxide, the dust of which is toxic. The devices are entirely safe provided that the BeO disc is not damaged.

MECHANICAL DATA

Dimensions in mm

Fig. 1 SOT-48.

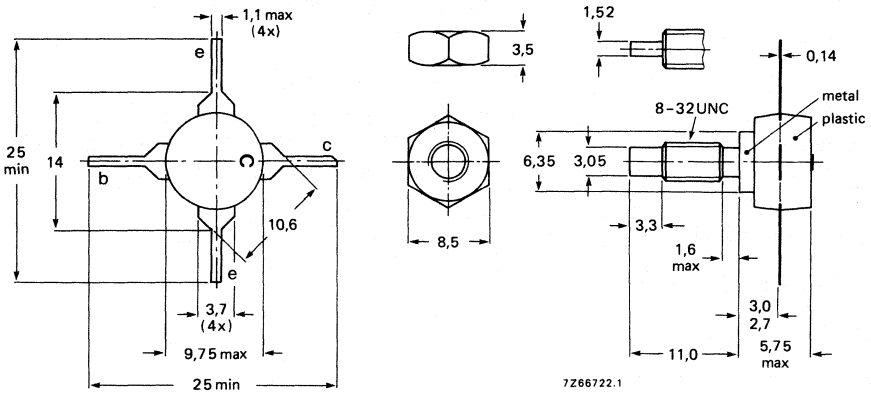

When locking is required an adhesive instead of a lock washer is preferred.

Torque on nut: min. 0,75 Nm
(7,5 kg cm)
max. 0,85 Nm
(8,5 kg cm)

Diameter of clearance hole in heatsink: max. 4,17 mm. Mounting hole to have no burrs at either end. De-burring must leave surface flat; do not chamfer or countersink either end of hole.

RATINGS

Limiting values in accordance with the Absolute Maximum System (IEC 134)

Collector-base voltage (open emitter)	V_{CBO}	max.	30	V
Collector-emitter voltage (R_{BE} = 10 Ω)	V_{CER}	max.	35	V
Collector-emitter voltage (open base)	V_{CEO}	max.	25	V
Emitter-base voltage (open collector)	V_{EBO}	max.	3	V
Collector current (d.c.)	I_C	max.	150	mA
Collector current (peak value); f > 1 MHz	I_{CM}	max.	300	mA
Total power dissipation (d.c.) up to T_h = 160 °C	P_{tot}	max.	2,5	W
Total power dissipation up to T_h = 145 °C; f > 1 MHz	P_{tot}	max.	3,5	W
Storage temperature	T_{stg}		–65 to + 200	°C
Junction temperature	T_j	max.	200	°C

THERMAL RESISTANCE

From junction to mounting base	$R_{th\ j\text{-}mb}$	=	15	K/W
From mounting base to heatsink	$R_{th\ mb\text{-}h}$	=	0,6	K/W

CHARACTERISTICS

$T_j = 25\ ^oC$ unless otherwise specified

Collector cut-off current				
$I_E = 0; V_{CB} = 20\ V$	I_{CBO}	max.	50 μA	
D.C. current gain				
$I_C = 50\ mA; V_{CE} = 20\ V$	h_{FE}	min.	30	←
$I_C = 150\ mA; V_{CE} = 20\ V$	h_{FE}	min.	30	←
Transition frequency at f = 500 MHz				
$I_C = 90\ mA; V_{CE} = 20\ V$	f_T	typ.	3,5 GHz	
$I_C = 150\ mA; V_{CE} = 20\ V$	f_T	typ.	3,5 GHz	
Collector capacitance at f = 1 MHz				
$I_E = I_e = 0; V_{CB} = 20\ V$	C_c	typ.	3,5 pF	
Emitter capacitance at f = 1 MHz				
$I_C = I_c = 0; V_{EB} = 0,5\ V$	C_e	typ.	12 pF	
Feedback capacitance at f = 1 MHz				
$I_C = 10\ mA; V_{CE} = 20\ V$	C_{re}	typ.	1,3 pF	
Collector-stud capacitance at f = 1 MHz	C_{cs}	typ.	2 pF	
Noise figure at optimum source impedance				
$I_C = 90\ mA; V_{CE} = 20\ V; f = 500\ MHz; T_{amb} = 25\ ^oC$	F	typ.	5 dB	←
Maximum unilateral power gain (s_{re} assumed to be zero)				
$G_{UM} = 10 \log \frac{\lvert s_{fe}\rvert^2}{(1 - \lvert s_{ie}\rvert^2)(1 - \lvert s_{oe}\rvert^2)}$				
$I_C = 90\ mA; V_{CE} = 20\ V; f = 500\ MHz; T_{amb} = 25\ ^oC$	G_{UM}	typ.	13,5 dB	

←

CHARACTERISTICS (continued)

Output voltage at $d_{im} = -60$ dB (see Fig. 2)
(DIN 45004B, par. 6.3: 3-tone); $T_{amb} = 25\ ^{o}C$
$I_C = 90$ mA; $V_{CE} = 20$ V; $R_L = 75\ \Omega$
$V_p = V_o$ at $d_{im} = -60$ dB; $f_p = 495,25$ MHz
$V_q = V_o - 6$ dB ; $f_q = 503,25$ MHz
$R_r = V_o - 6$ dB ; $f_r = 505,25$ MHz
measured at $f_{(p+q-r)} = 493,25$ MHz V_o typ.   700 mV

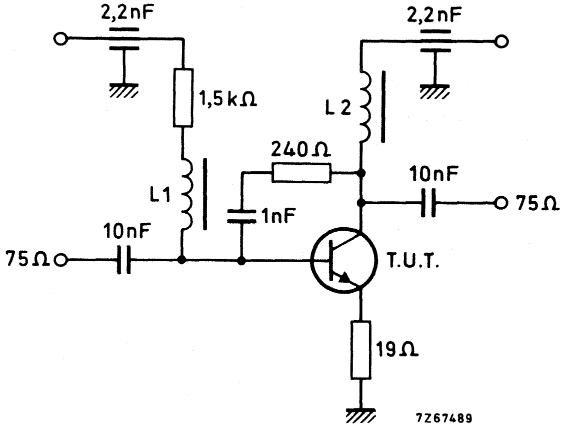

Fig. 2 MATV test circuit.

L1 = L2 = 5 μH Ferroxcube coil (code number: 3122 108 20153)

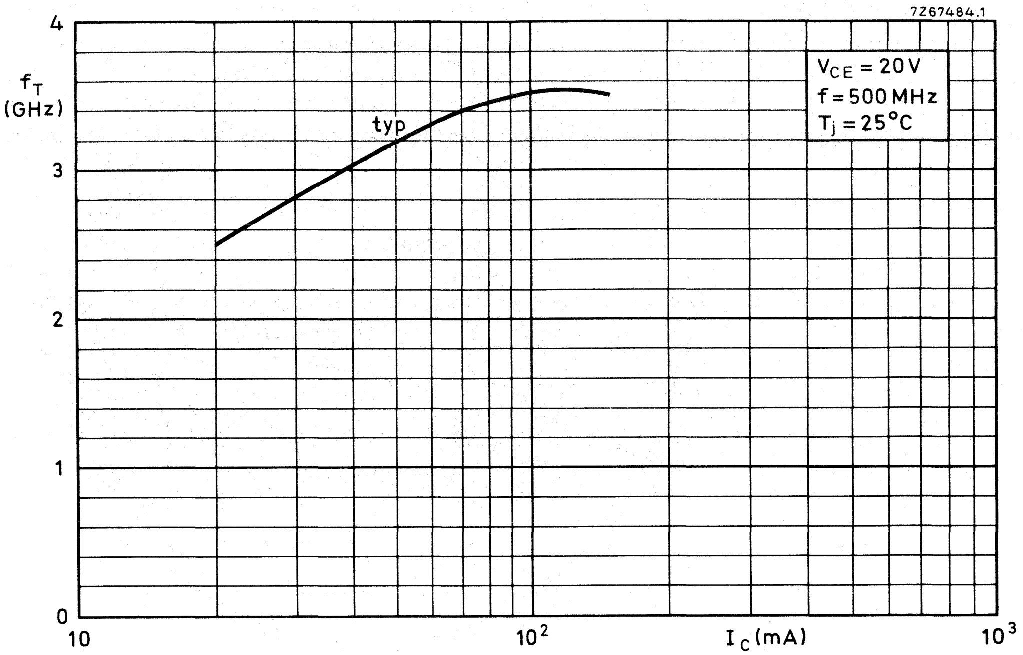

Fig. 3 V_{CE} = 20 V; f = 500 MHz; T_j = 25 °C; typical values.

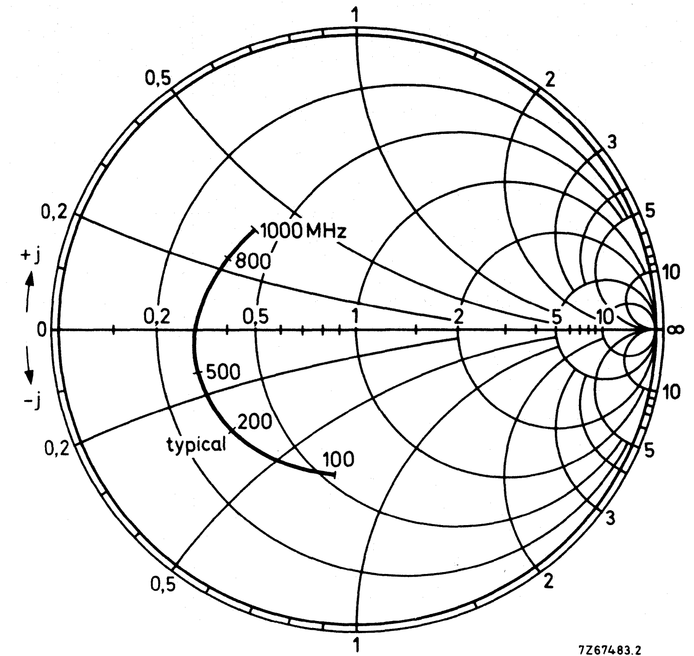

Fig. 4 V_{CE} = 20 V; I_C = 90 mA; T_{amb} = 25 °C; typical values.

Input reflection coefficient s_{ie}

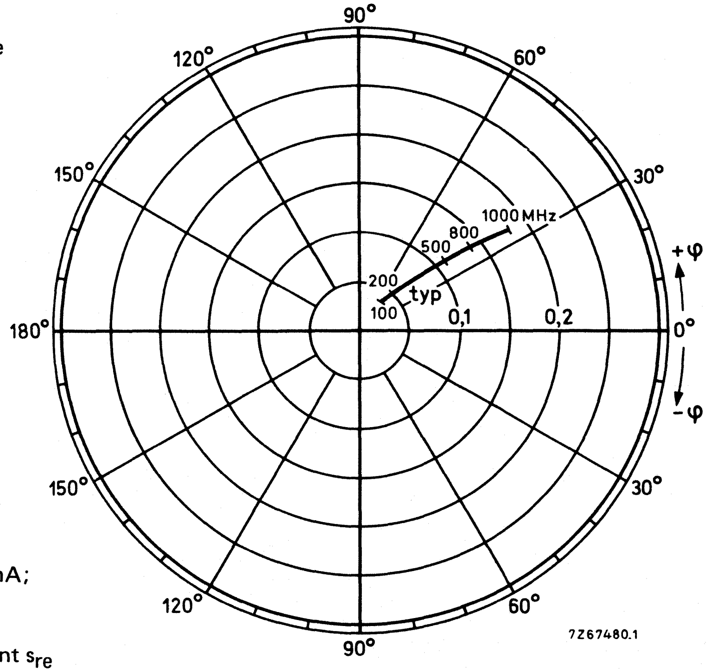

Fig. 5 V_{CE} = 20 V; I_C = 90 mA; T_{amb} = 25 °C; typical values.

Reverse transmission coefficient s_{re}

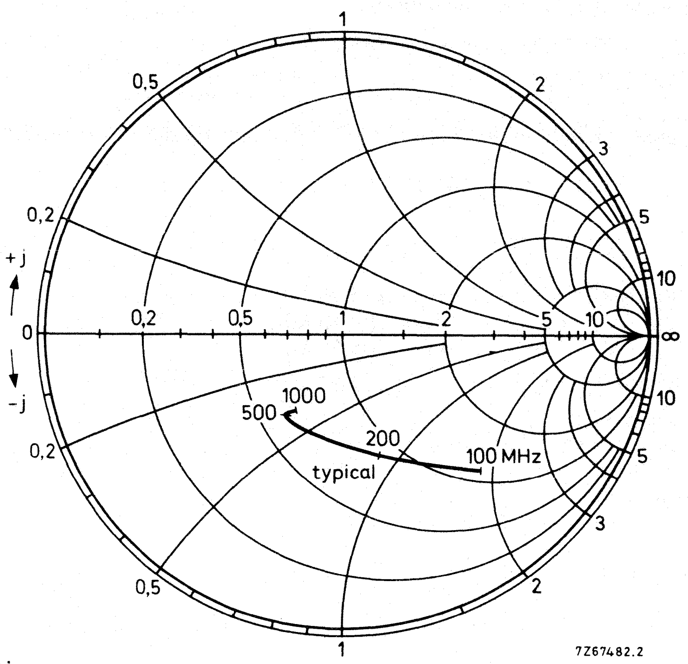

Fig. 6 V_{CE} = 20 V; I_C = 90 mA; T_{amb} = 25 °C; typical values.

Output reflection coefficient s_{oe}

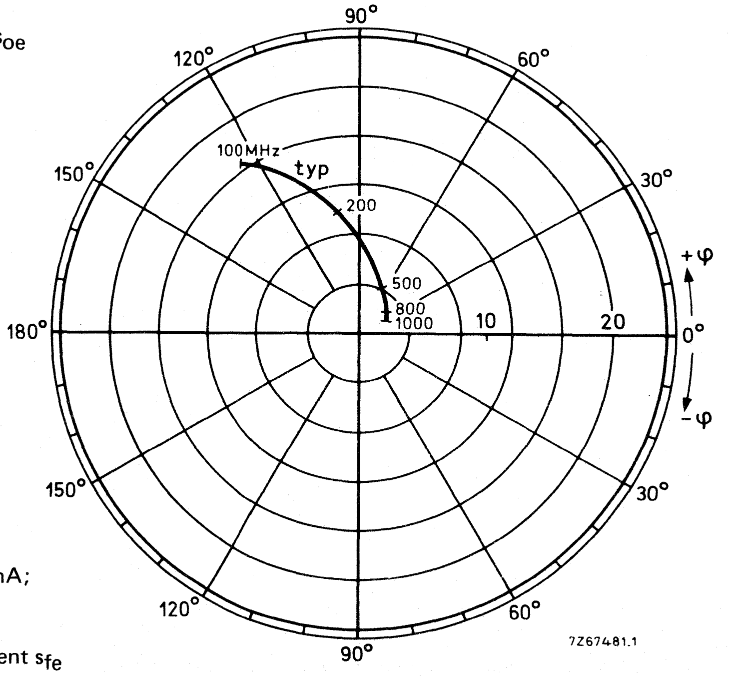

Fig. 7 V_{CE} = 20 V; I_C = 90 mA; T_{amb} = 25 °C; typical values.

Forward transmission coefficient s_{fe}

APPLICATION INFORMATION

T_{amb} = 25 °C unless otherwise specified

Cross modulation distortion (channel 13)*			
I_C = 90 mA; V_{CE} = 20 V; V_o = 48 dBmV	d_{cm}	typ. max.	−61 dB −57 dB
I_C = 90 mA; V_{CE} = 20 V; V_o = 32 dBmV	d_{cm}	typ. max.	−93 dB −89 dB
Intermodulation distortion			
I_C = 90 mA; V_{CE} = 20 V; R_L = 75 Ω			
V_p = V_o = 60 dBmV at f_p = 196,25 MHz V_q = V_o −6 dB at f_q = 203,25 MHz V_r = V_o −6 dB at f_r = 205,25 MHz			
Measured at $f_{(p+q-r)}$ = 194,25 MHz	d_{im}	typ.	−63 dB
Power gain			
I_C = 90 mA; V_{CE} = 20 V	G_p	min. typ.	10 dB 11 dB
Noise figure			
I_C = 90 mA; V_{CE} = 20 V; f = 200 MHz	F	typ. max.	8 dB 10 dB
2nd harmonic distortion			
I_C = 90 mA; V_{CE} = 20 V			
f_p = 66 MHz; f_q = 144 MHz; $f_p + f_q$ = 210 MHz; V_o = 48 dBmV	d_2	max.	−56 dB

---

* In 12-channel measuring equipment; channel 13 unmodulated.
V_o = output level/signal, according to NCTA measuring standard.

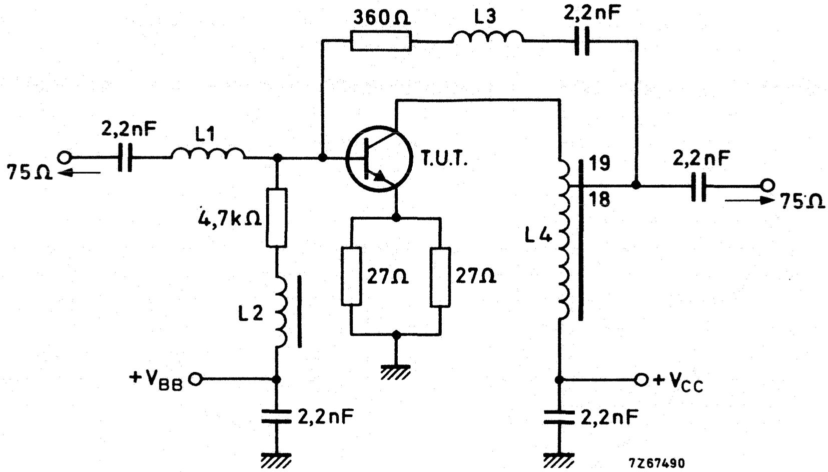

Fig. 8 CATV test circuit.

Frequency range 40 to 300 MHz (flatness gain ± 0,2 dB)			
Return losses input and output		<	−16 dB
Power gain	G_p	typ.	11 dB

L1 = 2 turns closely wound enamelled Cu wire (0,7 mm); int. diam. 3 mm
L2 = 5 μH Ferroxcube coil (code number 3122 108 20153)
L3 = 5 turns closely wound enamelled Cu wire (0,7 mm); int. diam. 4,7 mm
L4 = 19 turns enamelled Cu wire (0,3 mm) on Ferroxcube core (code no. 4322 020 91001)

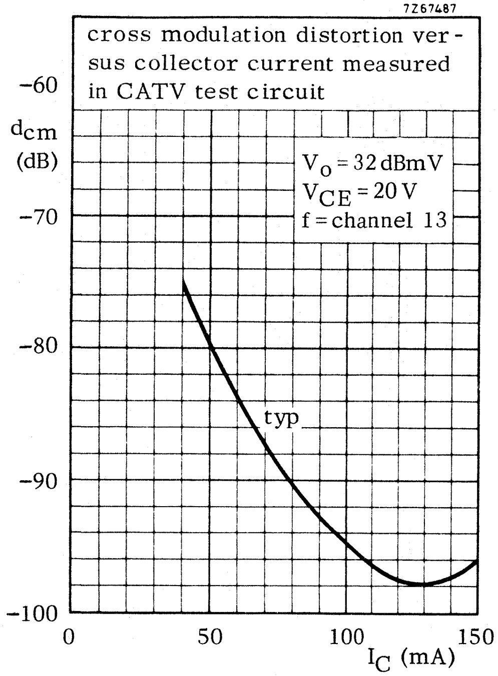

Fig. 9 V_o = 32 dBmV; V_{CE} = 20 V; f = ch. 13; typical values.

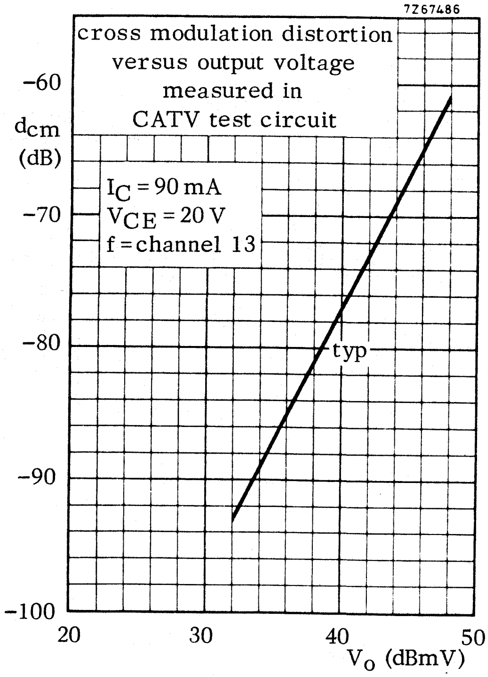

Fig. 10 V_{CE} = 20 V; I_C = 90 mA; f = ch. 13; typical values.

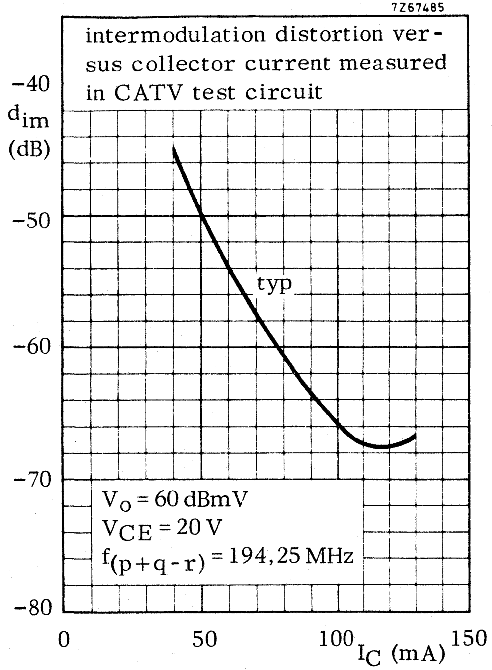

Fig. 11 V_{CE} = 20 V; V_o = 60 dBmV; $f_{(p+q-r)}$ = 194,25 MHz; typical values.

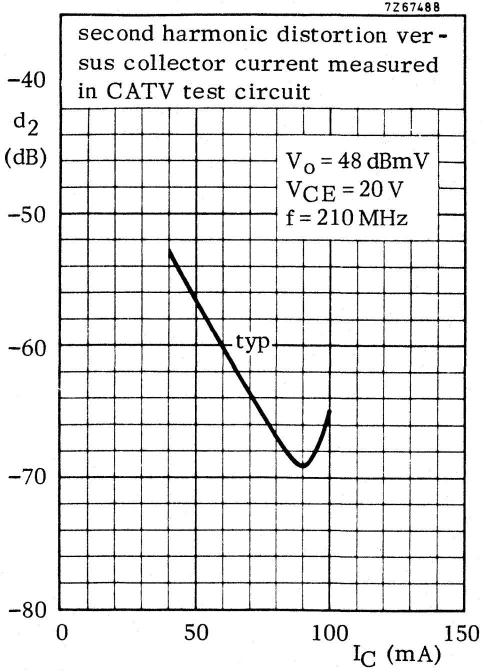

Fig. 12 V_{CE} = 20 V; V_o = 48 dBmV; f = 210 MHz; typical values.

N-P-N H.F. WIDEBAND TRANSISTOR

N-P-N resistance stabilized transistor in a TO-39 metal envelope, with collector connected to the case.

Due to very linear characteristics the transistor features low cross modulation, intermodulation and second harmonic distortion. Thanks to its high transition frequency it has a high power gain combined with excellent wideband properties and low noise up to high frequencies.

The BFR95 is primarily intended for CATV and MATV applications.

QUICK REFERENCE DATA

Collector-base voltage (open emitter)	V_{CBO}	max.	30	V
Collector-emitter voltage (open base)	V_{CEO}	max.	25	V
Collector current (d.c.)	I_C	max.	150	mA
Total power dissipation up to T_{mb} = 125 °C	P_{tot}	max.	1,5	W
Junction temperature	T_j	max.	200	°C
Transition frequency at f = 500 MHz I_C = 80 mA; V_{CE} = 20 V	f_T	typ.	3,5	GHz
Cross modulation distortion (channel 13) I_C = 80 mA; V_{CE} = 18 V; V_o = 48 dBmV	d_{cm}	typ. max.	–61 –57	dB dB
I_C = 80 mA; V_{CE} = 18 V; V_o = 32 dBmV	d_{cm}	typ. max.	–93 –89	dB dB
Intermodulation distortion at $f_{(p + q - r)}$ = 194,25 MHz I_C = 80 mA; V_{CE} = 18 V; V_o = 60 dBmV	d_{im}	typ.	–64	dB
Power gain I_C = 80 mA; V_{CE} = 18 V	G_p	min. typ.	8 9	dB dB
Noise figure at f = 200 MHz I_C = 80 mA; V_{CE} = 18 V	F	typ. max.	9 10	dB dB
Second harmonic distortion at $f_{(p + q)}$ = 210 MHz I_C = 80 mA; V_{CE} = 18 V; V_o = 48 dBmV	d_2	typ.	–62	dB

MECHANICAL DATA (see next page)

MECHANICAL DATA

Dimensions in mm

Fig. 1 TO-39

Collector connected to case

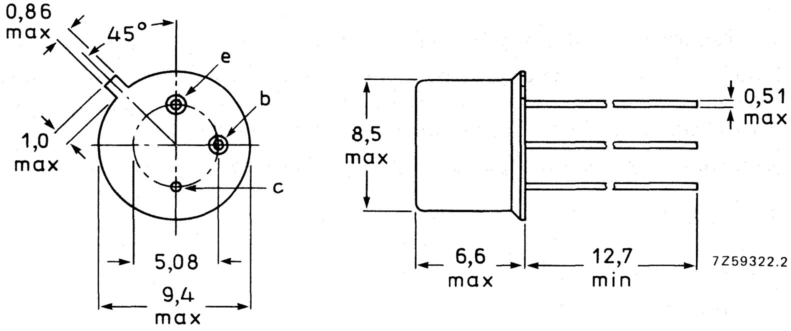

Maximum lead diameter guaranteed only for 12,7 mm.
Accessories: 56245 (distance disc).

RATINGS

Limiting values in accordance with the Absolute Maximum System (IEC 134)

Collector-base voltage (open emitter) note 1	V_{CBO}	max.	30	V
Collector-emitter voltage (R_{BE} = 10 Ω) note 2	V_{CER}	max.	35	V
Collector-emitter voltage (open base) note 2	V_{CEO}	max.	25	V
Emitter-base voltage (open collector) note 3	V_{EBO}	max.	3	V
Collector current (d.c.)	I_C	max.	150	mA
Collector current (peak value); $f > 1$ MHz	I_{CM}	max.	300	mA
Total power dissipation				
up to T_{amb} = 25 °C	P_{tot}	max.	0,7	W
up to T_{mb} = 125 °C	P_{tot}	max.	1,5	W
Storage temperature	T_{stg}		−65 to +200	°C
Junction temperature	T_j	max.	200	°C

THERMAL RESISTANCE

From junction to ambient in free air	$R_{th\ j\text{-}a}$	=	250	K/W
From junction to mounting base	$R_{th\ j\text{-}mb}$	=	50	K/W

Notes

1. At I_C = 100 μA.
2. At I_C = 10 mA.
3. At I_E = 100 μA.

CHARACTERISTICS

T_j = 25 °C unless otherwise specified

Collector cut-off current			
$I_E = 0$; $V_{CB} = 20$ V	I_{CBO}	max.	50 μA
D.C. current gain			
I_C = 50 mA; V_{CE} = 20 V	h_{FE}	min.	30
I_C = 150 mA; V_{CE} = 20 V	h_{FE}	min.	30
Transition frequency at f = 500 MHz			
I_C = 80 mA; V_{CE} = 20 V	f_T	typ.	3,5 GHz
I_C = 150 mA; V_{CE} = 20 V	f_T	typ.	3,5 GHz
Collector capacitance at f = 1 MHz			
$I_E = I_e = 0$; V_{CB} = 20 V	C_c	typ.	3,5 pF
Feedback capacitance at f = 1 MHz			
I_C = 10 mA; V_{CE} = 20 V	C_{re}	typ.	1,6 pF

APPLICATION INFORMATION

Measuring conditions: I_C = 80 mA; V_{CE} = 18 V; T_{amb} = 25 °C

Cross modulation (channel 13) (note)			
V_o = 48 dBmV	d_{cm}	typ. max.	−61 dB −57 dB
V_o = 32 dBmV	d_{cm}	typ. max.	−93 dB −89 dB
Intermodulation distortion			
$V_p = V_o$ = 60 dBmV at f_p = 196,25 MHz			
$V_q = V_o$ −6 dB at f_q = 203,25 MHz			
$V_r = V_o$ −6 dB at f_r = 205,25 MHz			
Measured at $f_{(p+q-r)}$ = 194,25 MHz	d_{im}	typ.	−64 dB
Power gain	G_p	min. typ.	8 dB 9 dB
Noise figure at f = 200 MHz	F	typ. max.	9 dB 10 dB
2nd harmonic distortion at $f_{(p+q)}$ = 210 MHz			
f_p = 66 MHz; f_q = 144 MHz; V_o = 48 dBmV	d_2	typ. max.	−62 dB −56 dB

Note

In 12-channel measuring equipment; channel 13 unmodulated.
V_o = output level/signal, in accordance with NCTA measuring standard.

APPLICATION INFORMATION

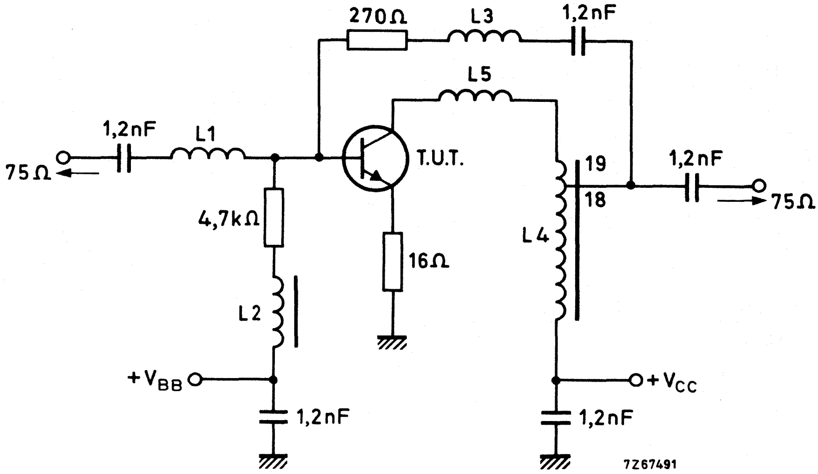

Fig. 2 CATV test circuit.
Frequency range 40 to 300 MHz
Power gain G_p typ. 9 dB

L1 = 2 turns closely wound enamelled Cu wire (0,7 mm); int. dia. 3 mm
L2 = 5 μH Ferroxcube coil (cat. no. 3122 108 20153)
L3 = 3 turns closely wound enamelled Cu wire (0,7 mm); int. dia. 4,7 mm
L4 = 19 turns enamelled Cu wire (0,3 mm) on Ferroxcube core (cat. no. 4322 020 91001)
L5 = 2 turns closely wound enamelled Cu wire (0,7 mm); int. dia. 3 mm.

N-P-N 1 GHz WIDEBAND TRANSISTOR

N-P-N transistor in a plastic SOT-37 envelope. It is primarily intended for use in u.h.f. and microwave amplifiers such as in aerial amplifiers, radar systems, oscilloscopes, spectrum analysers, etc. The transistor features very low intermodulation distortion and high power gain; thanks to its very high transition frequency, it also has excellent wideband properties and low noise up to high frequencies.
P-N-P complement is BFQ32.

QUICK REFERENCE DATA

Collector-base voltage (open emitter)	V_{CBO}	max.	20	V
Collector-emitter voltage (open base)	V_{CEO}	max.	15	V
Collector current (d.c.)	I_C	max.	75	mA
Total power dissipation up to T_{amb} = 60 °C	P_{tot}	max.	500	mW
Junction temperature	T_j	max.	175	°C
Transition frequency at f = 500 MHz I_C = 50 mA; V_{CE} = 10 V	f_T	typ.	5,0	GHz
Feedback capacitance at f = 1 MHz I_C = 10 mA; V_{CE} = 10 V	C_{re}	max.	1,4	pF
Noise figure at optimum source impedance I_C = 50 mA; V_{CE} = 10 V; f = 500 MHz	F	typ.	3,3	dB
Maximum unilateral power gain I_C = 50 mA; V_{CE} = 10 V; f = 500 MHz	G_{UM}	typ.	15,2	dB
Output voltage at d_{im} = –60 dB I_C = 50 mA; V_{CE} = 10 V; R_L = 75 Ω $f_{(p+q-r)}$ = 493,25 MHz	V_o	typ.	500	mV

MECHANICAL DATA

Dimensions in mm

Fig. 1 SOT-37.

Connections
1. Base
2. Emitter
3. Collector

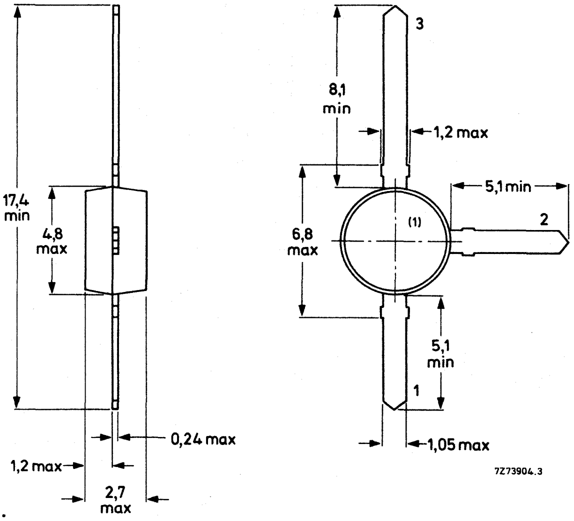

(1) = type number marking.

RATINGS

Limiting values in accordance with the Absolute Maximum System (IEC 134)

Collector-base voltage (open emitter)	V_{CBO}	max.	20	V
Collector-emitter voltage (open base)	V_{CEO}	max.	15	V
Emitter-base voltage (open collector)	V_{EBO}	max.	3	V
Collector current (d.c.)	I_C	max.	75	mA
Collector current (peak value); $f > 1$ MHz	I_{CM}	max.	150	mA
Total power dissipation up to T_{amb} = 60 °C mounted on a fibre-glass print of 40 mm x 35 mm x 1,5 mm	P_{tot}	max.	500	mW
Storage temperature	T_{stg}	−65 to + 175		°C
Junction temperature	T_j	max.	175	°C

THERMAL RESISTANCE

From junction to ambient in free air mounted on a fibre-glass print of 40 mm x 35 mm x 1,5 mm	$R_{th\,j\text{-}a}$	=	230	K/W
→ From junction to case	$R_{th\,j\text{-}c}$	=	70	K/W

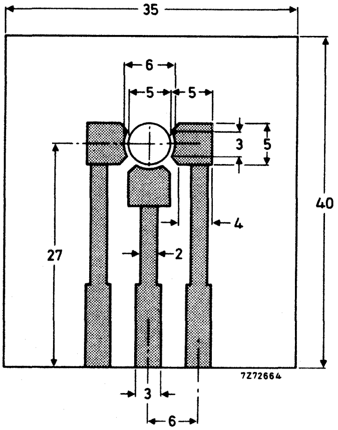

Fig. 2 Requirements for fibre-glass print.

Single-sided 35 μm Cu-clad epoxy fibre-glass print, thickness 1,5 mm.
Tracks are fully tin-lead plated. Dimensions in mm.

CHARACTERISTICS

T_j = 25 °C unless otherwise specified

Collector cut-off current				
$I_E = 0$; $V_{CB} = 10$ V	I_{CBO}	max.	100 nA	
D.C. current gain				
$I_C = 50$ mA; $V_{CE} = 10$ V	h_{FE}	min. typ.	25 50	←
$I_C = 75$ mA; $V_{CE} = 10$ V	h_{FE}	min. typ.	25 52	
Transition frequency at f = 500 MHz				
$I_C = 50$ mA; $V_{CE} = 10$ V	f_T	min. typ.	4,0 GHz 5,0 GHz	←
$I_C = 75$ mA; $V_{CE} = 10$ V	f_T	min. typ.	4,4 GHz 5,5 GHz	
Collector capacitance at f = 1 MHz				
$I_E = I_e = 0$; $V_{CB} = 10$ V	C_c	typ.	1,3 pF	
Emitter capacitance at f = 1 MHz				
$I_C = I_c = 0$; $V_{EB} = 0{,}5$ V	C_e	typ.	6,5 pF	
Feedback capacitance at f = 1 MHz				
$I_C = 10$ mA; $V_{CE} = 10$ V; $T_{amb} = 25$ °C	C_{re}	typ. max.	1,0 pF 1,4 pF	
Noise figure at optimum source impedance				
$I_C = 50$ mA; $V_{CE} = 10$ V; f = 500 MHz; $T_{amb} = 25$ °C	F	typ.	3,3 dB	
$I_C = 50$ mA; $V_{CE} = 10$ V; f = 800 MHz; $T_{amb} = 25$ °C	F	typ.	3,8 dB	

Maximum unilateral power gain (s_{re} assumed to be zero)

$$G_{UM} = 10 \log \frac{|s_{fe}|^2}{(1 - |s_{ie}|^2)(1 - |s_{oe}|^2)}$$

$I_C = 50$ mA; $V_{CE} = 10$ V; f = 500 MHz; $T_{amb} = 25$ °C	G_{UM}	typ.	15,2 dB	←
$I_C = 50$ mA; $V_{CE} = 10$ V; f = 800 MHz; $T_{amb} = 25$ °C	G_{UM}	typ.	11,5 dB	

←

CHARACTERISTICS (continued)

→ Output voltage at d_{im} = −60 dB (see Fig. 3)
(DIN 45004B, par. 6.3: 3-tone); T_{amb} = 25 °C
I_C = 50 mA; V_{CE} = 10 V; R_L = 75 Ω
$V_p = V_o$ at d_{im} = −60 dB; f_p = 495,25 MHz
$V_q = V_o$ −6 dB ; f_q = 503,25 MHz
$R_r = V_o$ −6 dB ; f_r = 505,25 MHz
measured at $f_{(p+q-r)}$ = 493,25 MHz — V_o typ. 500 mV

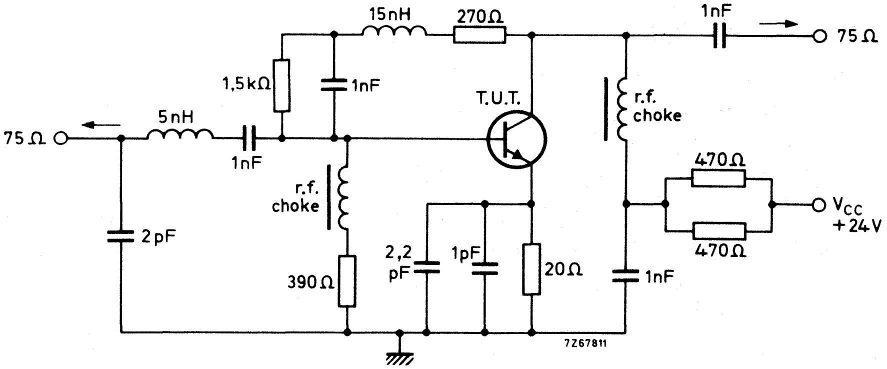

Fig. 3 Intermodulation test circuit.

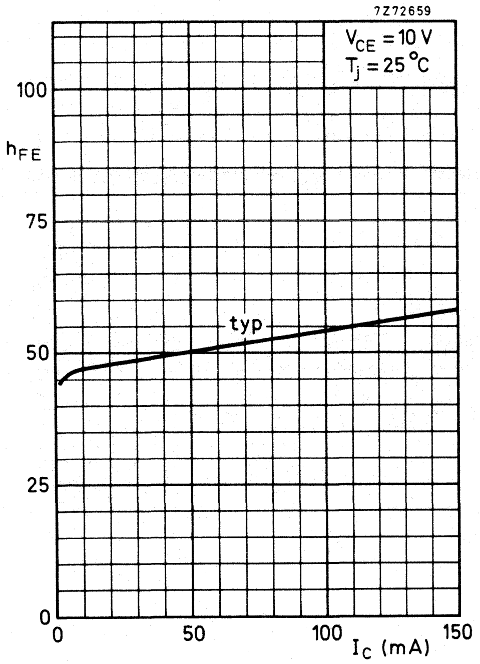

Fig. 4 V_{CE} = 10 V; T_j = 25 °C; typ. values.

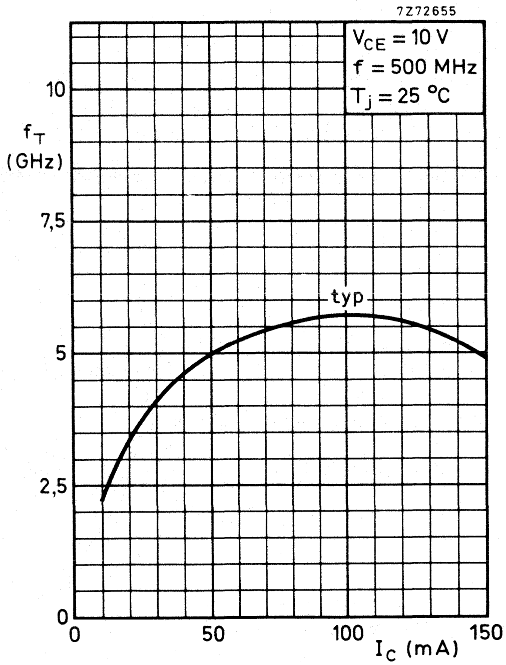

Fig. 5 V_{CE} = 10 V; f = 500 MHz; T_j = 25 °C; typical values.

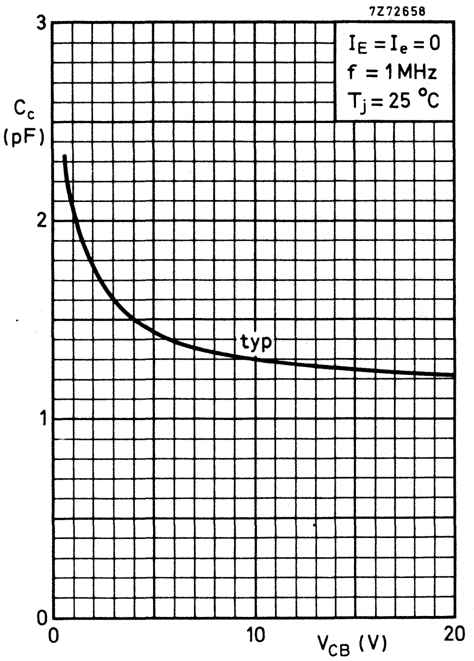

Fig. 6 $I_E = I_e = 0$; f = 1 MHz; T_j = 25 °C; typical values.

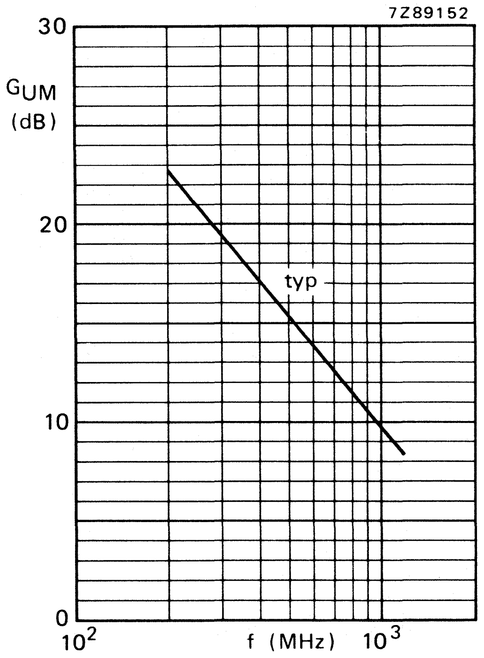

Fig. 7 V_{CE} = 10 V; I_C = 50 mA; T_{amb} = 25 °C; typical values.

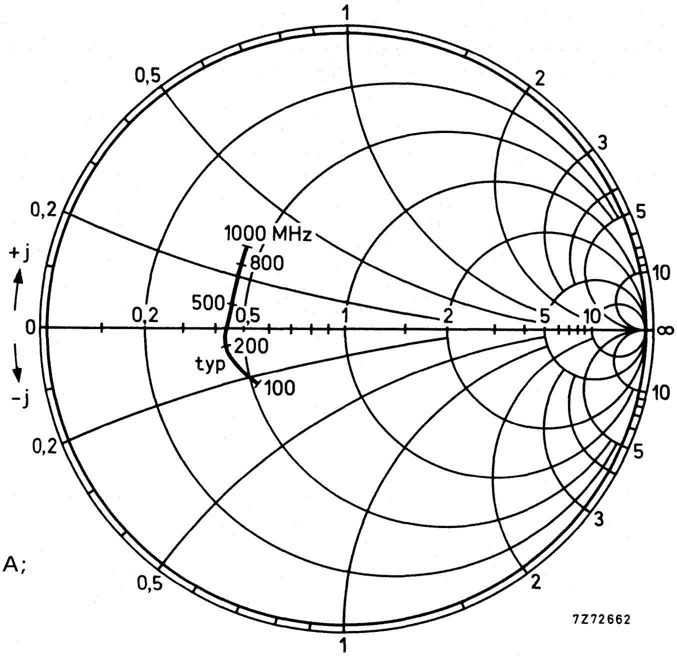

Fig. 8 V_{CE} = 10 V; I_C = 50 mA; T_{amb} = 25 °C; typical values.

Input impedance derived from input reflection coefficient s_{ie} co-ordinates in ohm x 50

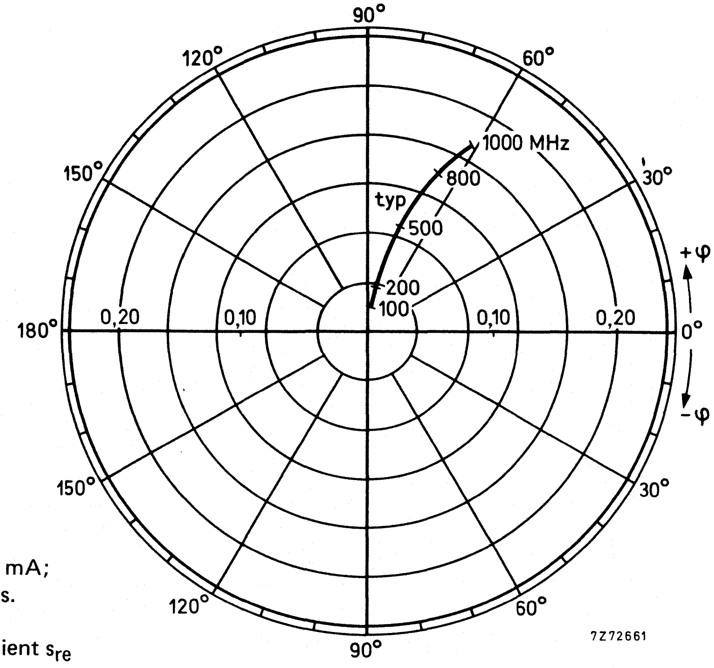

Fig. 9 V_{CE} = 10 V; I_C = 50 mA; T_{amb} = 25 °C; typical values.

Reverse transmission coefficient s_{re}

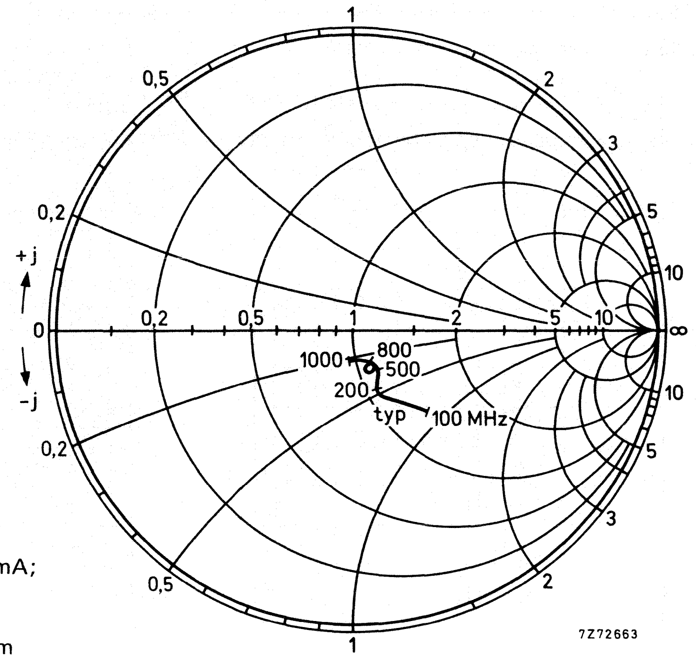

Fig. 10 V_{CE} = 10 V; I_C = 50 mA; T_{amb} = 25 °C; typical values.

Output impedance derived from output reflection coefficient s_{oe} co-ordinates in ohm x 50

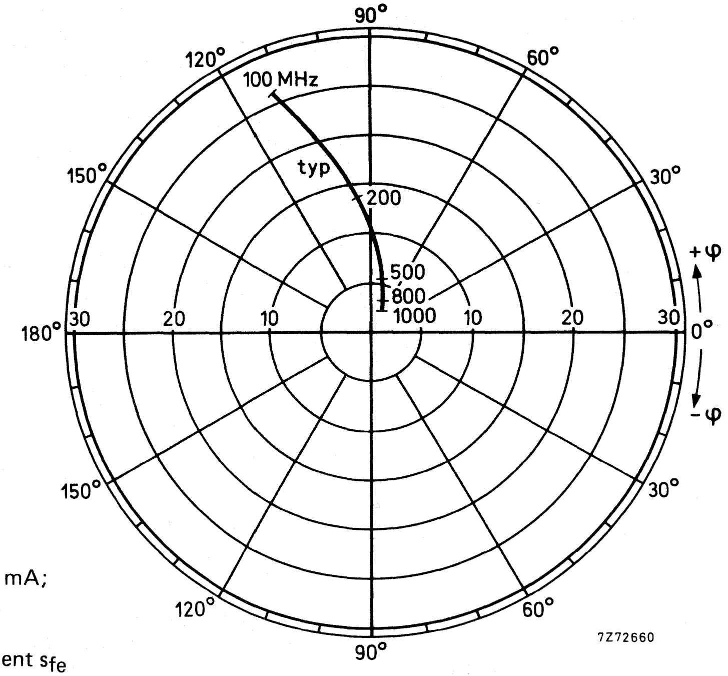

Fig. 11 V_{CE} = 10 V; I_C = 50 mA; T_{amb} = 25 °C; typical values.

Forward transmission coefficient s_{fe}

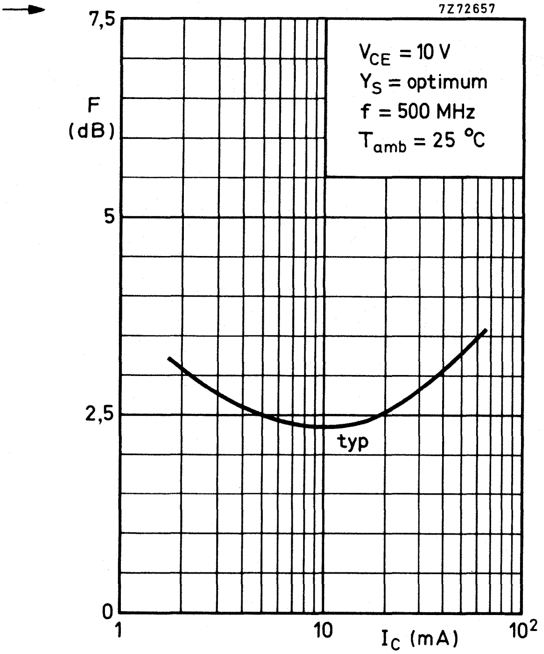

Fig. 12 V_{CE} = 10 V; f = 500 MHz; Y_S = optimum; T_{amb} = 25 °C; typical values.

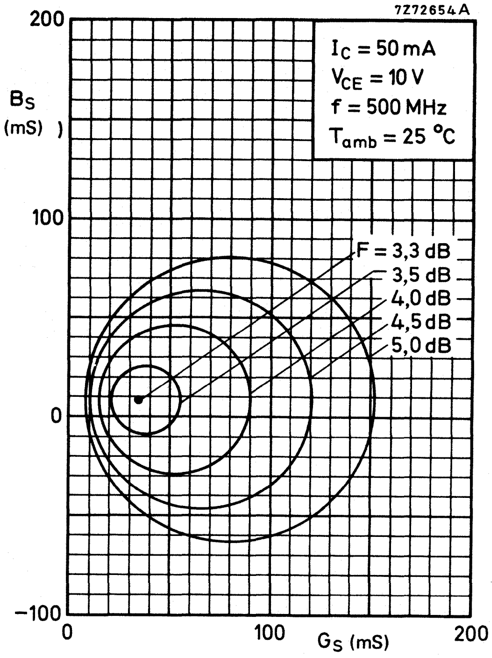

Fig. 13 Circles of constant noise figure. I_C = 50 mA; V_{CE} = 10 V; f = 500 MHz; T_{amb} = 25 °C; typical values.

N-P-N 1 GHz WIDEBAND TRANSISTOR

N-P-N transistor in a plastic SOT-37 envelope, primarily intended for MATV applications. The device features excellent output voltage capabilities. P-N-P complement is BFQ32S.

QUICK REFERENCE DATA

Collector-base voltage (open emitter)	V_{CBO}	max.	20	V
Collector-emitter voltage (open base)	V_{CEO}	max.	15	V
Collector current (d.c.)	I_C	max.	100	mA
Total power dissipation up to $T_{amb} = 70\ ^oC$	P_{tot}	max.	700	mW
Junction temperature	T_j	max.	175	^oC
Transition frequency at f = 500 MHz $I_C = 70$ mA; $V_{CE} = 10$ V	f_T	typ.	5,0	GHz
Feedback capacitance at f = 1 MHz $I_C = 0$; $V_{CE} = 10$ V	C_{re}	typ.	1,0	pF
Noise figure at optimum source impedance $I_C = 70$ mA; $V_{CE} = 10$ V; f = 800 MHz	F	typ.	4,0	dB
Maximum unilateral power gain $I_C = 70$ mA; $V_{CE} = 10$ V; f = 800 MHz	G_{UM}	typ.	11,5	dB
Output voltage at $d_{im} = -60$ dB (see Fig. 3) $I_C = 70$ mA; $V_{CE} = 10$ V; $R_L = 75\ \Omega$ $f_{(p+q-r)} = 793,25$ MHz	V_o	typ.	700	mV
Output power at 1 dB gain compression	P_{L1}	typ.	+ 21	dBm
Third order intercept point	ITO	typ.	+ 40	dBm

MECHANICAL DATA

SOT-37 (see Fig. 1).

MECHANICAL DATA

Dimensions in mm

Fig. 1 SOT-37.

Connections

1. Base
2. Emitter
3. Collector

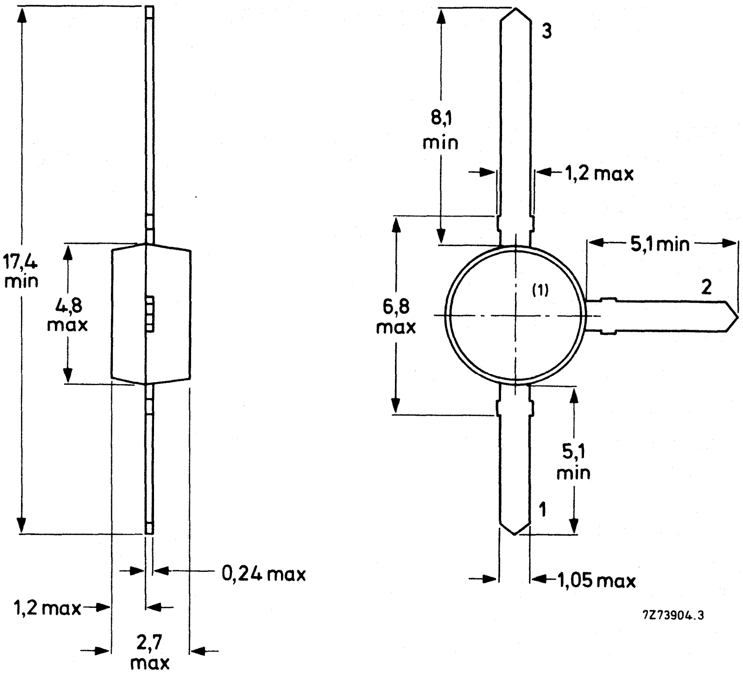

(1) = type number marking.

RATINGS

Limiting values in accordance with the Absolute Maximum System (IEC 134)

Collector-base voltage (open emitter)	V_{CBO}	max.	20	V
Collector-emitter voltage (open base)	V_{CEO}	max.	15	V
Emitter-base voltage (open collector)	V_{EBO}	max.	3	V
Collector current (d.c.)	I_C	max.	100	mA
Total power dissipation up to T_{amb} = 70 °C mounted on a fibre-glass print (see Fig. 2) of 50 mm x 50 mm x 1,5 mm	P_{tot}	max.	700	mW
Storage temperature	T_{stg}	−65 to + 175		°C
Junction temperature	T_j	max.	175	°C

THERMAL RESISTANCE

From junction to ambient in free air mounted on a fibre-glass print (see Fig. 2) of 50 mm x 50 mm x 1,5 mm	$R_{th\ j\text{-}a}$	=	150	K/W
→ From junction to case	$R_{th\ j\text{-}c}$	=	50	K/W

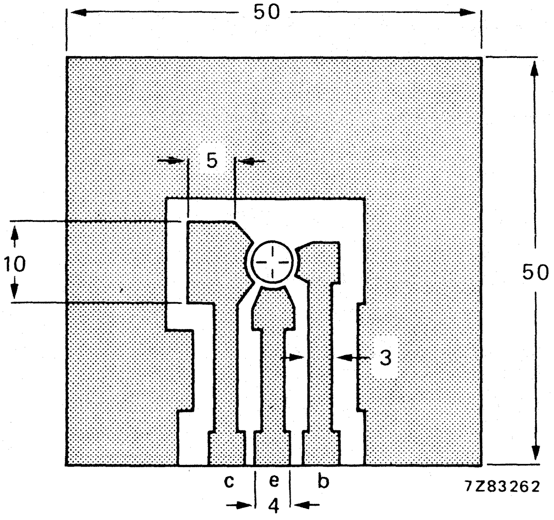

Fig. 2 Requirements for fibre-glass print. (Dimensions in mm.)
Single-sided 35 μm Cu-clad epoxy fibre-glass print, thickness
1,5 mm. Tracks are fully tin-lead plated. Shaded area is Cu.

CHARACTERISTICS

T_j = 25 °C unless otherwise specified

Collector cut-off current $I_E = 0$; $V_{CB} = 10$ V	I_{CBO}	max.	100	nA	
D.C. current gain $I_C = 70$ mA; $V_{CE} = 10$ V	h_{FE}	min.	25		←
Transition frequency at f = 500 MHz $I_C = 70$ mA; $V_{CE} = 10$ V	f_T	typ.	5,0	GHz	
Collector capacitance at f = 1 MHz $I_E = I_e = 0$; $V_{CB} = 10$ V	C_c	typ.	1,5	pF	
Emitter capacitance at f = 1 MHz $I_C = I_c = 0$; $V_{EB} = 0,5$ V	C_e	typ.	6,5	pF	
Feedback capacitance at f = 1 MHz $I_C = 0$; $V_{CE} = 10$ V	C_{re}	typ.	1,0	pF	←
Noise figure at optimum source impedance $I_C = 70$ mA; $V_{CE} = 10$ V; f = 800 MHz; $T_{amb} = 25$ °C	F	typ.	4,0	dB	

Maximum unilateral power gain (s_{re} assumed to be zero)

$$G_{UM} = 10 \log \frac{|s_{fe}|^2}{(1 - |s_{ie}|^2)\,(1 - |s_{oe}|^2)}$$

$I_C = 70$ mA; $V_{CE} = 10$ V; f = 800 MHz; $T_{amb} = 25$ °C	G_{UM}	typ.	11,5	dB

←

Output voltage at d_{im} = –60 dB (see Figs 3 and 5) (DIN45004B, par. 6.3: 3-tone) I_C = 70 mA; V_{CE} = 10 V; R_L = 75 Ω; T_{amb} = 25 °C $V_p = V_o$ at d_{im} = –60 dB; f_p = 795,25 MHz $V_q = V_o$ –6 dB; f_q = 803,25 MHz $V_r = V_o$ –6 dB; f_r = 805,25 MHz Measured at $f_{(p+q-r)}$ = 793,25 MHz	V_o	typ.	700	mV
Second harmonic distortion (see Figs 3 and 6) I_C = 70 mA; V_{CE} = 10 V; R_L = 75 Ω; T_{amb} = 25 °C $V_p = V_o$ = 316 mV = 50 dBmV; f_p = 250 MHz $V_q = V_o$ = 316 mV = 50 dBmV; f_q = 560 MHz measured at $f_{(p+q)}$ = 810 MHz	d_2	typ.	–52	dB
Output power at 1 dB gain compression (see Fig. 3) I_C = 70 mA; V_{CE} = 10 V R_L = 75 Ω; T_{amb} = 25 °C measured at f = 800 MHz	P_{L1}	typ.	+ 21	dBm
Third order intercept point (see Fig. 3) I_C = 70 mA; V_{CE} = 10 V R_L = 75 Ω; T_{amb} = 25 °C P_p = ITO – 6 dB; f_p = 800 MHz P_q = ITO – 6 dB; f_q = 801 MHz and at $f_{(2p-q)}$ = 799 MHz	ITO	typ.	+ 40	dBm

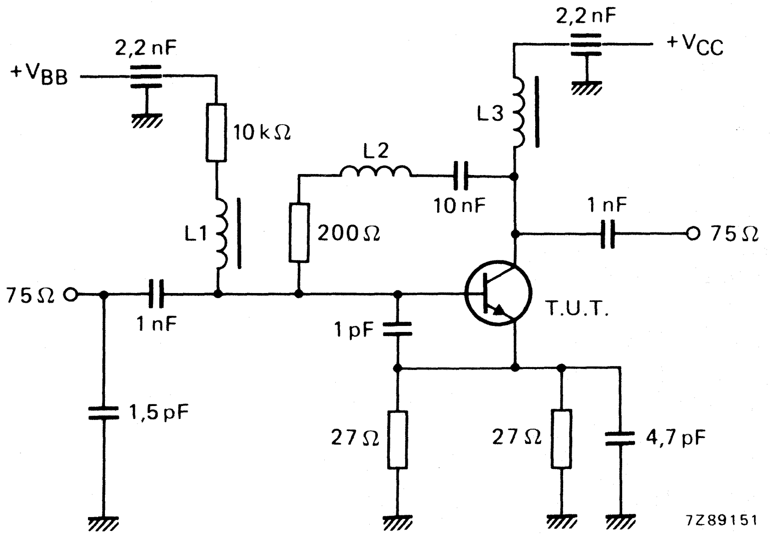

Fig. 3 Intermodulation distortion and second harmonic distortion test circuit.

L1 = L3 = 5 μH micro choke
L2 = 1½ turns Cu wire (0,4 mm); internal diameter 3,0 mm; winding pitch 1 mm

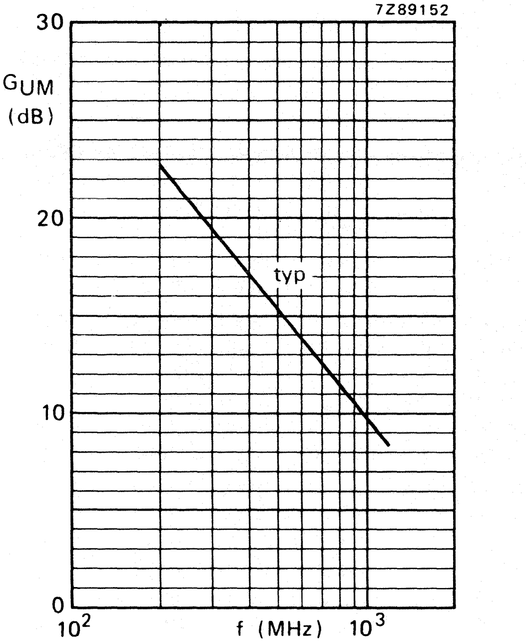

Fig. 4 V_{CE} = 10 V; I_C = 70 mA; T_{amb} = 25 °C; typical values.

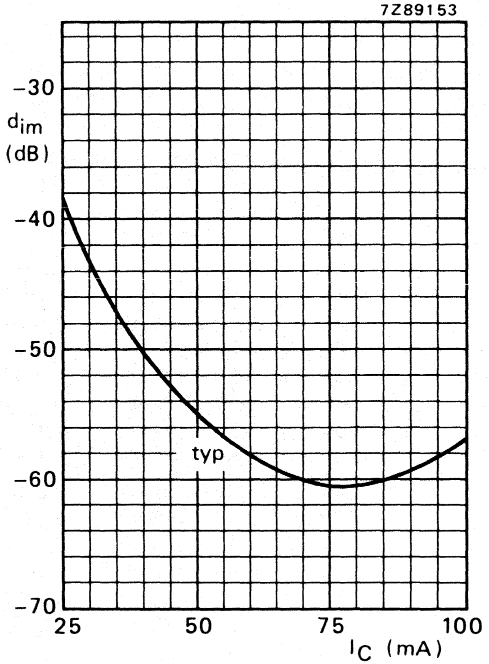

Fig. 5.

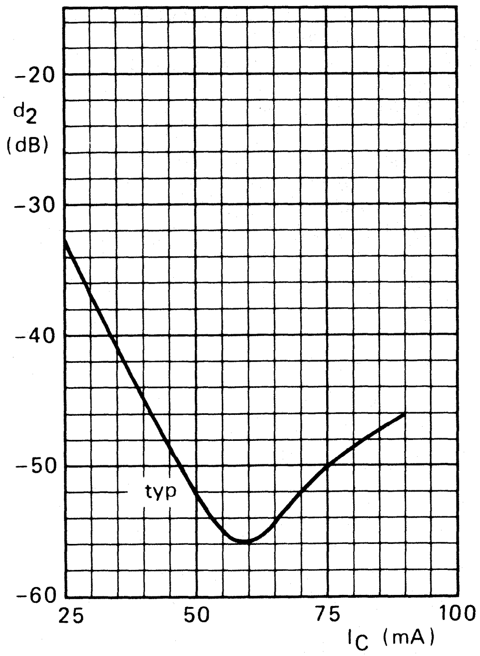

Fig. 6.

Intermodulation distortion (Fig. 5) and second harmonic distortion (Fig. 6) are measured in circuit (see Fig. 3).

Fig. 5 V_{CE} = 10 V; V_o = 700 mV = 56,9 dBmV; $f_{(p+q-r)}$ = 793,25 MHz; T_{amb} = 25 °C; typ. values.

Fig. 6 V_{CE} = 10 V; V_o = 316 mV = 50 dBmV; $f_{(p+q)}$ = 810 MHz; T_{amb} = 25 °C; typ. values.

→ **s-parameters** (common emitter) at V_{CE} = 5 V; T_{amb} = 25 °C; typical values.

I_C mA	f MHz	s_{ie}	s_{re}	s_{fe}	s_{oe}	G_{UM} dB
5	40	0,75/ −41,5°	0,026/+69,1°	15,1/+155,2°	0,93/ −17,4°	35,9
	200	0,62/−128,1°	0,064/+41,9°	7,1/+106,9°	0,53/ −43,3°	20,6
	500	0,55/−174,6°	0,087/+47,0°	3,2/ +79,8°	0,40/ −53,2°	12,4
	800	0,56/+158,7°	0,115/+56,5°	2,1/ +65,0°	0,39/ −63,2°	8,8
	1000	0,58/+146,7°	0,135/+59,2°	1,7/ +56,6°	0,39/ −72,5°	7,1
	1200	0,61/+135,5°	0,159/+61,7°	1,4/ +48,9°	0,39/ −83,0°	5,7
10	40	0,60/ −59,1°	0,022/+64,1°	24,3/+147,2°	0,86/ −26,6°	35,5
	200	0,54/−146,1°	0,050/+49,4°	9,1/+100,7°	0,38/ −54,7°	21,4
	500	0,50/+175,8°	0,087/+59,3°	3,9/ +78,6°	0,27/ −62,8°	13,4
	800	0,52/+152,4°	0,129/+63,7°	2,5/ +65,8°	0,27/ −72,2°	9,7
	1000	0,53/+141,0°	0,157/+63,9°	2,1/ +58,0°	0,27/ −80,7°	8,2
	1200	0,56/+130,7°	0,186/+63,3°	1,7/ +51,2°	0,27/ −90,9°	6,6
30	40	0,39/−105,6°	0,015/+60,7°	39,6/+133,3°	0,69/ −44,1°	35,5
	200	0,44/−168,4°	0,041/+65,9°	11,1/ +94,3°	0,23/ −78,2°	22,1
	500	0,46/+165,1°	0,094/+70,3°	4,7/ +77,3°	0,16/ −88,4°	14,6
	800	0,48/+145,4°	0,146/+69,2°	3,0/ +66,5°	0,16/ −98,3°	10,8
	1000	0,51/+135,6°	0,175/+66,6°	2,5/ +60,1°	0,16/−109,3°	9,4
	1200	0,53/+126,2°	0,206/+64,2°	2,1/ +54,0°	0,17/−119,7°	8,0
50	40	0,37/−129,3°	0,013/+63,4°	44,6/+127,8°	0,62/ −51,4°	35,7
	200	0,43/−174,7°	0,040/+71,5°	11,5/ +92,5°	0,19/ −89,2°	22,7
	500	0,45/+162,4°	0,095/+72,7°	4,8/ +76,8°	0,14/−101,5°	14,7
	800	0,48/+143,4°	0,151/+70,1°	3,1/ +66,5°	0,14/−111,5°	11,1
	1000	0,50/+134,3°	0,182/+67,4°	2,5/ +60,4°	0,14/−121,5°	9,3
	1200	0,52/+124,9°	0,215/+64,8°	2,1/ +54,6°	0,15/−130,7°	7,9
70	40	0,38/−141,7°	0,011/+65,1°	46,9/+124,9°	0,57/ −55,8°	35,8
	200	0,43/−177,6°	0,040/+73,7°	11,6/ +91,6°	0,18/ −96,3°	22,3
	500	0,46/+161,2°	0,095/+73,9°	4,9/ +76,5°	0,13/−109,5°	14,9
	800	0,49/+143,1°	0,150/+70,6°	3,1/ +66,4°	0,13/−120,7°	11,1
	1000	0,49/+133,5°	0,186/+67,7°	2,5/ +60,2°	0,14/−126,2°	9,2
	1200	0,52/+124,1°	0,218/+65,0°	2,1/ +54,6°	0,15/−135,3°	7,9

s-parameters (common emitter) at V_{CE} = 10 V; T_{amb} = 25 °C; typical values.

I_C mA	f MHz	s_{ie}	s_{re}	s_{fe}	s_{oe}	G_{UM} dB
5	40	0,77/ −38,9°	0,023/+69,1°	15,2/+156,2°	0,93/ −15,4°	36,2
	200	0,62/−124,0°	0,059/+43,1°	7,4/+108,3°	0,57/ −38,0°	21,2
	500	0,54/−172,5°	0,081/+48,0°	3,4/ +80,8°	0,45/ −46,8°	13,1
	800	0,55/+159,9°	0,106/+57,8°	2,2/ +65,9°	0,43/ −57,1°	9,3
	1000	0,56/+147,2°	0,126/+61,5°	1,8/ +57,5°	0,43/ −64,9°	7,6
	1200	0,58/+135,9°	0,150/+64,4°	1,5/ +50,1°	0,42/ −74,7°	6,1
10	40	0,62/ −54,5°	0,020/+64,9°	24,5/+148,7°	0,87/ −23,5°	36,0
	200	0,53/−142,3°	0,046/+49,6°	9,6/+102,0°	0,42/ −47,8°	21,9
	500	0,48/+177,6°	0,080/+59,4°	4,2/ +79,4°	0,31/ −54,2°	14,0
	800	0,50/+153,2°	0,118/+64,0°	2,7/ +66,4°	0,31/ −63,5°	10,3
	1000	0,52/+142,3°	0,143/+64,1°	2,2/ +59,1°	0,31/ −70,0°	8,7
	1200	0,54/+131,8°	0,168/+64,3°	1,8/ +52,4°	0,30/ −79,5°	7,1
30	40	0,41/ −94,4°	0,014/+62,2°	40,9/+135,0°	0,72/ −39,2°	36,2
	200	0,42/−164,6°	0,039/+65,5°	11,8/ +95,1°	0,25/ −64,5°	22,6
	500	0,42/+167,0°	0,087/+70,4°	4,9/ +77,9°	0,19/ −71,1°	14,8
	800	0,45/+146,6°	0,136/+69,3°	3,2/ +67,1°	0,18/ −79,1°	11,2
	1000	0,47/+136,6°	0,166/+67,2°	2,6/ +60,6°	0,18/ −83,8°	9,5
	1200	0,49/+126,3°	0,196/+65,0°	2,2/ +54,6°	0,17/ −95,1°	8,2
50	40	0,36/−114,4°	0,012/+62,7°	46,5/+129,6°	0,63/ −45,7°	36,1
	200	0,40/−171,0°	0,038/+70,4°	12,3/ +93,1°	0,20/ −71,4°	22,7
	500	0,41/+163,9°	0,090/+72,4°	5,1/ +77,1°	0,16/ −79,7°	15,1
	800	0,44/+144,7°	0,140/+70,1°	3,3/ +66,7°	0,15/ −86,0°	11,4
	1000	0,47/+135,3°	0,168/+67,3°	2,7/ +60,8°	0,14/ −95,3°	9,8
	1200	0,49/+125,2°	0,197/+65,0°	2,3/ +55,2°	0,14/−106,6°	8,5
70	40	0,35/−125,4°	0,012/+63,6°	49,1/+125,7°	0,58/ −49,5°	36,2
	200	0,40/−173,7°	0,038/+72,7°	12,4/ +92,0°	0,18/ −74,8°	22,8
	500	0,41/+162,6°	0,091/+73,2°	5,2/ +76,7°	0,15/ −82,0°	15,2
	800	0,44/+144,1°	0,143/+70,2°	3,3/ +66,4°	0,14/ −87,4°	11,5
	1000	0,46/+134,6°	0,175/+67,3°	2,7/ +60,2°	0,13/ −95,3°	9,7
	1200	0,48/+124,1°	0,200/+64,8°	2,3/ +54,6°	0,13/−109,5°	8,4

Conditions for Figs 7 and 8:
V_{CE} = 10 V; I_C = 70 mA;
T_{amb} = 25 °C; typical values.

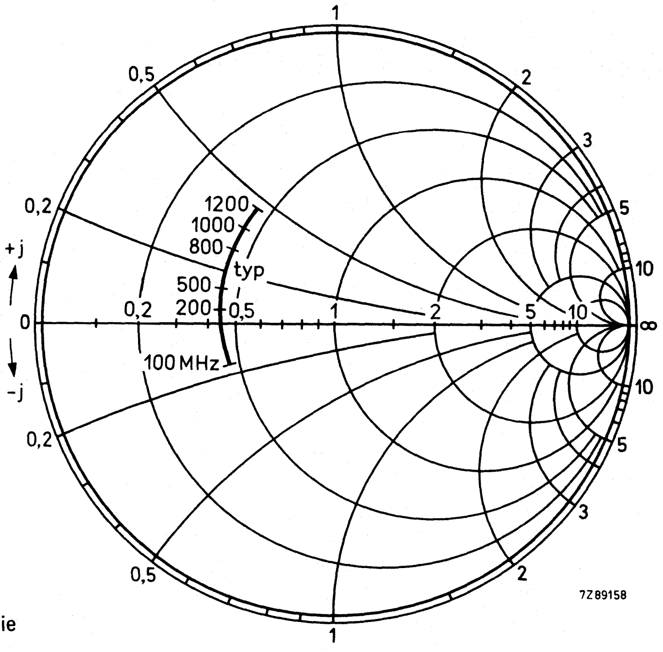

Fig. 7 Input impedance derived from input reflection coefficient s_{ie} co-ordinates in ohm x 50.

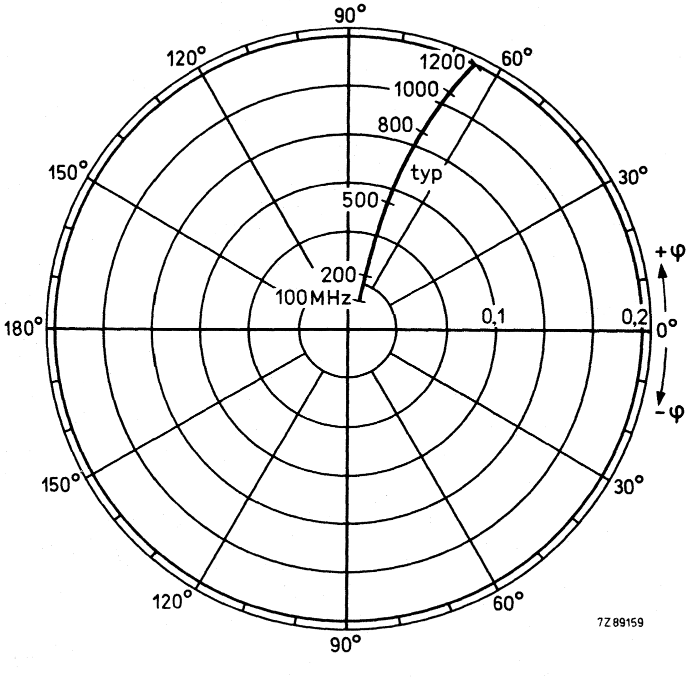

Fig. 8 Reverse transmission coefficient s_{re}.

Conditions for Figs 9 and 10:
$V_{CE} = 10$ V; $I_C = 70$ mA;
$T_{amb} = 25$ °C; typical values.

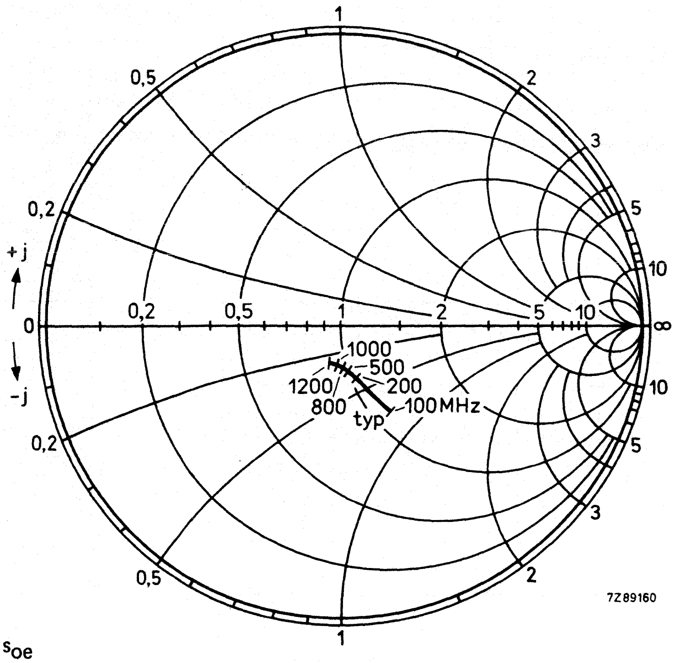

Fig. 9 Output impedance derived from output reflection coefficient s_{oe} co-ordinates in ohm x 50.

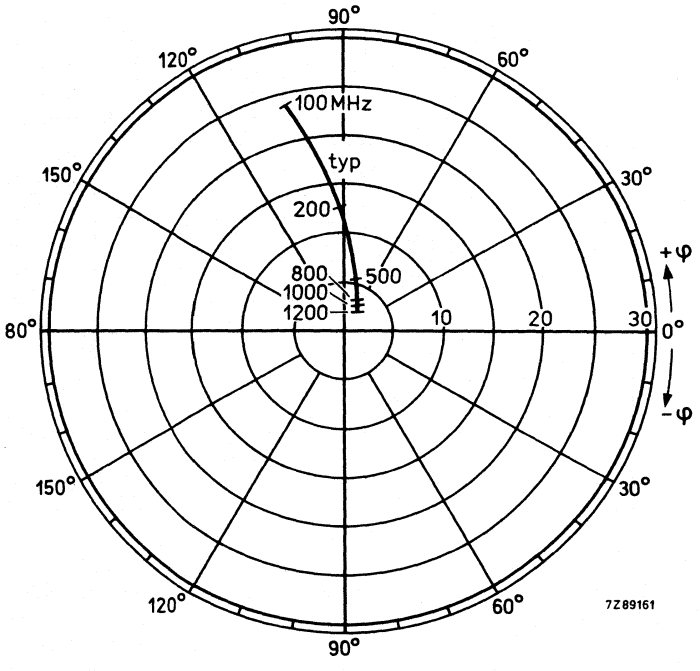

Fig. 10 Forward transmission coefficient s_{fe}.

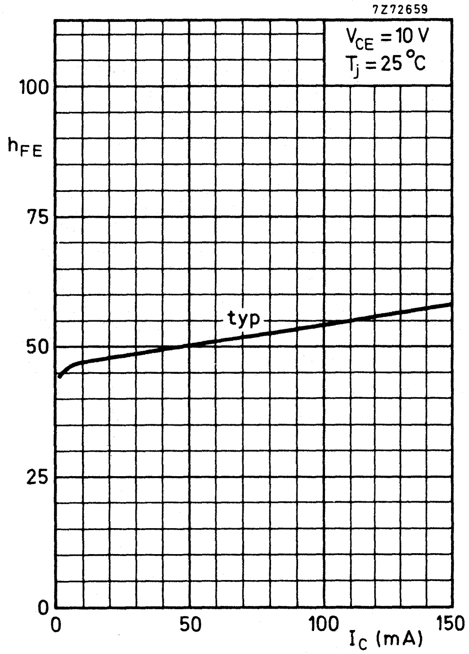

Fig. 11 V_{CE} = 10 V; T_j = 25 °C; typical values.

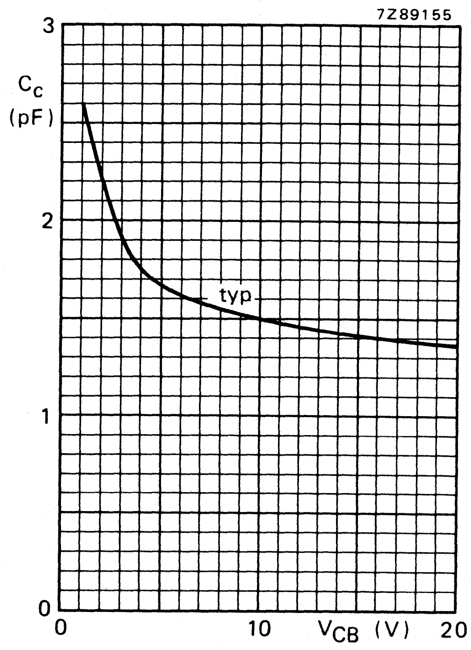

Fig. 12 $I_E = I_e = 0$; f = 1 MHz; T_j = 25 °C; typical values.

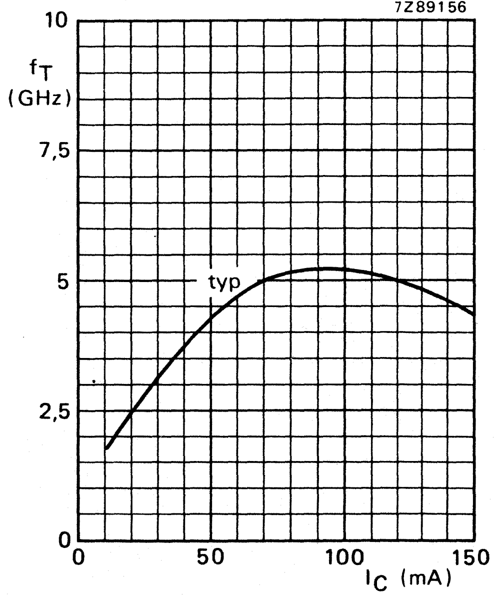

Fig. 13 V_{CE} = 10 V; f = 500 MHz; T_j = 25 °C; typical values.

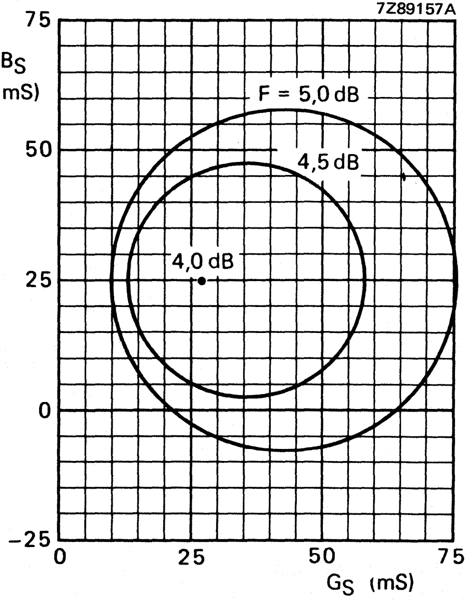

Fig. 14 Circles of constant noise figure. V_{CE} = 10 V; I_C = 70 mA; f = 800 MHz; T_{amb} = 25 °C; typical values.

CLASS-B OPERATION

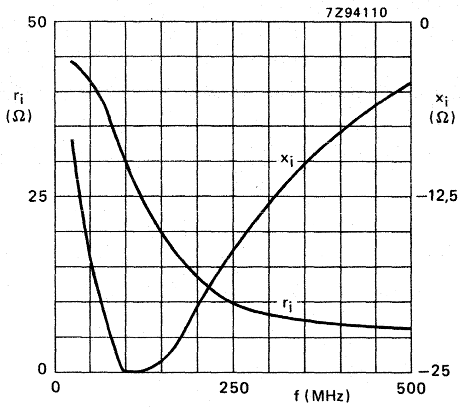

Fig. 15 Input impedance (series components).

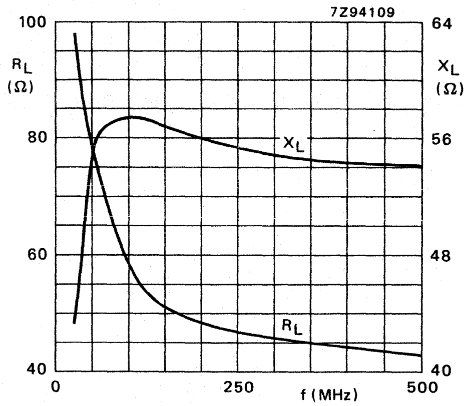

Fig. 16 Load impedance (series components).

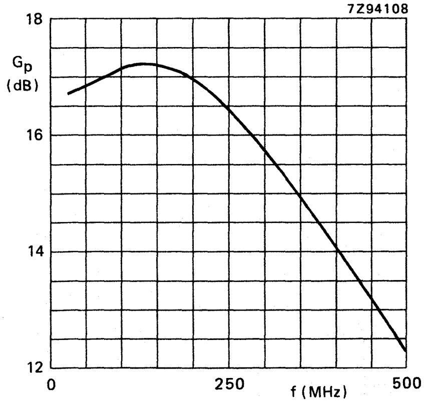

Fig. 17 Power gain versus frequency.

Conditions for Figs 15 to 17:

V_{CE} = 10 V; P_L = 500 mW; T_{amb} = 25 °C; typical values. ←

OPERATING NOTE for Figs 15 to 17:

A base-emitter resistor of 47 Ω is recommended to avoid oscillation. This resistor must be effective for r.f. only.

N-P-N H.F. WIDEBAND TRANSISTOR

N-P-N transistor in a plastic SOT-23 envelope. It is intended for a wide range of v.h.f. and u.h.f. applications in thick and thin-film circuits.

QUICK REFERENCE DATA

Collector-base voltage (open emitter; peak value)	V_{CBOM}	max.	25	V
Collector-emitter voltage (open base)	V_{CEO}	max.	15	V
Collector current (peak value)	I_{CM}	max.	50	mA
Total power dissipation up to T_{amb} = 65 °C	P_{tot}	max.	250	mW
Junction temperature	T_j	max.	175	°C
D.C. current gain I_C = 2 mA; V_{CE} = 1 V	h_{FE}		20 to 150	
Transition frequency I_C = 25 mA; V_{CE} = 5 V; f = 500 MHz	f_T	typ.	1,3	GHz
Noise figure I_C = 2 mA; V_{CE} = 5 V; R_S = 50 Ω; f = 500 MHz	F	typ.	4,5	dB

MECHANICAL DATA

Dimensions in mm

Fig. 1 SOT-23.

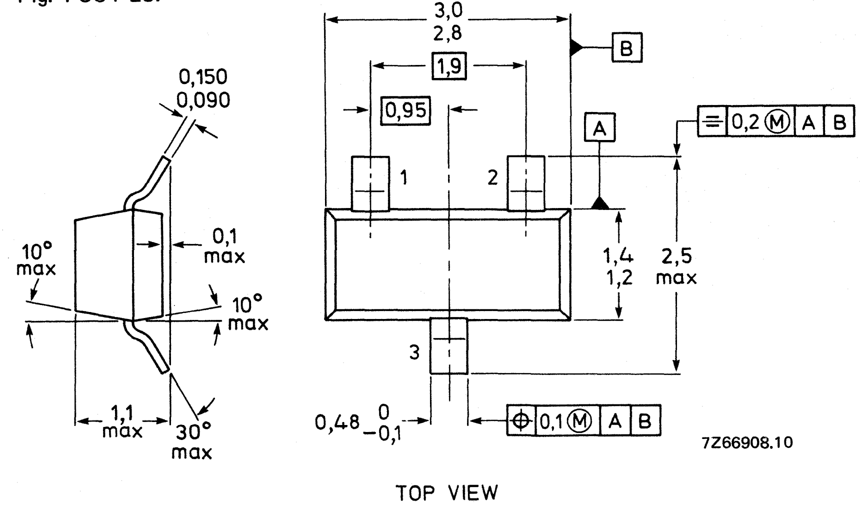

Marking code

BFS17 = E1

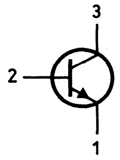

If required, the R-version (reverse pinning) is available on request.

RATINGS

Limiting values in accordance with the Absolute Maximum System (IEC 134)

Collector-base voltage (open emitter; peak value)	V_{CBOM}	max.	25	V
Collector-emitter voltage (open base) I_C = 10 mA	V_{CEO}	max.	15	V
Emitter-base voltage (open collector)	V_{EBO}	max.	2,5	V
Collector current (d.c.)	I_C	max.	25	mA
Collector current (peak value)	I_{CM}	max.	50	mA
Total power dissipation up to T_{amb} = 65 °C**	P_{tot}	max.	250	mW
Storage temperature	T_{stg}	−65 to + 175		°C
Junction temperature	T_j	max.	175	°C

THERMAL CHARACTERISTICS*

$T_j = P (R_{th\ j\text{-}t} + R_{th\ t\text{-}s} + R_{th\ s\text{-}a}) + T_{amb}$

Thermal resistance

From junction to tab	$R_{th\ j\text{-}t}$	=	60	K/W
From tab to soldering points	$R_{th\ t\text{-}s}$	=	280	K/W
From soldering points to ambient**	$R_{th\ s\text{-}a}$	=	90	K/W

CHARACTERISTICS

T_j = 25 °C unless otherwise specified

Collector cut-off current I_E = 0; V_{CB} = 10 V	I_{CBO}	max.	10	nA
I_E = 0; V_{CB} = 10 V; T_j = 100 °C	I_{CBO}	max.	10	µA
D.C. current gain I_C = 2 mA; V_{CE} = 1 V	h_{FE}	20 to 150		
I_C = 25 mA; V_{CE} = 1 V	h_{FE}	min.	20	
Transition frequency I_C = 2 mA; V_{CE} = 5 V; f = 500 MHz	f_T	typ.	1,0	GHz
I_C = 25 mA; V_{CE} = 5 V; f = 500 MHz	f_T	typ.	1,3	GHz
Collector capacitance at f = 1 MHz I_E = I_e = 0; V_{CB} = 10 V	C_c	max.	1,5	pF

---

* See *Thermal characteristics.*

** Mounted on a ceramic substrate of 8 mm x 10 mm x 0,7 mm.

Emitter capacitance at f = 1 MHz $I_C = I_c = 0$; $V_{EB} = 0,5$ V	C_e	max.	2,0 pF
Feedback capacitance at f = 1 MHz $I_C = 1$ mA; $V_{CE} = 5$ V	C_{re}	typ.	0,65 pF
Noise figure* $I_C = 2$ mA; $V_{CE} = 5$ V; f = 500 MHz; $R_S = 50\ \Omega$	F	typ.	4,5 dB
Intermodulation distortion $I_C = 10$ mA; $V_{CE} = 6$ V; $R_L = 37,5\ \Omega$; $T_{amb} = 25\ ^oC$ $V_o = 100$ mV at $f_p = 183$ MHz $V_o = 100$ mV at $f_q = 200$ MHz measured at $f_{(2q-p)} = 217$ MHz	d_{im}	typ.	−45 dB

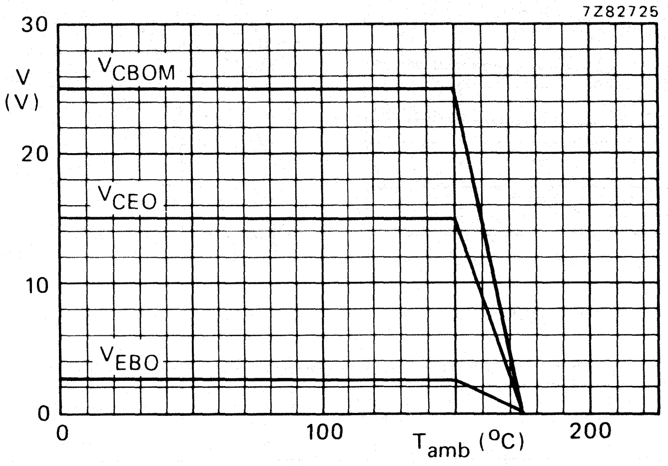

Fig. 2 Voltage derating curve.

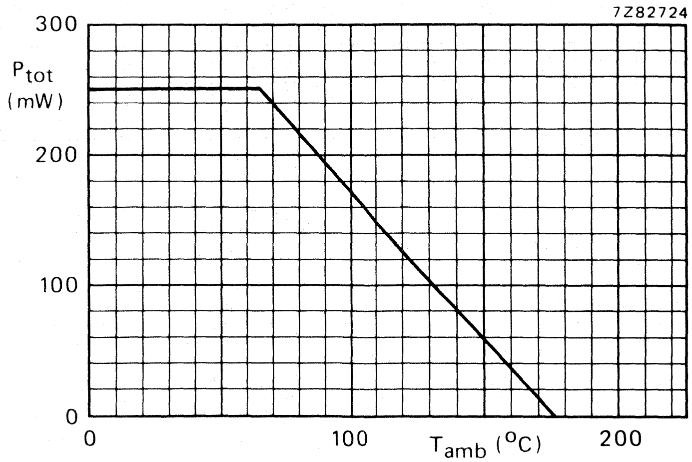

Fig. 3 Power derating curve.

---

* Crystal mounted in a BFY90 envelope.

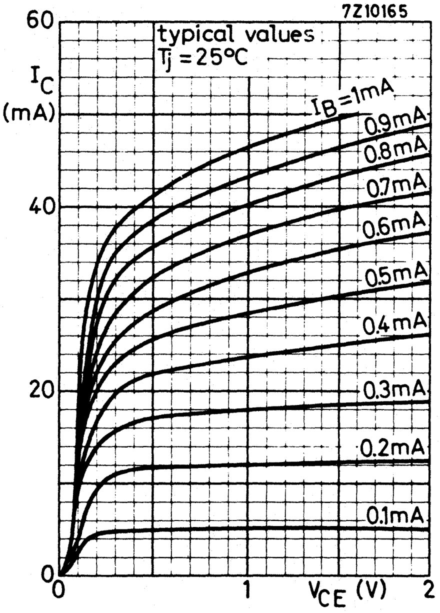

Fig. 4 $T_j = 25\ ^{o}C$; typical values.

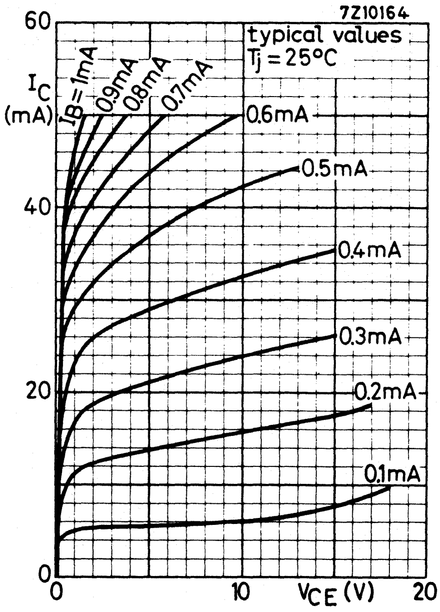

Fig. 5 $T_j = 25\ ^{o}C$; typical values.

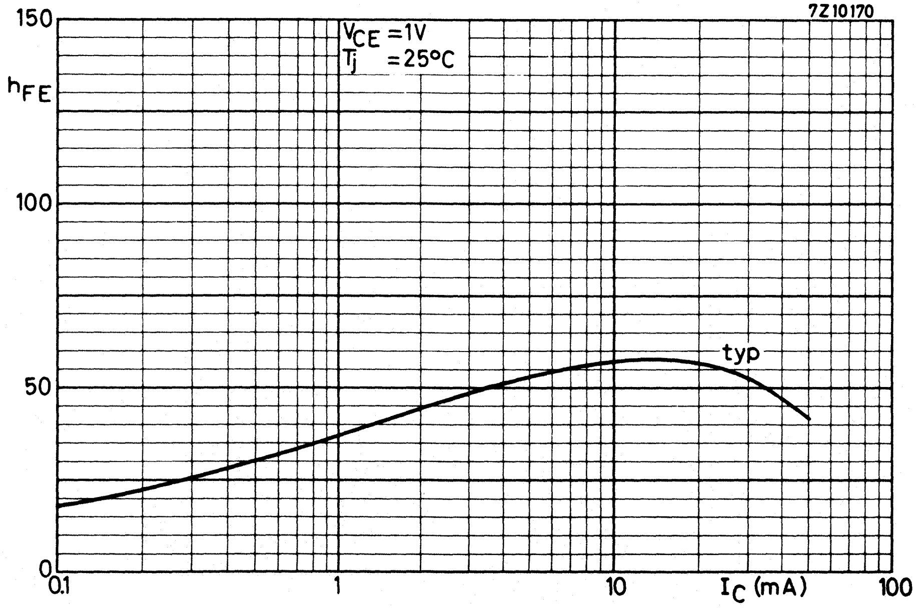

Fig. 6 $V_{CE} = 1$ V; $T_j = 25\ ^{o}C$; typical values.

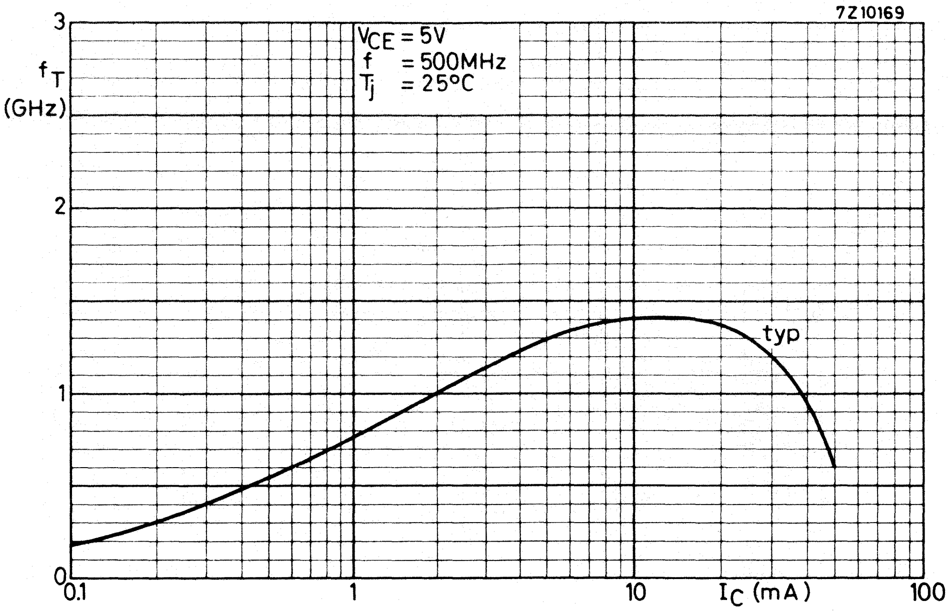

Fig. 7 V_{CE} = 5 V; f = 500 MHz; T_j = 25 °C; typical values.

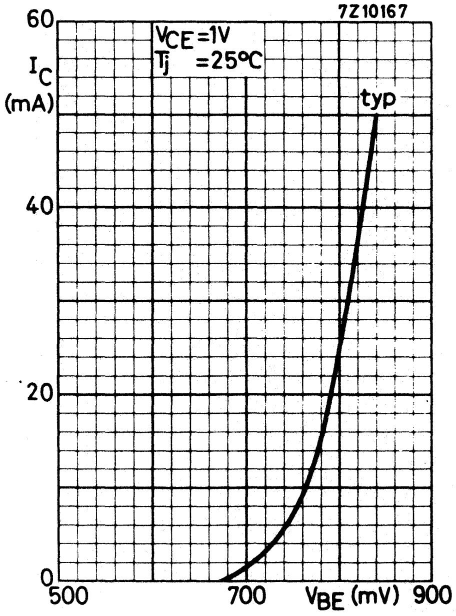

Fig. 8 V_{CE} = 1 V; T_j = 25 °C; typical values.

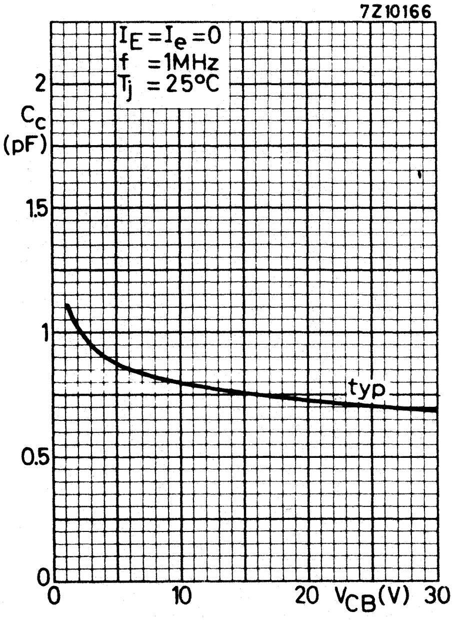

Fig. 9 I_E = I_e = 0; f = 1 MHz; T_j = 25 °C; typical values.

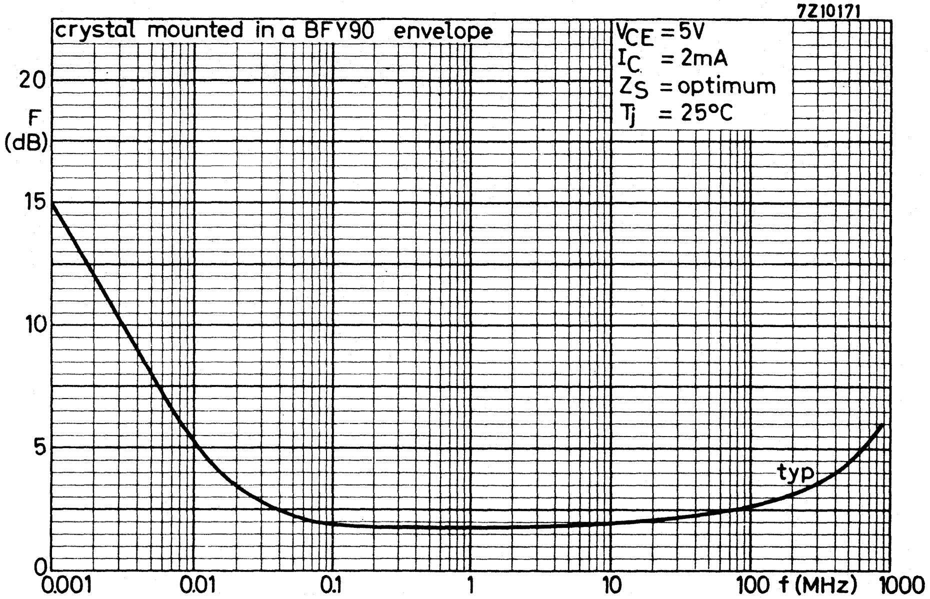

Fig. 10 V_{CE} = 5 V; I_C = 2 mA; Z_S = optimum; T_j = 25 °C; typical values.

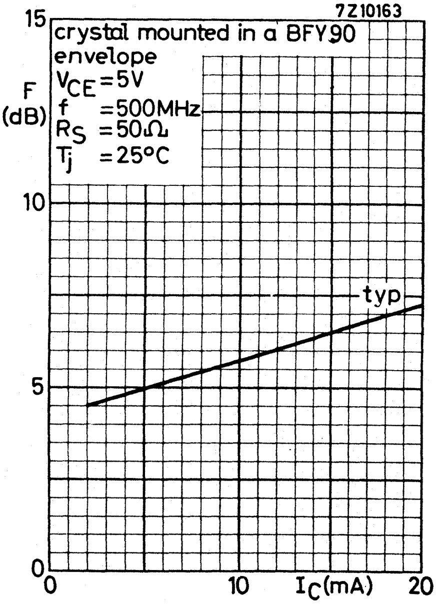

Fig. 11 V_{CE} = 5 V; f = 500 MHz; R_S = 50 Ω; T_j = 25 °C; typical values.

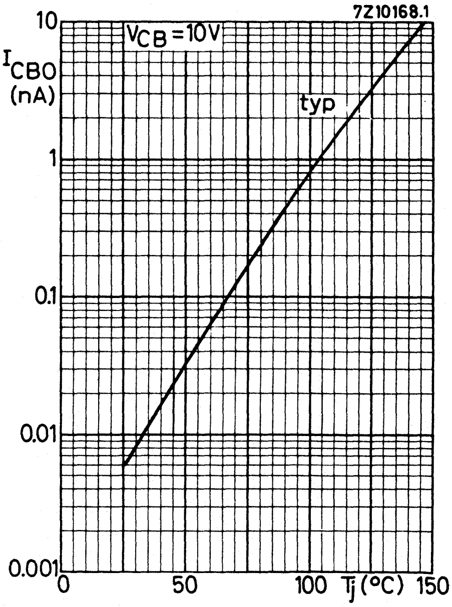

Fig. 12 V_{CB} = 10 V; typical values.

N-P-N 1 GHz WIDEBAND TRANSISTOR

N-P-N transistor in a plastic SOT-23 envelope. It is intended for a wide range of v.h.f. and u.h.f. applications in thick and thin-film circuits.

The BFS17A is the successor to the BFS17 and offers a higher power gain and an improved noise behaviour.

QUICK REFERENCE DATA

Collector-base voltage (open emitter)	V_{CBO}	max.	25	V
Collector-emitter voltage (open base)	V_{CEO}	max.	15	V
Collector current (d.c.)	I_C	max.	25	mA
Total power dissipation up to T_{amb} = 25 °C	P_{tot}	max.	300	mW
Junction temperature	T_j	max.	150	°C
D.C. current gain I_C = 2 mA; V_{CE} = 1 V	h_{FE}		20 to 150	
Transition frequency at f = 500 MHz I_C = 25 mA; V_{CE} = 5 V	f_T	typ.	2,8	GHz
Noise figure I_C = 2 mA; V_{CE} = 5 V; f = 800 MHz	F	typ.	2,5	dB
Output voltage at d_{im} = –60 dB V_{CE} = 10 V; I_C = 14 mA; Z_L = 75 Ω $f_{(p+q-r)}$ = 793,25 MHz	V_o	typ.	150	mV
Maximum unilateral power gain at f = 800 MHz V_{CE} = 10 V; I_C = 14 mA	G_{UM}	typ.	13,5	dB

MECHANICAL DATA (see Fig. 1).

If required, the R-version (reverse pinning) is available on request.

MECHANICAL DATA Dimensions in mm

Fig. 1 SOT-23.

Marking code

BFS17A = E2

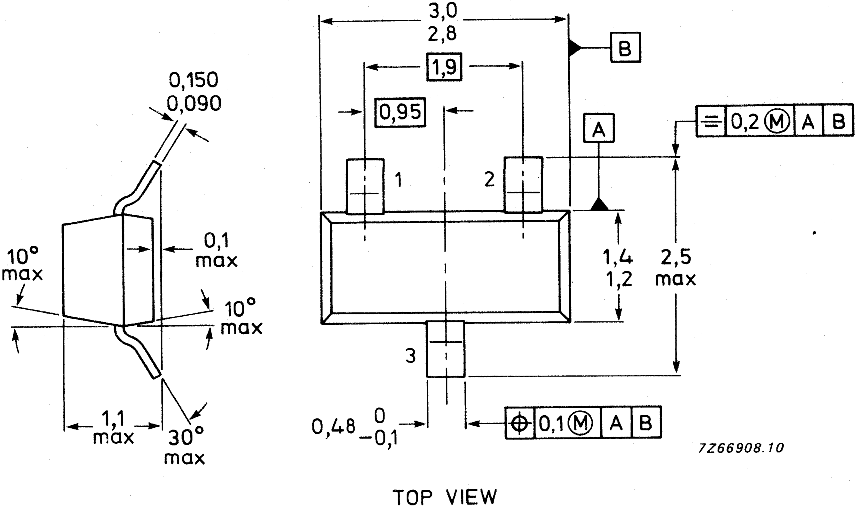

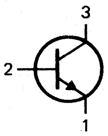

RATINGS

Limiting values in accordance with the Absolute Maximum System (IEC 134)

Collector-base voltage (open emitter)	V_{CBO}	max.	25	V
Collector-emitter voltage (open base)	V_{CEO}	max.	15	V
Emitter-base voltage (open collector)	V_{EBO}	max.	2,5	V
Collector current (d.c.)	I_C	max.	25	mA
Collector current (peak value)	I_{CM}	max.	50	mA
Total power dissipation up to T_{amb} = 25 °C*	P_{tot}	max.	300	mW
Storage temperature	T_{stg}	−65 to + 150		°C
Junction temperature	T_j	max.	150	°C

THERMAL RESISTANCE

From junction to ambient*	$R_{th\ j\text{-}a}$	=	430	K/W

---

* Mounted on a ceramic substrate of 8 mm x 10 mm x 0,7 mm.

CHARACTERISTICS

T_j = 25 °C unless otherwise specified

Collector cut-off current $I_E = 0$; $V_{CB} = 10$ V	I_{CBO}	max.	50	nA
D.C. current gain $I_C = 2$ mA; $V_{CE} = 1$ V	h_{FE}		20 to 150	
$I_C = 25$ mA; $V_{CE} = 1$ V		min.	20	
Transition frequency at f = 500 MHz $I_C = 25$ mA; $V_{CE} = 5$ V	f_T	typ.	2,8	GHz
Collector capacitance at f = 1 MHz $I_E = 0$; $V_{CB} = 10$ V	C_c	typ.	0,7	pF
Emitter capacitance at f = 1 MHz $I_C = 0$; $V_{EB} = 0,5$ V	C_e	typ.	1,25	pF
Feedback capacitance at f = 1 MHz $I_C = 0$; $V_{CE} = 5$ V	C_{re}	typ.	0,6	pF

Maximum unilateral power gain
(s_{re} assumed to be zero)

$$G_{UM} = 10 \log \frac{|s_{fe}|^2}{[1-|s_{ie}|^2]\ [1-|s_{oe}|^2]}$$

$I_C = 14$ mA; $V_{CE} = 10$ V; f = 800 MHz	G_{UM}	typ.	13,5	dB
Noise figure at f = 800 MHz $I_C = 2$ mA; $V_{CE} = 5$ V; $Z_S = 60\ \Omega$; $T_{amb} = 25$ °C	F	typ.	2,5	dB

Output voltage at $d_{im} = -60$ dB
(DIN 45004B, par. 6,3: 3-tone)

$I_C = 14$ mA; $V_{CE} = 10$ V; $Z_L = 75\ \Omega$

$V_p = V_o$; $f_p = 795,25$ MHz
$V_q = V_o - 6$ dB; $f_q = 803,25$ MHz
$V_r = V_o - 6$ dB; $f_r = 805,25$ MHz

Measured at $f_{(p+q-r)} = 793,25$ MHz	V_o	typ.	150	mV

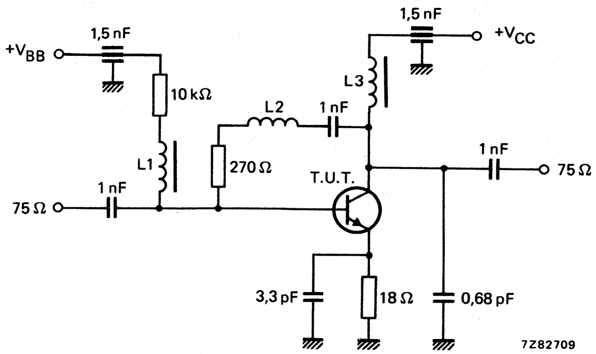

Fig. 2 Intermodulation distortion and second harmonic distortion MATV test circuit.

L1 = L3 = 5 μH Ferroxcube choke.
L2 = 3 turns Cu wire (0,4 mm), internal diameter 3 mm, winding pitch 1 mm.

s-parameters (common emitter) at V_{CE} = 5 V; typical values.

I_C mA	f MHz	s_{ie}	s_{fe}	s_{ie}	s_{oe}	G_{UM} dB
2	40	0,94/ −11,1°	6,50/173,0°	0,01/83,1°	1,00/ −4,1°	45,7
	100	0,89/ −27,6°	6,22/158,7°	0,03/74,1°	0,96/ −9,8°	34,0
	200	0,79/ −50,3°	5,38/143,2°	0,06/63,8°	0,89/−16,0°	25,7
	500	0,50/−103,1°	3,37/107,0°	0,09/47,1°	0,68/−24,3°	14,5
	800	0,43/−130,7°	2,43/ 93,1°	0,11/47,9°	0,64/−28,0°	10,9
	1000	0,43/−148,2°	2,08/ 84,5°	0,12/50,1°	0,62/−32,6°	9,3
	1200	0,41/−172,5°	1,73/ 75,8°	0,13/51,6°	0,54/−31,6°	7,1
5	40	0,84/ −19,0°	14,43/167,4°	0,01/80,2°	0,98/ −7,6°	42,5
	100	0,74/ −45,0°	12,92/147,3°	0,03/67,8°	0,89/−16,9°	32,5
	200	0,60/ −75,6°	9,60/128,6°	0,05/58,6°	0,75/−23,1°	25,3
	500	0,38/−133,5°	4,94/ 98,3°	0,07/54,6°	0,52/−23,7°	15,9
	800	0,35/−158,6°	3,25/ 86,5°	0,09/60,3°	0,52/−25,6°	12,2
	1000	0,37/−171,2°	2,71/ 79,9°	0,11/62,7°	0,50/−30,1°	10,5
	1200	0,41/+166,1°	2,31/ 73,4°	0,12/64,3°	0,43/−24,8°	8,9
10	40	0,73/ −28,7°	23,50/160,9°	0,01/76,3°	0,95/−11,7°	41,0
	100	0,59/ −64,1°	18,60/136,3°	0,02/63,7°	0,79/−22,4°	31,6
	200	0,46/ −99,8°	12,38/117,6°	0,04/58,6°	0,62/−26,1°	25,0
	500	0,35/−156,4°	5,64/ 92,5°	0,06/62,4°	0,44/−20,2°	16,5
	800	0,34/−175,1°	3,67/ 82,7°	0,09/67,9°	0,46/−22,2°	12,8
	1000	0,36/+175,8°	3,00/ 76,7°	0,11/69,3°	0,44/−26,6°	11,1
	1200	0,43/+158,2°	2,56/ 71,6°	0,13/70,6°	0,38/−19,1°	9,7
14	40	0,65/ −35,6°	28,67/156,8°	0,01/74,8°	0,93/−13,7°	40,5
	100	0,52/ −75,9°	20,73/131,2°	0,02/62,5°	0,74/−24,3°	31,2
	200	0,41/−113,1°	13,17/113,0°	0,03/60,3°	0,57/−25,8°	24,9
	500	0,35/−164,2°	5,85/ 90,3°	0,06/65,2°	0,42/−17,6°	16,8
	800	0,34/−179,4°	3,76/ 81,3°	0,09/70,6°	0,44/−20,1°	13,0
	1000	0,37/+173,9°	3,04/ 75,8°	0,11/71,7°	0,43/−24,8°	11,2
	1200	0,44/+154,6°	2,63/ 69,7°	0,13/72,4°	0,38/−17,0°	10,0
20	40	0,58/ −44,3°	33,42/152,4°	0,01/72,4°	0,90/−15,8°	39,6
	100	0,45/ −89,5°	22,57/125,6°	0,02/61,8°	0,69/−25,0°	30,9
	200	0,38/−125,9°	13,53/108,7°	0,03/62,5°	0,53/−24,2°	24,8
	500	0,35/−171,5°	5,80/ 87,8°	0,06/68,0°	0,42/−15,0°	16,7
	800	0,35/+176,2°	3,68/ 79,4°	0,09/72,5°	0,44/−18,4°	12,8
	1000	0,38/+170/1°	3,01/ 74,2°	0,11/73,5°	0,43/−23,1°	11,1
	1200	0,46/+153,2°	2,63/ 69,3°	0,12/74,1°	0,38/−15,8°	10,1

s-parameters (common emitter) at V_{CE} = 10 V; typical values.

I_C mA	f MHz	s_{ie}	s_{fe}	s_{ie}	s_{oe}	G_{UM} dB
2	40	0,94/ −10,5°	6,35/173,2°	0,01/83,2°	1,00/ −3,5°	45,5
	100	0,89/ −26,1°	6,15/159,7°	0,03/74,7°	0,97/ −8,7°	34,6
	200	0,80/ −47,7°	5,37/144,2°	0,05/64,9°	0,91/−13,8°	26,5
	500	0,51/ −98,2°	3,40/108,9°	0,08/48,8°	0,72/−21,3°	15,1
	800	0,42/−126,1°	2,45/ 94,6°	0,10/50,0°	0,69/−25,0°	11,4
	1000	0,41/−144,2°	2,09/ 85,6°	0,11/52,1°	0,66/−29,0°	9,7
	1200	0,39/−170,5°	1,76/ 77,1°	0,12/53,1°	0,59/−28,1°	7,5
5	40	0,85/ −18,0°	14,09/168,2°	0,01/81,0°	0,99/ −6,3°	44,0
	100	0,76/ −41,4°	12,61/149,1°	0,03/69,2°	0,91/−14,4°	33,3
	200	0,61/ −70,9°	9,69/130,0°	0,04/60,1°	0,79/−19,9°	26,0
	500	0,38/−126,8°	5,04/ 99,2°	0,07/54,9°	0,57/−20,6°	16,5
	800	0,33/−152,2°	3,35/ 87,9°	0,08/61,2°	0,57/−22,7°	12,7
	1000	0,35/−165,9°	2,75/ 81,0°	0,10/64,0°	0,55/−26,4°	10,9
	1200	0,39/+168,5°	2,35/ 74,1°	0,11/65,4°	0,49/−22,3°	9,3
10	40	0,76/−25,9 °	22,67/161,9°	0,01/76,6°	0,96/ −9,8°	42,1
	100	0,63/ −57,9°	18,55/138,5°	0,02/65,1°	0,83/−19,2°	32,5
	200	0,47/ −91,5°	12,47/119,0°	0,03/59,8°	0,67/−22,4°	25,6
	500	0,33/−151,1°	5,82/ 93,0°	0,06/62,2°	0,50/−17,7°	17,1
	800	0,31/−169,4°	3,78/ 83,6°	0,08/68,4°	0,51/−19,6°	13,3
	1000	0,33/−178,6°	3,10/ 77,9°	0,10/70,0°	0,50/−23,5°	11,6
	1200	0,39/+158,8°	2,65/ 71,9°	0,12/70,8°	0,45/−17,8°	10,1
14	40	0,70/ −30,8°	27,63/158,1°	0,01/74,7°	0,95/−11,6°	41,5
	100	0,55/ −67,6°	20,66/133,4°	0,02/63,8°	0,78/−20,9°	32,0
	200	0,42/−102,5°	13,42/115,4°	0,03/60,9°	0,62/−22,4°	25,5
	500	0,32/−158,3°	5,97/ 91,4°	0,06/65,1°	0,48/−15,7°	17,1
	800	0,31/−174,4°	3,88/ 81,8°	0,08/70,5°	0,50/−18,3°	13,5
	1000	0,34/+177,7°	3,14/ 76,7°	0,10/71,9°	0,49/−22,2°	11,6
	1200	0,40/+156,0°	2,71/ 70,2°	0,12/72,3°	0,44/−15,9°	10,3
20	40	0,65/ −37,4°	32,19/154,4°	0,01/73,2°	0,92/−13,4°	40,8
	100	0,49/ −76,7°	22,74/127,9°	0,02/62,7°	0,73/−21,8°	31,7
	200	0,38/−112,6°	13,78/110,5°	0,03/62,3°	0,59/−21,1°	25,3
	500	0,32/−164,7°	6,05/ 88,6°	0,06/67,4°	0,47/−13,6°	17,2
	800	0,31/−179,0°	3,84/ 80,1°	0,08/72,4°	0,50/−16,8°	13,4
	1000	0,34/+173,5°	3,14/ 75,1°	0,10/73,1°	0,49/−21,0°	11,6
	1200	0,40/+155,0°	2,69/ 69,8°	0,12/73,6°	0,44/−14,7°	10,3

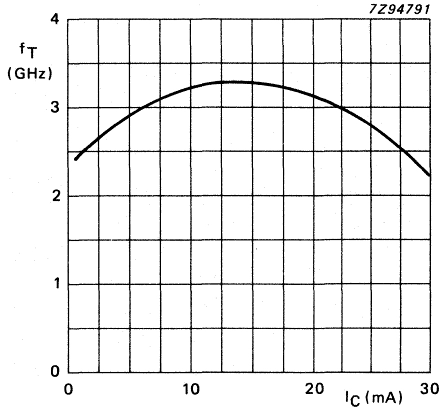

Fig. 3 $V_{CE} = 5$ V; f = 500 MHz; $T_{amb} = 25$ °C; typical values.

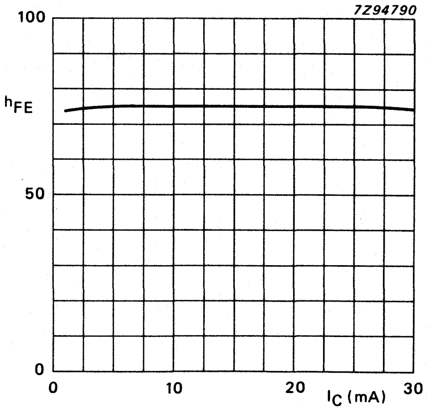

Fig. 4 $V_{CE} = 1$ V; $T_{amb} = 25$ °C; typical values.

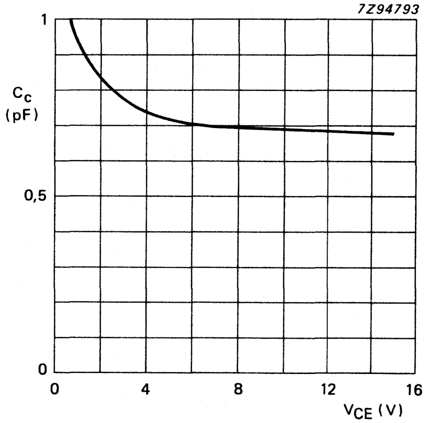

Fig. 5 $I_E = 0$; f = 1 MHz; $T_{amb} = 25$ °C; typical values.

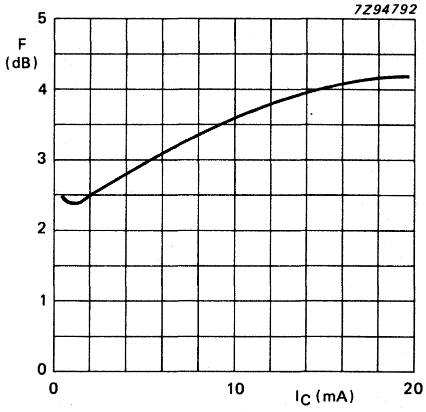

Fig. 6 $V_{CE} = 5$ V; $T_{amb} = 25$ °C; f = 800 MHz; $Z_S = 60\ \Omega$; typical values.

N-P-N H.F. WIDEBAND TRANSISTOR

N-P-N transistor in a plastic SOT-37 envelope. It is primarily intended for use in u.h.f. low power amplifiers such as in pocket phones, paging systems, etc. The transistor features low current consumption (100 μA – 1 mA); thanks to its high transition frequency, it also has excellent wideband properties and low noise up to high frequencies.

QUICK REFERENCE DATA

Collector-base voltage (open emitter)	V_{CBO}	max.	8	V
Collector-emitter voltage (open base)	V_{CEO}	max.	5	V
Collector current (d.c.)	I_C	max.	2,5	mA
Total power dissipation up to T_{amb} = 135 °C	P_{tot}	max.	30	mW
Junction temperature	T_j	max.	150	°C
Transition frequency at f = 500 MHz I_C = 1 mA; V_{CE} = 1 V	f_T	typ.	2,3	GHz
Feedback capacitance at f = 1 MHz I_C = 1 mA; V_{CE} = 1 V	C_{re}	max.	0,4	pF
Noise figure at optimum source impedance I_C = 1 mA; V_{CE} = 1 V; f = 500 MHz	F	typ.	3,8	dB
Max. unilateral power gain I_C = 1 mA; V_{CE} = 1 V; f = 500 MHz	G_{UM}	typ.	17	dB

MECHANICAL DATA

Dimensions in mm

Fig. 1 SOT-37.

Connections

1. Base
2. Emitter
3. Collector

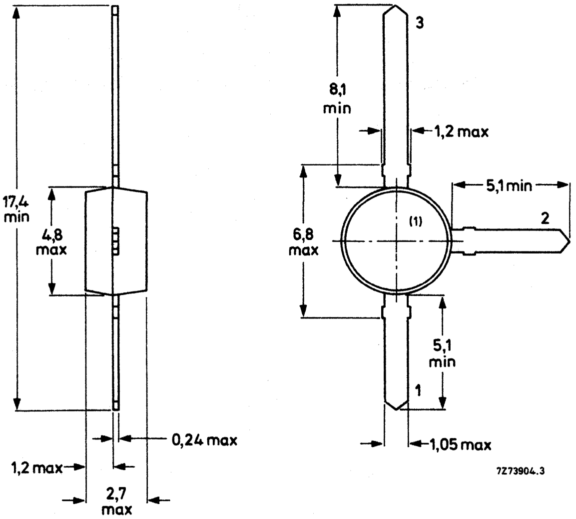

(1) = type number marking.

RATINGS

Limiting values in accordance with the Absolute Maximum System (IEC 134)

Collector-base voltage (open emitter)	V_{CBO}	max.	8	V
Collector-emitter voltage (open base)	V_{CEO}	max.	5	V
Emitter-base voltage (open collector)	V_{EBO}	max.	2	V
Collector current (d.c.)	I_C	max.	2,5	mA
Collector current (peak value; $f > 1$ MHz)	I_{CM}	max.	5,0	mA
Total power dissipation up to T_{amb} = 135 °C	P_{tot}	max.	30	mW
Storage temperature	T_{stg}	−65 to + 150		°C
Junction temperature	T_j	max.	150	°C

THERMAL RESISTANCE

From junction to ambient in free air mounted on a glass-fibre print of 40 mm x 25 mm x 1 mm (see Fig. 2)	$R_{th\ j\text{-}a}$	=	500	K/W

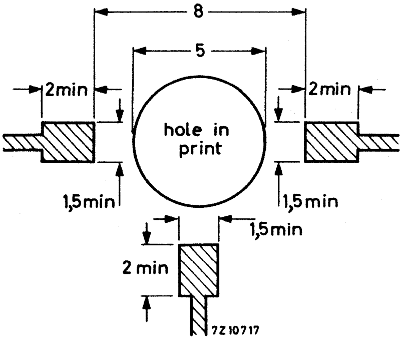

Fig. 2 Requirements for glass-fibre print. Dimensions in mm.

CHARACTERISTICS

$T_j = 25\ ^{o}C$ unless otherwise specified

Parameter	Symbol		Value	Unit
Collector cut-off current $I_E = 0; V_{CB} = 5\ V$	I_{CBO}	max.	50	nA
D.C. current gain $I_C = 10\ \mu A; V_{CE} = 1\ V$	h_{FE}	min. typ.	20 30	
$I_C = 1\ mA; V_{CE} = 1\ V$	h_{FE}	min. typ.	20 40	
Saturation voltages $I_C = 10\ \mu A; I_B = 1\ \mu A$	V_{CEsat} V_{BEsat}	max. max.	200 750	mV mV
$I_C = 1\ mA; I_B = 0{,}1\ mA$	V_{CEsat} V_{BEsat}	max. max.	175 900	mV mV
Transition frequency at f = 500 MHz $I_C = 1\ mA; V_{CE} = 1\ V$	f_T	min. typ.	1,2 2,3	GHz GHz
Collector capacitance at f = 1 MHz $I_E = I_e = 0; V_{CB} = 0{,}5\ V$	C_c	max.	0,55	pF
Emitter capacitance at f = 1 MHz $I_C = I_c = 0; V_{EB} = 0$	C_e	max.	0,45	pF
Feedback capacitance at f = 1 MHz $I_C = 1\ mA; V_{CE} = 1\ V; T_{amb} = 25\ ^{o}C$	C_{re}	max.	0,4	pF
Noise figure at optimum source impedance $I_C = 0{,}1\ mA; V_{CE} = 1\ V; f = 500\ MHz; T_{amb} = 25\ ^{o}C$	F	typ.	5,5	dB
$I_C = 1\ mA; V_{CE} = 1\ V; f = 500\ MHz; T_{amb} = 25\ ^{o}C$	F	typ.	3,8	dB
Max. unilateral power gain (s_{re} assumed to be zero) $G_{UM} = 10 \log \frac{\lvert s_{fe}\rvert^2}{(1-\lvert s_{ie}\rvert^2)(1-\lvert s_{oe}\rvert^2)}$				
$I_C = 1\ mA; V_{CE} = 1\ V; f = 200\ MHz; T_{amb} = 25\ ^{o}C$	G_{UM}	typ.	24	dB
$I_C = 1\ mA; V_{CE} = 1\ V; f = 500\ MHz; T_{amb} = 25\ ^{o}C$	G_{UM}	typ.	17	dB
$I_C = 1\ mA; V_{CE} = 1\ V; f = 800\ MHz; T_{amb} = 25\ ^{o}C$	G_{UM}	typ.	11	dB

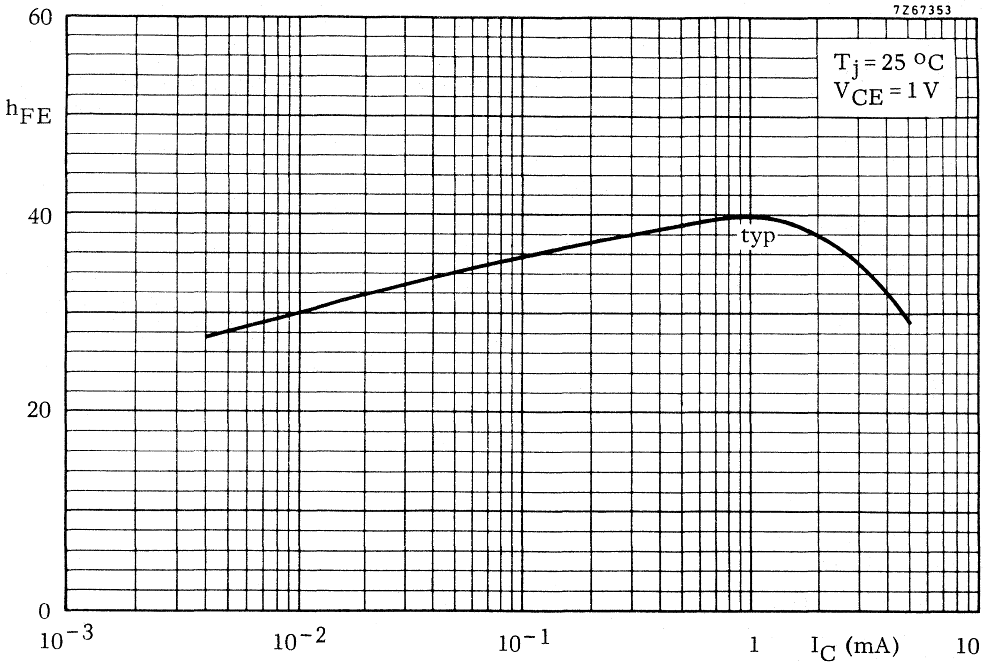

Fig. 3 $V_{CE} = 1$ V; $T_j = 25$ °C; typical values.

Fig. 4 $V_{CE} = 1$ V; f = 500 MHz; $T_j = 25$ °C; typical values.

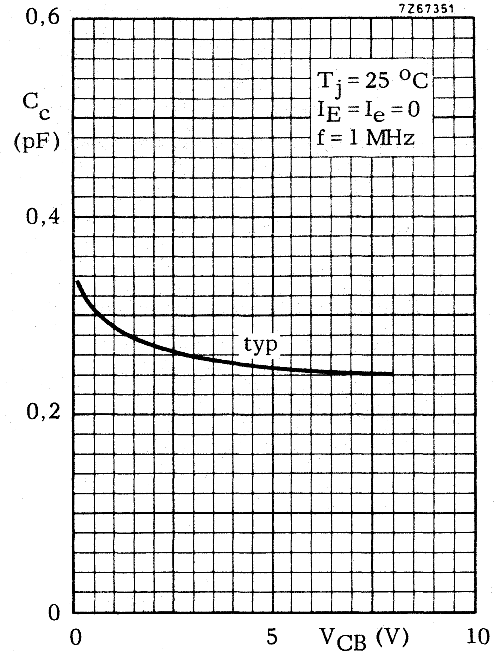

Fig. 5 $I_E = I_e = 0$; f = 1 MHz; $T_j = 25\ ^oC$; typical values.

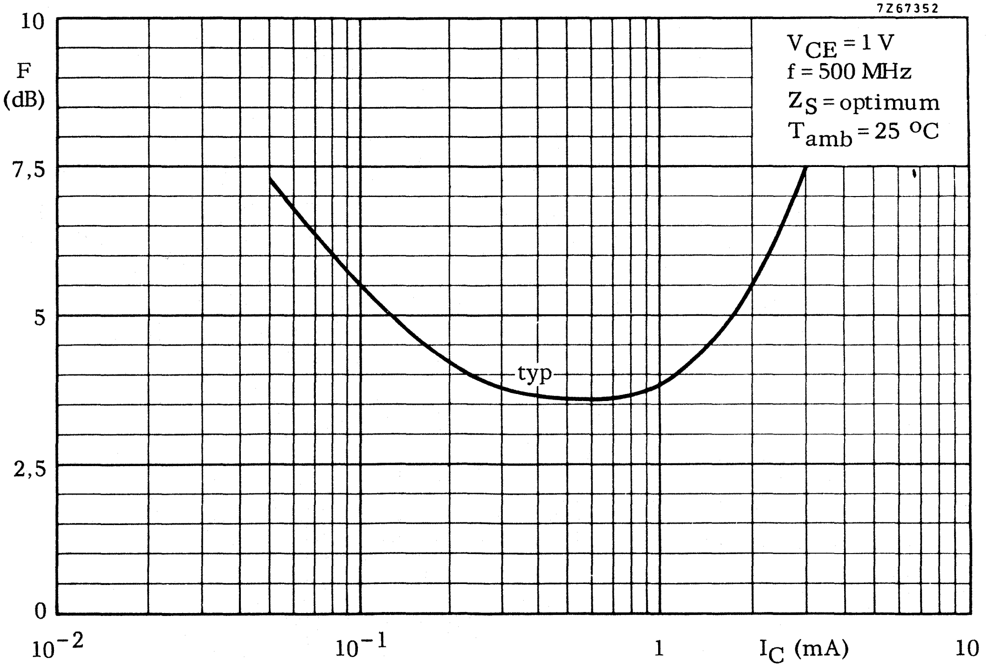

Fig. 6 $V_{CE} = 1$ V; f = 500 MHz; Z_S = opt.; $T_{amb} = 25\ ^oC$; typical values.

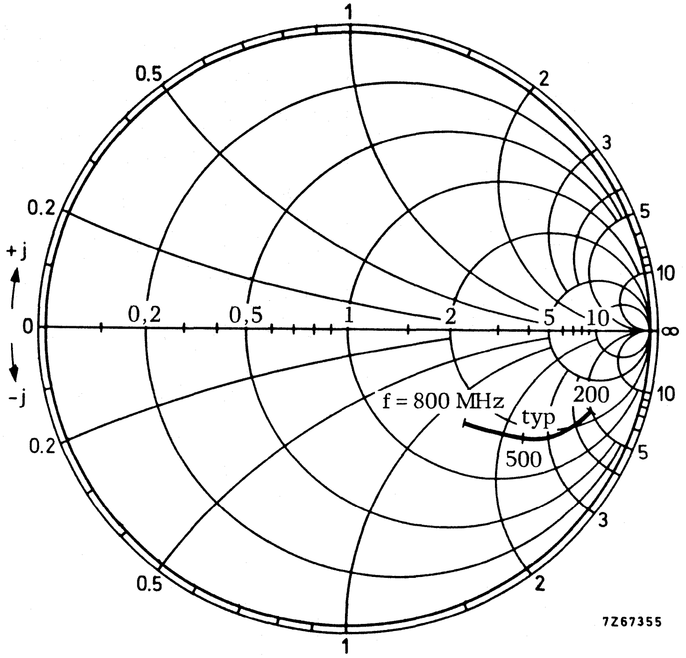

Fig. 7 V_{CE} = 1 V; I_C = 1 mA; T_{amb} = 25 °C; typical values.

Input impedance derived from input reflection coefficient s_{ie} coordinates in ohm x 50

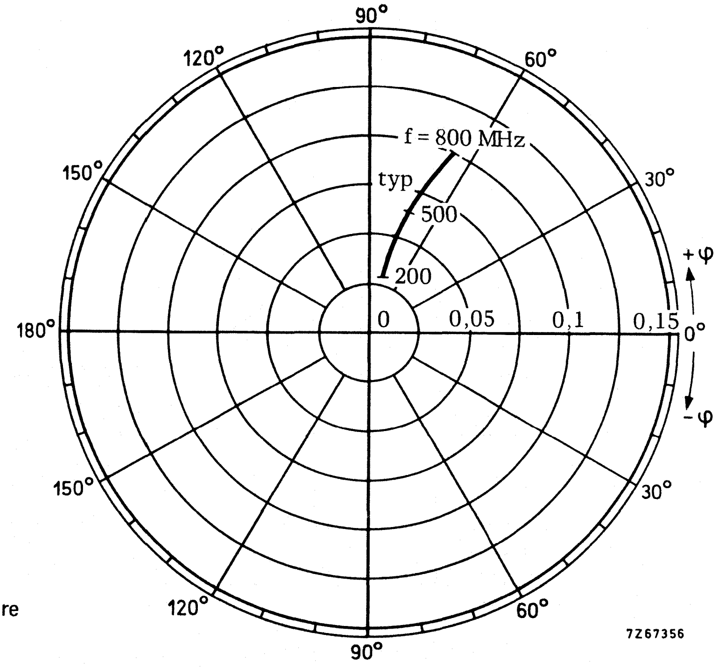

Fig. 8 V_{CE} = 1 V; I_C = 1 mA; T_{amb} = 25 °C; typical values.

Reverse transmission coefficient s_{re}

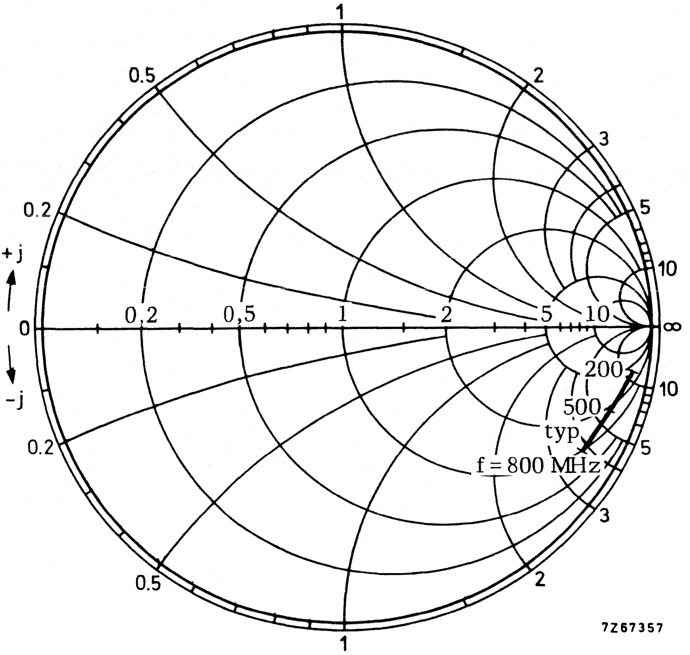

Fig. 9 V_{CE} = 1 V; I_C = 1 mA; T_{amb} = 25 °C; typical values.

Output impedance derived from output reflection coefficient s_{oe} coordinates in ohm x 50

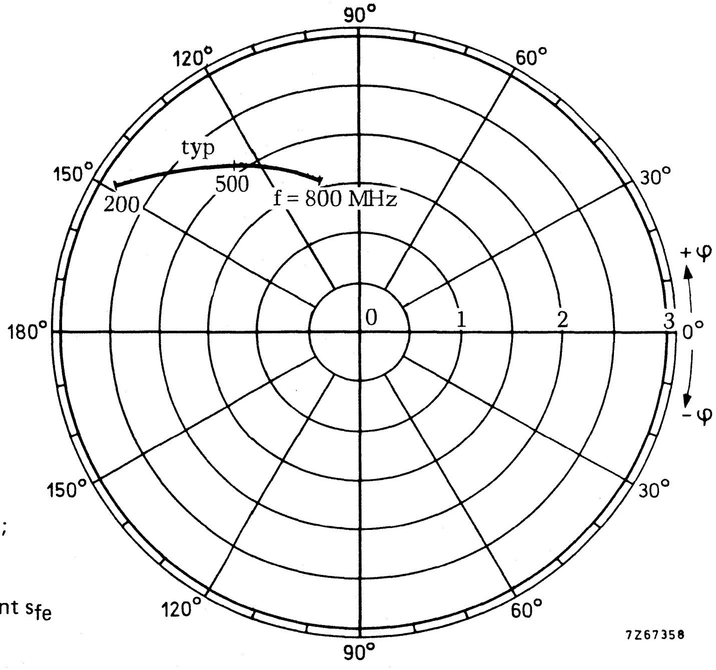

Fig. 10 V_{CE} = 1 V; I_C = 1 mA; T_{amb} = 25 °C; typical values.

Forward transmission coefficient s_{fe}

N-P-N H.F. WIDEBAND TRANSISTOR

N-P-N transistor in a plastic SOT-23 envelope, primarily intended for use in u.h.f. low power amplifiers in thick and thin-film circuits, such as in pocket phones, paging systems, etc. The transistor features low current consumption (100 μA – 1 mA); thanks to its high transition frequency, it also has excellent wideband properties and low noise up to high frequencies.

QUICK REFERENCE DATA

Collector-base voltage (open emitter)	V_{CBO}	max.	8	V
Collector-emitter voltage (open base)	V_{CEO}	max.	5	V
Collector current (d.c.)	I_C	max.	6,5	mA
Total power dissipation up to T_{amb} = 125 °C	P_{tot}	max.	50	mW
Junction temperature	T_j	max.	150	°C
Transition frequency at f = 500 MHz I_C = 1 mA; V_{CE} = 1 V	f_T	typ.	2,3	GHz
Feedback capacitance at f = 1 MHz I_C = 1 mA; V_{CE} = 1 V	C_{re}	max.	0,45	pF
Noise figure at optimum source impedance I_C = 1 mA; V_{CE} = 1 V; f = 500 MHz	F	typ.	3,8	dB
Max. unilateral power gain I_C = 1 mA; V_{CE} = 1 V; f = 500 MHz	G_{UM}	typ.	18	dB

MECHANICAL DATA

Dimensions in mm

Fig. 1 SOT-23.

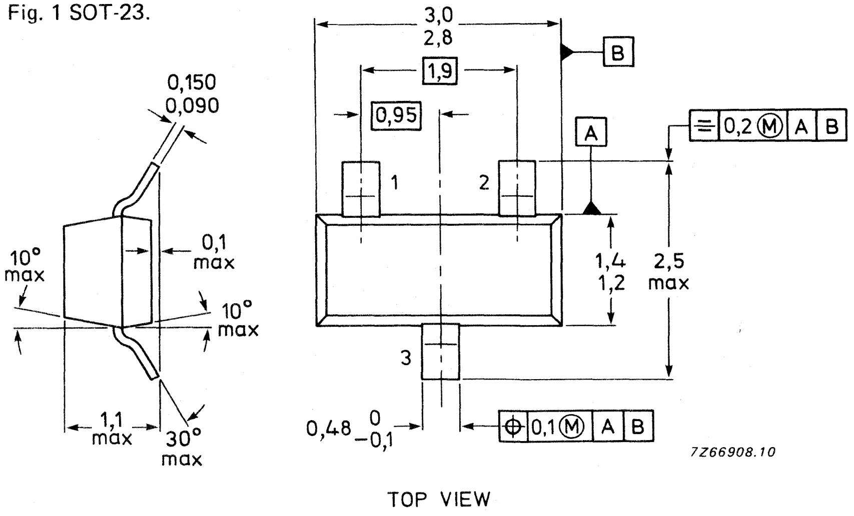

Marking code

BFT25 = V1

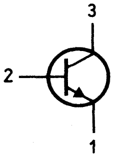

If required, the R-version (reverse pinning) is available on request.

RATINGS

Limiting values in accordance with the Absolute Maximum System (IEC 134)

Collector-base voltage (open emitter)	V_{CBO}	max.	8	V
Collector-emitter voltage (open base)	V_{CEO}	max.	5	V
Emitter-base voltage (open collector)	V_{EBO}	max.	2	V
Collector current (d.c.)	I_C	max.	6,5	mA
Collector current (peak value; $f > 1$ MHz)	I_{CM}	max.	10	mA
Total power dissipation up to T_{amb} = 125 °C**	P_{tot}	max.	50	mW
Storage temperature	T_{stg}	−65 to + 150		°C
Junction temperature	T_j	max.	150	°C

THERMAL CHARACTERISTICS*

$T_j = Px\,(R_{th\,j\text{-}t} + R_{th\,t\text{-}s} + R_{th\,s\text{-}a}) + T_{amb}$

Thermal resistance

From junction to tab	$R_{th\,j\text{-}t}$	=	60	K/W
From tab to soldering points	$R_{th\,t\text{-}s}$	=	280	K/W
From soldering points to ambient**	$R_{th\,s\text{-}a}$	=	90	K/W

CHARACTERISTICS

T_j = 25 °C unless otherwise specified

Collector cut-off current $I_E = 0$; $V_{CB} = 5$ V	I_{CBO}	max.	50	nA
D.C. current gain $I_C = 10\ \mu A$; $V_{CE} = 1$ V	h_{FE}	min. typ.	20 30	
$I_C = 1$ mA; $V_{CE} = 1$ V	h_{FE}	min. typ.	20 40	
Saturation voltages $I_C = 10\ \mu A$; $I_B = 1\ \mu A$	V_{CEsat} V_{BEsat}	max. max.	200 750	mV mV
$I_C = 1$ mA; $I_B = 0{,}1$ mA	V_{CEsat} V_{BEsat}	max. max.	175 900	mV mV
Transition frequency at f = 500 MHz $I_C = 1$ mA; $V_{CE} = 1$ V	f_T	min. typ.	1,2 2,3	GHz GHz

---

* See *Thermal characteristics.*

** Mounted on a ceramic substrate of 8 mm x 10 mm x 0,7 mm.

Collector capacitance at f = 1 MHz $I_E = I_e = 0$; $V_{CB} = 0,5$ V	C_c	max.	0,6 pF
Emitter capacitance at f = 1 MHz $I_C = I_c = 0$; $V_{EB} = 0$	C_e	max.	0,5 pF
Feedback capacitance at f = 1 MHz $I_C = 1$ mA; $V_{CE} = 1$ V; $T_{amb} = 25$ °C	C_{re}	max.	0,45 pF
Noise figure at optimum source impedance $I_C = 0,1$ mA; $V_{CE} = 1$ V; f = 500 MHz; $T_{amb} = 25$ °C	F	typ.	5,5 dB
$I_C = 1$ mA; $V_{CE} = 1$ V; f = 500 MHz; $T_{amb} = 25$ °C	F	typ.	3,8 dB

Maximum unilateral power gain (s_{re} assumed to be zero)

$$G_{UM} \text{ (in dB)} = 10 \log \frac{|s_{fe}|^2}{(1 - |s_{ie}|^2)(1 - |s_{oe}|^2)}$$

$I_C = 1$ mA; $V_{CE} = 1$ V; f = 200 MHz; $T_{amb} = 25$ °C	G_{UM}	typ.	25,0 dB
$I_C = 1$ mA; $V_{CE} = 1$ V; f = 500 MHz; $T_{amb} = 25$ °C	G_{UM}	typ.	18,0 dB
$I_C = 1$ mA; $V_{CE} = 1$ V; f = 800 MHz; $T_{amb} = 25$ °C	G_{UM}	typ.	12,0 dB

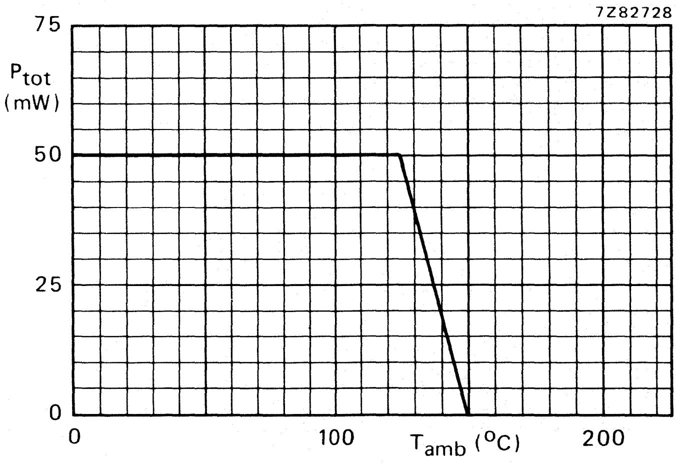

Fig. 2 Power derating curve.

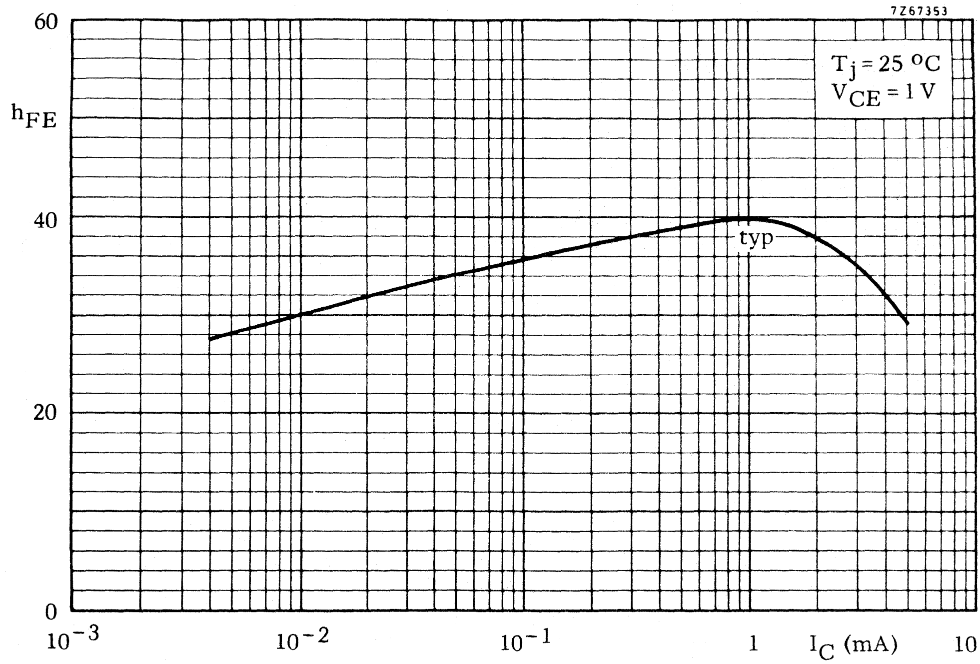

Fig. 3 $V_{CE} = 1$ V; $T_j = 25$ °C; typical values.

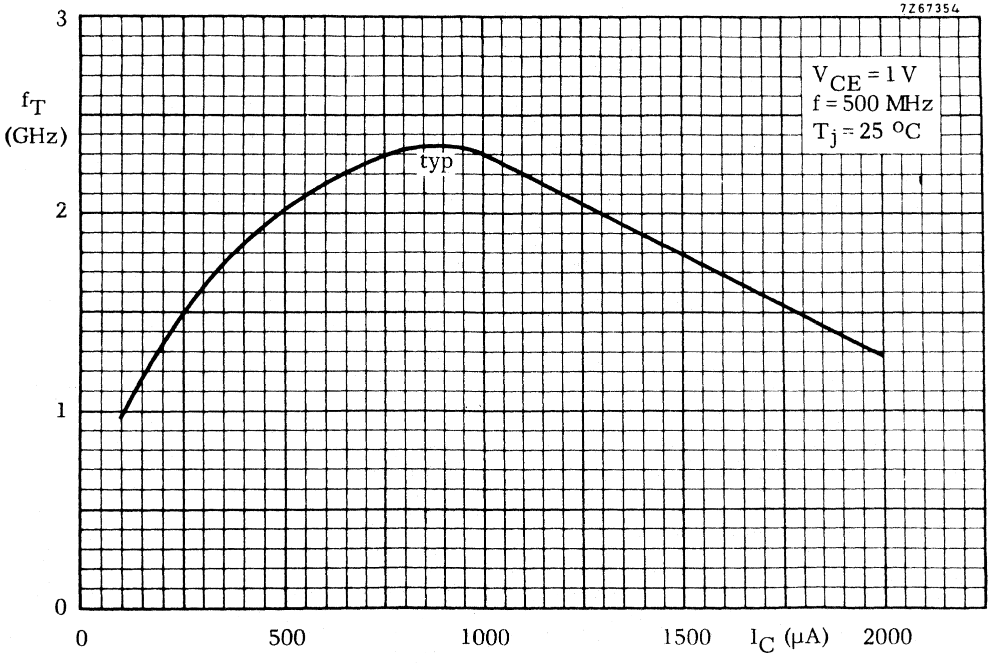

Fig. 4 $V_{CE} = 1$ V; f = 500 MHz; $T_j = 25$ °C; typical values.

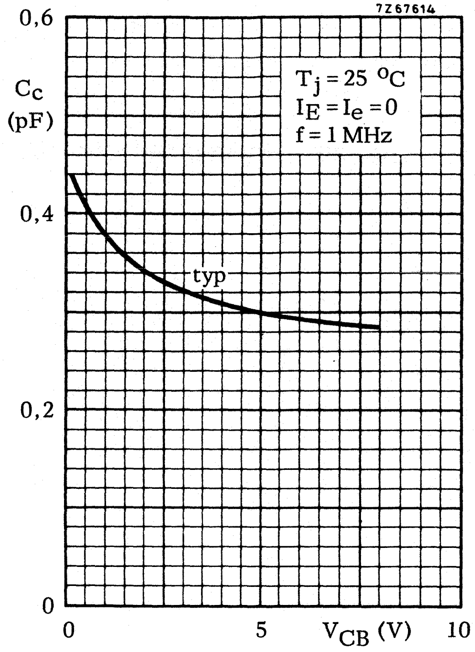

Fig. 5 $I_E = I_e = 0$; f = 1 MHz; T_j = 25 °C; typical values.

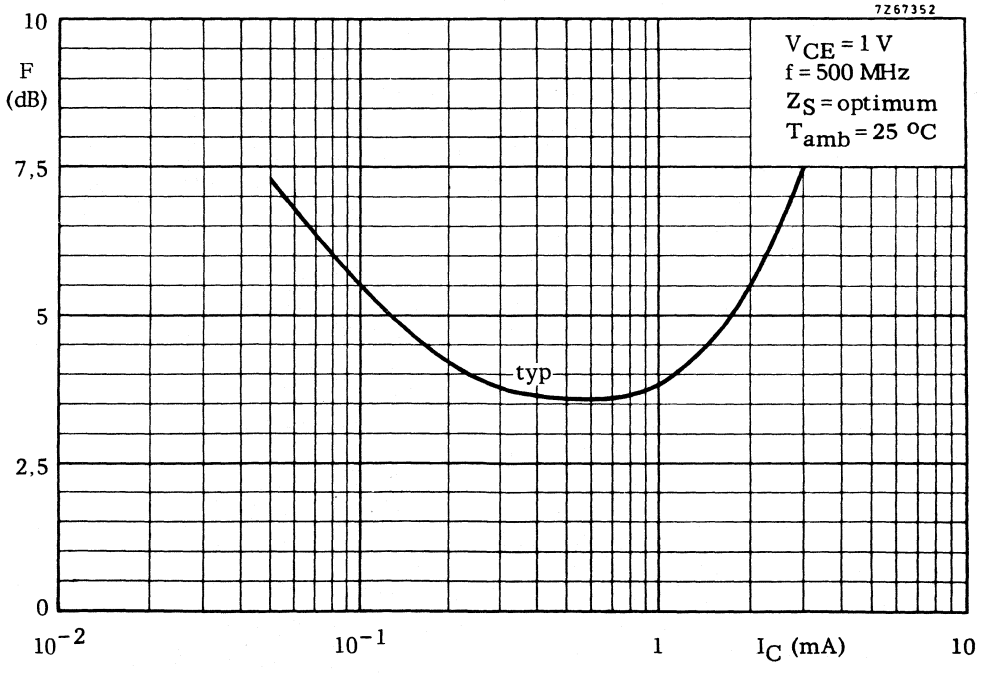

Fig. 6 V_{CE} = 1 V; f = 500 MHz; Z_S = opt.; T_{amb} = 25 °C; typical values.

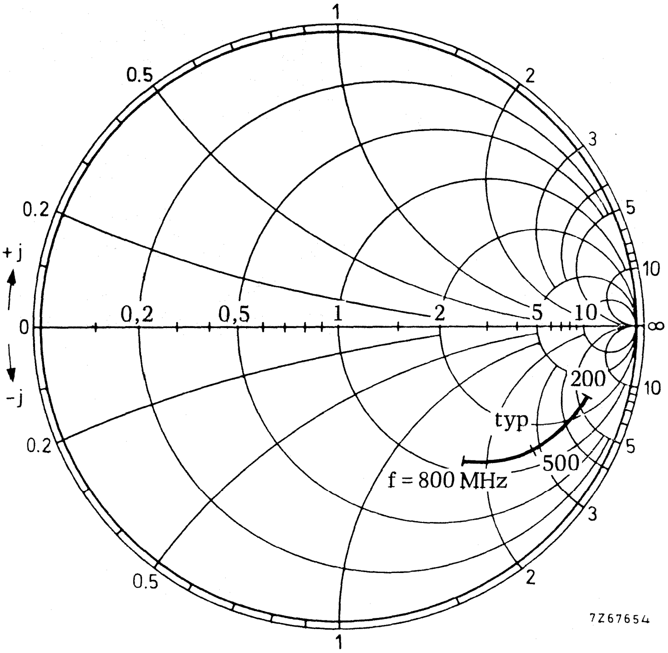

Fig. 7 V_{CE} = 1 V; I_C = 1 mA; T_{amb} = 25 °C; typical values.

Input impedance derived from input reflection coefficient s_{ie} coordinates in ohm x 50

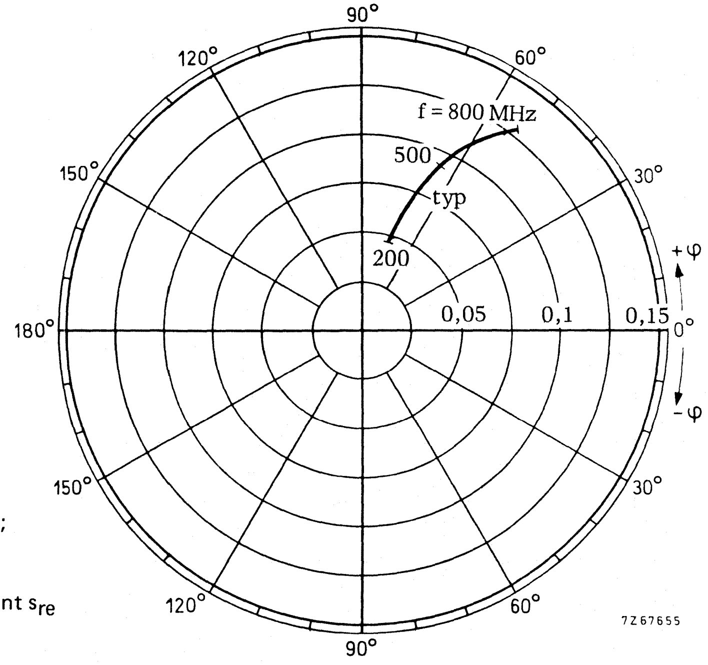

Fig. 8 V_{CE} = 1 V; I_C = 1 mA; T_{amb} = 25 °C; typical values.

Reverse transmission coefficient s_{re}

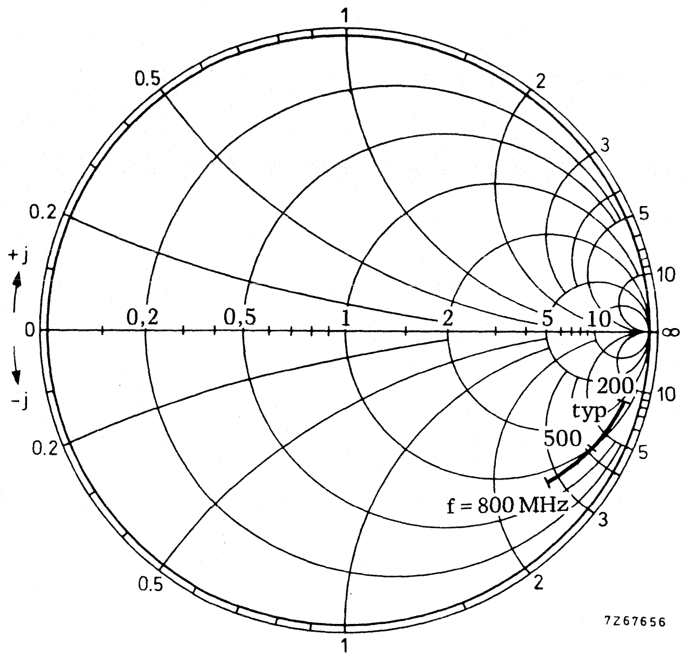

Fig. 9 V_{CE} = 1 V; I_C = 1 mA; T_{amb} = 25 °C; typical values.

Output impedance derived from output reflection coefficient s_{oe} coordinates in ohm x 50

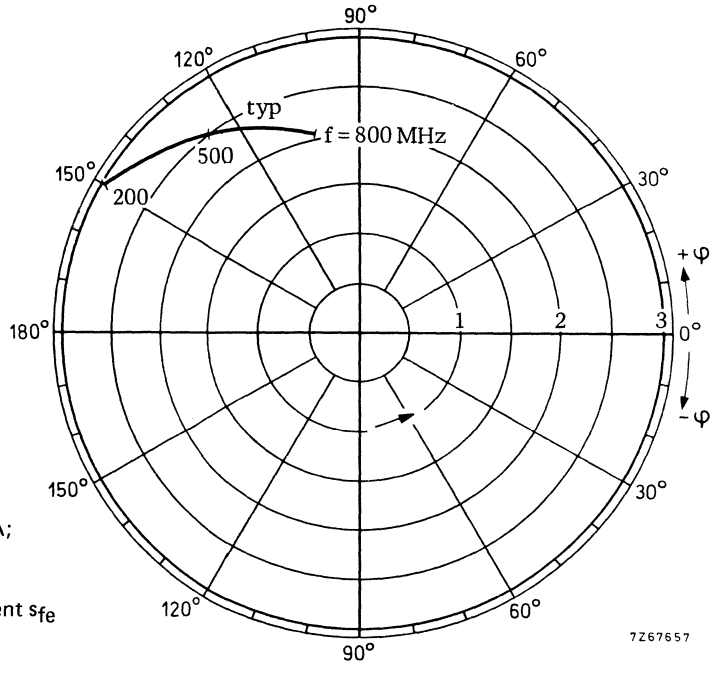

Fig. 10 V_{CE} = 1 V; I_C = 1 mA; T_{amb} = 25 °C; typical values.

Forward transmission coefficient s_{fe}

P-N-P 1 GHz WIDEBAND TRANSISTOR

P-N-P transistor in a plastic SOT-23 envelope. It is primarily intended for use in u.h.f. and microwave amplifiers in thick and thin-film circuits, such as in aerial amplifiers, radar systems, oscilloscopes, spectrum analyses, etc.

The transistor features low intermodulation distortion and high power gain; thanks to its very high transition frequency, it also has excellent wideband properties and low noise up to high frequencies.

N-P-N complements are BFR92 and BFR92A.

QUICK REFERENCE DATA

Collector-base voltage (open emitter)	$-V_{CBO}$	max.	20	V
Collector-emitter voltage (open base)	$-V_{CEO}$	max.	15	V
Collector current (d.c.)	$-I_C$	max.	25	mA
Total power dissipation up to T_{amb} = 60 °C	P_{tot}	max.	200	mW
Junction temperature	T_j	max.	150	°C
Transition frequency at f = 500 MHz $-I_C$ = 14 mA; $-V_{CE}$ = 10 V	f_T	typ.	5,0	GHz
Feedback capacitance at f = 1 MHz $-I_C$ = 2 mA; $-V_{CE}$ = 10 V	C_{re}	typ.	0,7	pF
Noise figure at optimum source impedance $-I_C$ = 2 mA; $-V_{CE}$ = 10 V; f = 500 MHz	F	typ.	2,7	dB
Max. unilateral power gain $-I_C$ = 14 mA; $-V_{CE}$ = 10 V; f = 500 MHz	G_{UM}	typ.	18,0	dB
Output voltage at d_{im} = −60 dB $-I_C$ = 14 mA; $-V_{CE}$ = 10 V; R_L = 75 Ω $f_{(p+q-r)}$ = 493,25 MHz	V_o	typ.	150	mV

MECHANICAL DATA

Dimensions in mm

Marking code

Fig. 1 SOT-23.

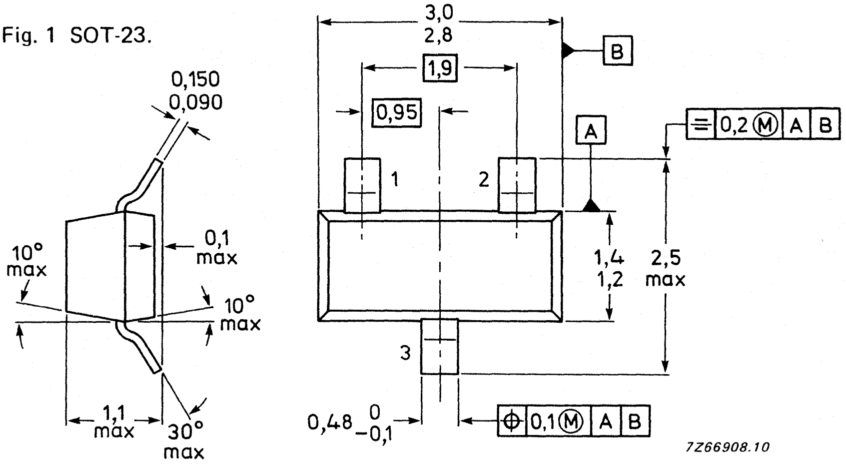

TOP VIEW

BFT92 = W1

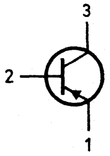

If required, the R-version (reverse pinning) is available on request.

RATINGS

Limiting values in accordance with the Absolute Maximum System (IEC 134)

Collector-base voltage (open emitter)	$-V_{CBO}$	max.	20	V
Collector-emitter voltage (open base)	$-V_{CEO}$	max.	15	V
Emitter-base voltage (open collector)	$-V_{EBO}$	max.	2	V
Collector current (d.c.)	$-I_C$	max.	25	mA
Collector current (peak value; f > 1 MHz)	$-I_{CM}$	max.	35	mA
Total power dissipation up to T_{amb} = 60 °C **	P_{tot}	max.	200	mW
Storage temperature	T_{stg}		−65 to + 150	°C
Junction temperature	T_j	max.	150	°C

THERMAL CHARACTERISTICS *

$$T_j = P\,(R_{th\ j\text{-}t} + R_{th\ t\text{-}s} + R_{th\ s\text{-}a}) + T_{amb}$$

Thermal resistance

From junction to tab	$R_{th\ j\text{-}t}$	=	60	K/W
From tab to soldering points	$R_{th\ t\text{-}s}$	=	280	K/W
From soldering points to ambient **	$R_{th\ s\text{-}a}$	=	90	K/W

---

* See *Thermal characteristics.*

** Mounted on a ceramic substrate of 8 mm x 10 mm x 0,7 mm.

CHARACTERISTICS

T_j = 25 °C unless otherwise specified

Collector cut-off current $I_E = 0; -V_{CB} = 10$ V	$-I_{CBO}$	max.	50	nA
D.C. current gain $-I_C = 14$ mA; $-V_{CE} = 10$ V	h_{FE}	min. typ.	20 50	
Transition frequency at f = 500 MHz $-I_C = 14$ mA; $-V_{CE} = 10$ V	f_T	typ.	5,0	GHz
Collector capacitance at f = 1 MHz $I_E = I_e = 0; -V_{CB} = 10$ V	C_c	typ.	0,75	pF
Emitter capacitance at f = 1 MHz $I_C = I_c = 0; -V_{EB} = 0,5$ V	C_e	typ.	0,8	pF

T_{amb} = 25 °C

Feedback capacitance at f = 1 MHz $-I_C = 2$ mA; $-V_{CE} = 10$ V	C_{re}	typ.	0,7	pF
Noise figure at optimum source impedance * $-I_C = 2$ mA; $-V_{CE} = 10$ V; f = 500 MHz	F	typ.	2,7	dB

Max. unilateral power gain (s_{re} assumed to be zero)

$$G_{UM} = 10 \log \frac{|s_{fe}|^2}{(1 - |s_{ie}|^2)(1 - |s_{oe}|^2)}$$

$-I_C = 14$ mA; $-V_{CE} = 10$ V; f = 500 MHz	G_{UM}	typ.	18,0	dB
Output voltage at $d_{im} = -60$ dB (see Fig. 2) (DIN 45004B, par. 6.3.: 3-tone) $-I_C = 14$ mA; $-V_{CE} = 10$ V; $R_L = 75\ \Omega$ $V_p = V_o$ at $d_{im} = -60$ dB; f_p = 495,25 MHz $V_q = V_o - 6$ dB ; f_q = 503,25 MHz $R_r = V_o - 6$ dB ; f_r = 505,25 MHz measured at $f_{(p+q-r)}$ = 493,25 MHz	V_o	typ.	150	mV

---

* Crystal mounted in SOT-37 envelope.

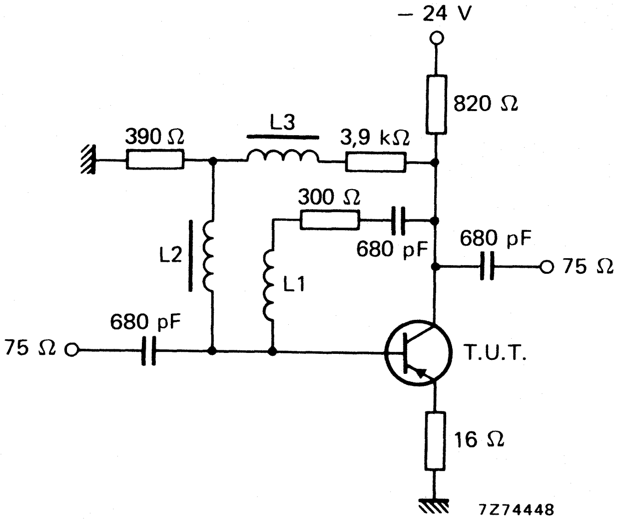

Fig. 2 Intermodulation test circuit.

L1 = 4 turns Cu wire (0,35 mm); winding pitch 1 mm; int. dia. 4 mm.
L2 = L3 = 5 μH (catalogue number: 3122 108 20150).

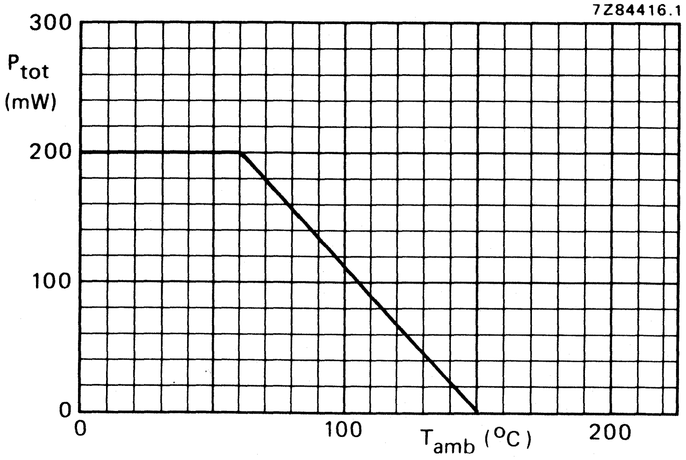

Fig. 3 Power derating curve.

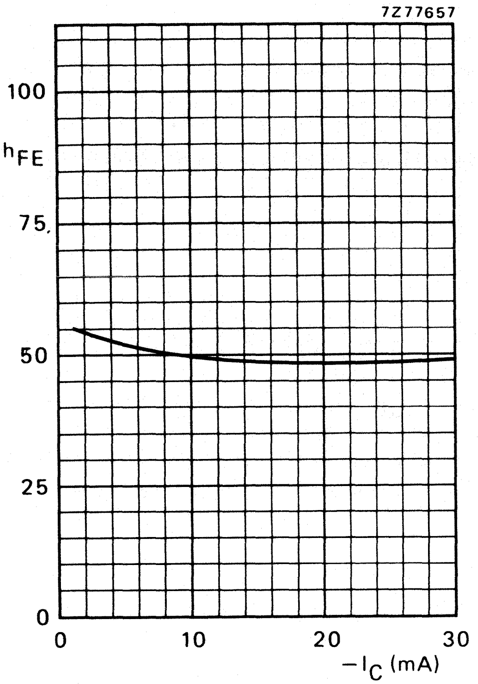

Fig. 4 $-V_{CE}$ = 10 V; T_j = 25 °C; typical values.

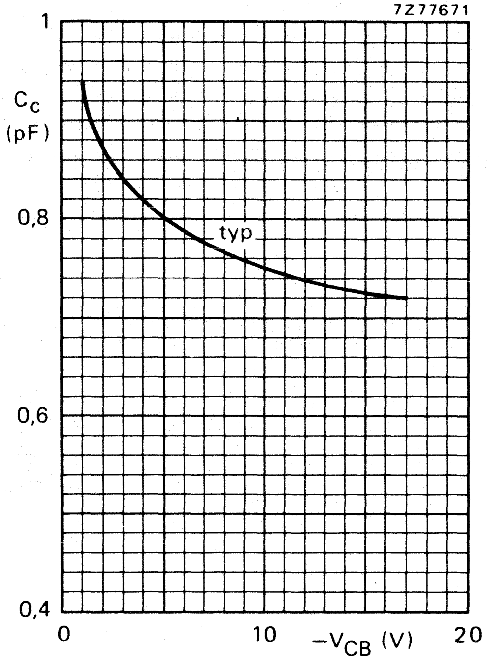

Fig. 5 $I_E = I_e = 0$; T_j = 25 °C; f = 1 MHz; typical values.

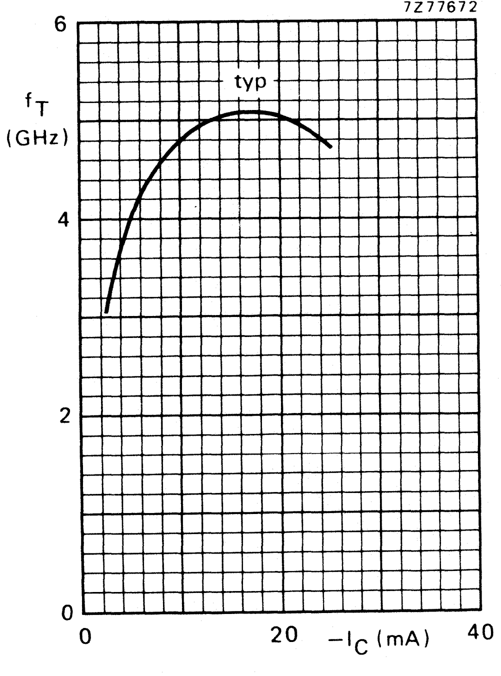

Fig. 6 $-V_{CE}$ = 10 V; f = 500 MHz; T_j = 25 °C; typical values.

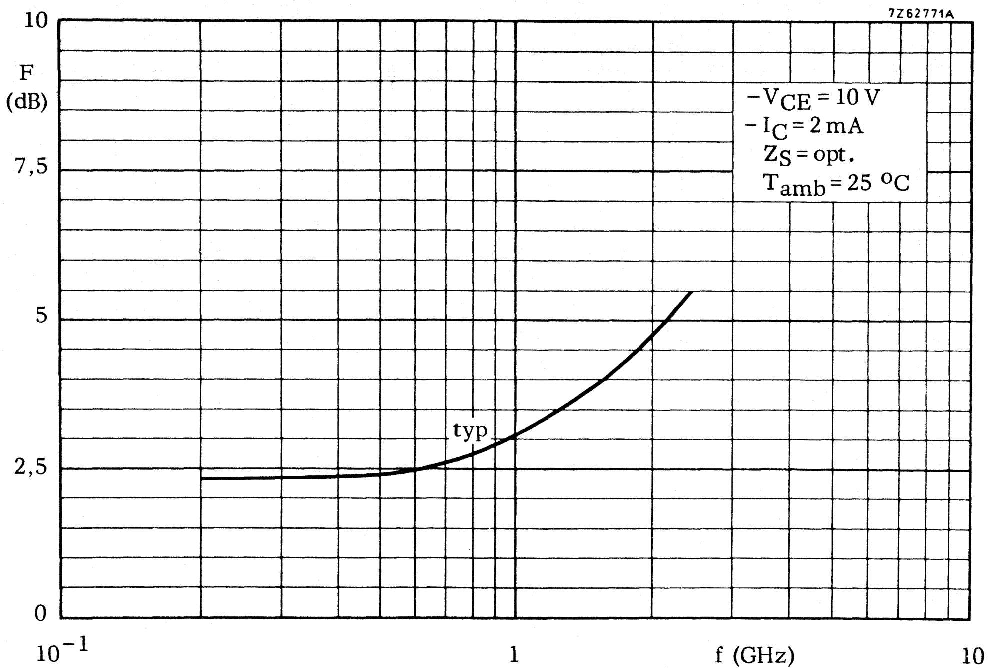

Fig. 7 $-V_{CE} = 10$ V; $-I_C = 2$ mA; Z_S = opt.; $T_{amb} = 25$ °C; typical values.

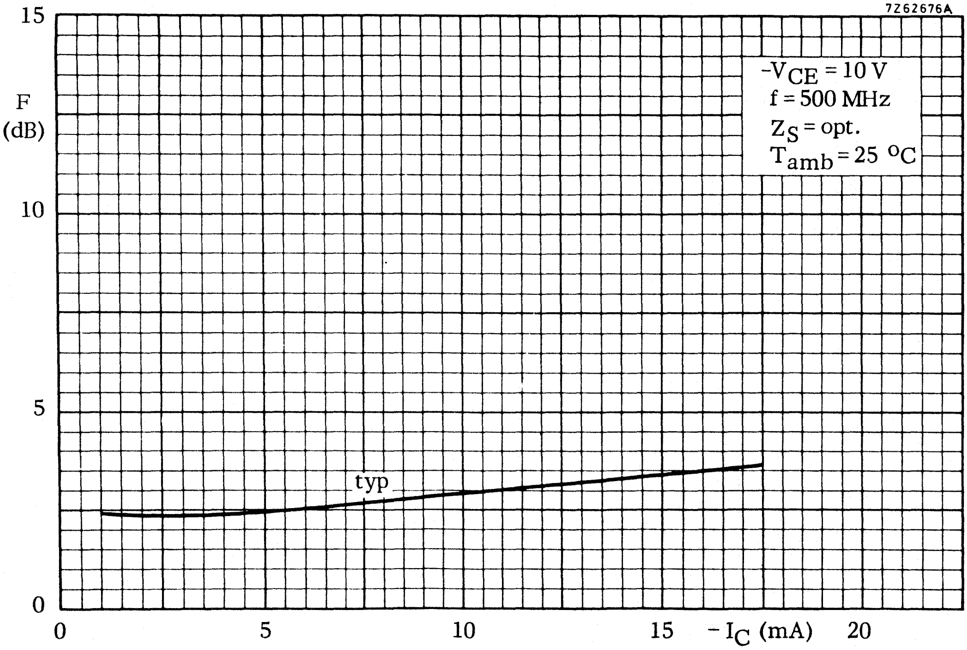

Fig. 8 $-V_{CE} = 10$ V; f = 500 MHz; Z_S = opt.; $T_{amb} = 25$ °C; typical values.

P-N-P 1 GHz WIDEBAND TRANSISTOR

P-N-P transistor in a plastic SOT-23 envelope. It is primarily intended for use in u.h.f. and microwave amplifiers in thick and thin-film circuits, such as in aerial amplifiers, radar systems, oscilloscopes, spectrum analyses, etc.

The transistor features low intermodulation distortion and high power gain; thanks to its very high transition frequency, it also has excellent wideband properties and low noise up to high frequencies.

N-P-N complements are BFR93 and BFR93A.

QUICK REFERENCE DATA

Collector-base voltage (open emitter)	$-V_{CBO}$	max.	15	V
Collector-emitter voltage (open base)	$-V_{CEO}$	max.	12	V
Collector current (d.c.)	$-I_C$	max.	35	mA
Total power dissipation up to T_{amb} = 60 °C	P_{tot}	max.	200	mW
Junction temperature	T_j	max.	150	°C
Transition frequency at f = 500 MHz $-I_C$ = 30 mA; $-V_{CE}$ = 5 V	f_T	typ.	5,0	GHz
Feedback capacitance at f = 1 MHz $-I_C$ = 2 mA; $-V_{CE}$ = 5 V	C_{re}	typ.	1,0	pF
Noise figure at optimum source impedance $-I_C$ = 2 mA; $-V_{CE}$ = 5 V; f = 500 MHz	F	typ.	2,4	dB
Max. unilateral power gain $-I_C$ = 30 mA; $-V_{CE}$ = 5 V; f = 500 MHz	G_{UM}	typ.	16,5	dB
Output voltage at d_{im} = −60 dB $-I_C$ = 30 mA; $-V_{CE}$ = 5 V; R_L = 75 Ω $f_{(p+q-r)}$ = 493,25 MHz	V_o	typ.	300	mV

MECHANICAL DATA

Dimensions in mm

Marking code

BFT93 = X1

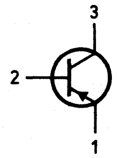

Fig. 1 SOT-23.

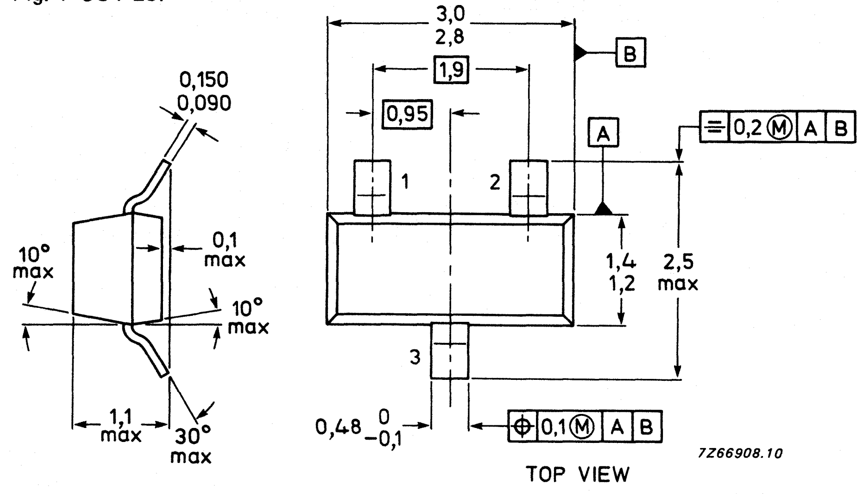

If required, the R-version (reverse pinning) is available on request.

RATINGS

Limiting values in accordance with the Absolute Maximum System (IEC 134)

Collector-base voltage (open emitter)	$-V_{CBO}$	max.	15	V
Collector-emitter voltage (open base)	$-V_{CEO}$	max.	12	V
Emitter-base voltage (open collector)	$-V_{EBO}$	max.	2	V
Collector current (d.c.)	$-I_C$	max.	35	mA
Collector current (peak value; f > 1 MHz)	$-I_{CM}$	max.	50	mA
Total power dissipation up to T_{amb} = 60 °C **	P_{tot}	max.	200	mW
Storage temperature	T_{stg}	−65 to + 150		°C
Junction temperature	T_j	max.	150	°C

THERMAL CHARACTERISTICS *

$$T_j = P \times (R_{th\ j\text{-}t} + R_{th\ t\text{-}s} + R_{th\ s\text{-}a}) + T_{amb}$$

Thermal resistance

From junction to tab	$R_{th\ j\text{-}t}$	=	60	K/W
From tab to soldering points	$R_{th\ t\text{-}s}$	=	280	K/W
From soldering points to ambient **	$R_{th\ s\text{-}a}$	=	90	K/W

---

* See *Thermal characteristics.*

** Mounted on a ceramic substrate of 8 mm x 10 mm x 0,7 mm.

CHARACTERISTICS

$T_j = 25\ ^{o}C$ unless otherwise specified

Collector cut-off current $I_E = 0; -V_{CB} = 5\ V$	$-I_{CBO}$	max.	50	nA
D.C. current gain $-I_C = 30\ mA; -V_{CE} = 5\ V$	h_{FE}	min. typ.	20 50	
Transition frequency at f = 500 MHz $-I_C = 30\ mA; -V_{CE} = 5\ V$	f_T	typ.	5,0	GHz
Collector capacitance at f = 1 MHz $I_E = I_e = 0; -V_{CB} = 10\ V$	C_c	typ.	0,95	pF
Emitter capacitance at f = 1 MHz $I_C = I_c = 0; -V_{EB} = 0,5\ V$	C_e	typ.	1,8	pF
$T_{amb} = 25\ ^{o}C$				
Feedback capacitance at f = 1 MHz $-I_C = 2\ mA; -V_{CE} = 5\ V$	C_{re}	typ.	1,0	pF
Noise figure at optimum source impedance * $-I_C = 2\ mA; -V_{CE} = 5\ V; f = 500\ MHz$	F	typ.	2,4	dB
Max. unilateral power gain (s_{re} assumed to be zero) $G_{UM} = 10 \log \frac{\lvert s_{fe}\rvert^2}{(1 - \lvert s_{ie}\rvert^2)(1 - \lvert s_{oe}\rvert^2)}$ $-I_C = 30\ mA; -V_{CE} = 5\ V; f = 500\ MHz$	G_{UM}	typ.	16,5	dB
Output voltage at $d_{im} = -60$ dB (see Fig. 2) $-I_C = 30\ mA; -V_{CE} = 5\ V; R_L = 75\ \Omega$ $V_p = V_o$ at $d_{im} = -60$ dB; $f_p = 495,25$ MHz $V_q = V_o - 6$ dB ; $f_q = 503,25$ MHz $V_r = V_o - 6$ dB ; $f_r = 505,25$ MHz measured at $f_{(p+q-r)} = 443,25$ MHz	V_o	typ.	300	mV

---

* Crystal mounted in SOT-37 envelope.

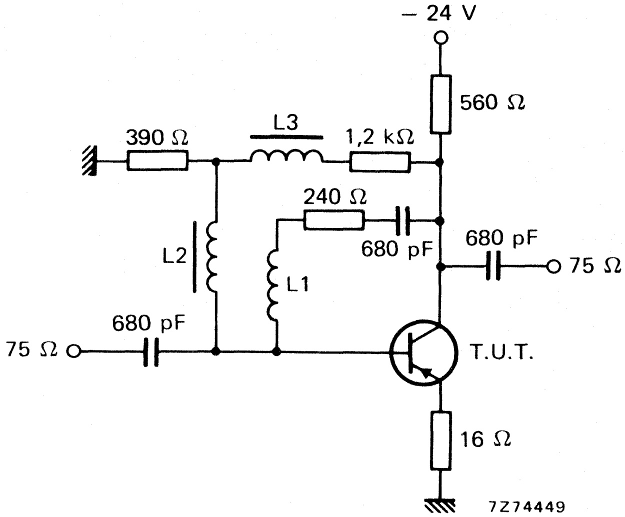

Fig. 2 Intermodulation test circuit.

L1 = 4 turns Cu wire (0,35); winding pitch 1 mm; int. dia. 4 mm.
L2 and L3 = 5 μH (catalogue number: 3122 108 20150).

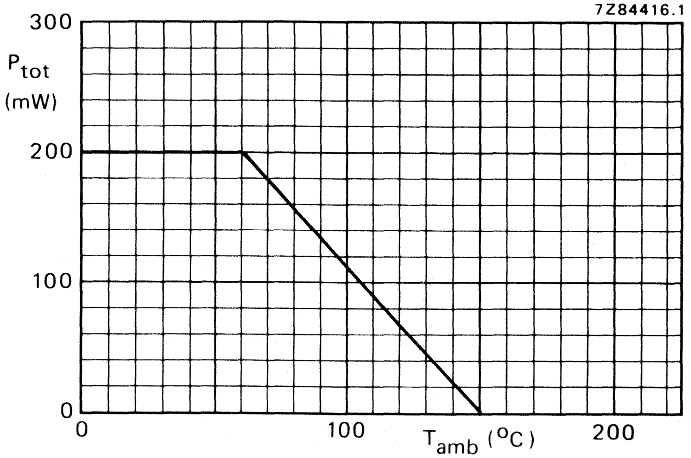

Fig. 3 Power derating curve.

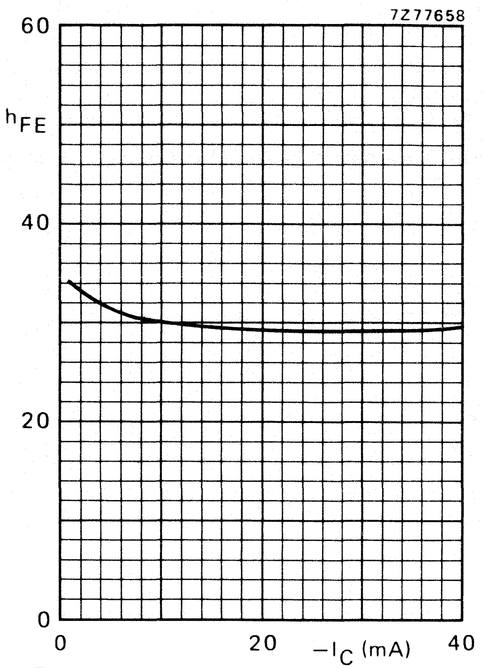

Fig. 4 $-V_{CE} = 5$ V; $T_j = 25$ °C; typical values.

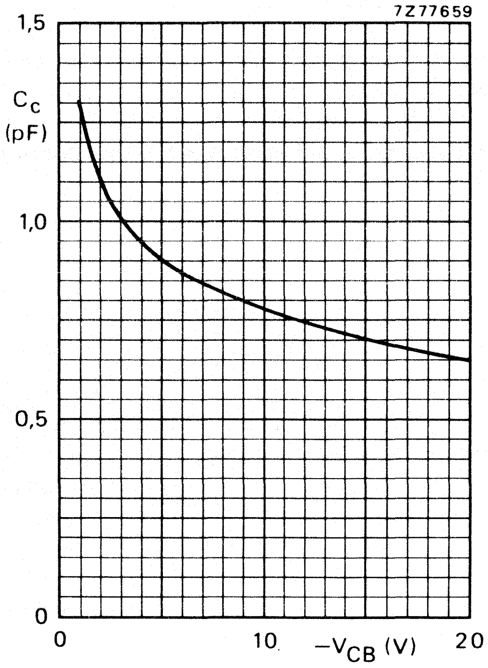

Fig. 5 $I_E = I_e = 0$; $T_j = 25$ °C; f = 1 MHz; typical values.

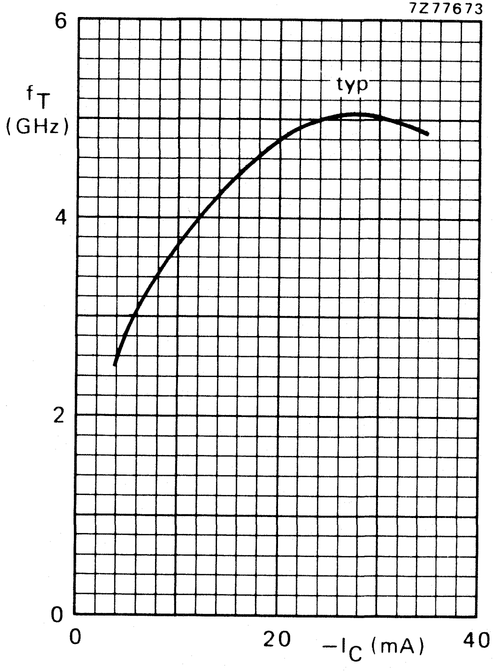

Fig. 6 $-V_{CE} = 5$ V; $T_j = 25$ °C; f = 500 MHz; typical values.

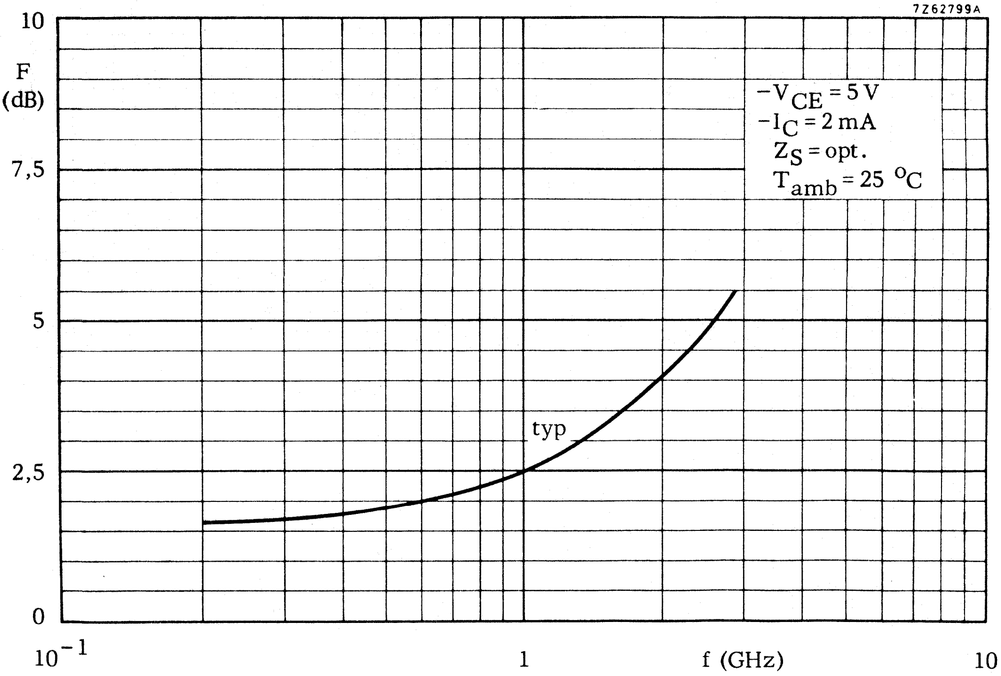

Fig. 7 $-V_{CE} = 5$ V; $-I_C = 2$ mA; Z_S = opt.; $T_{amb} = 25$ °C; typical values.

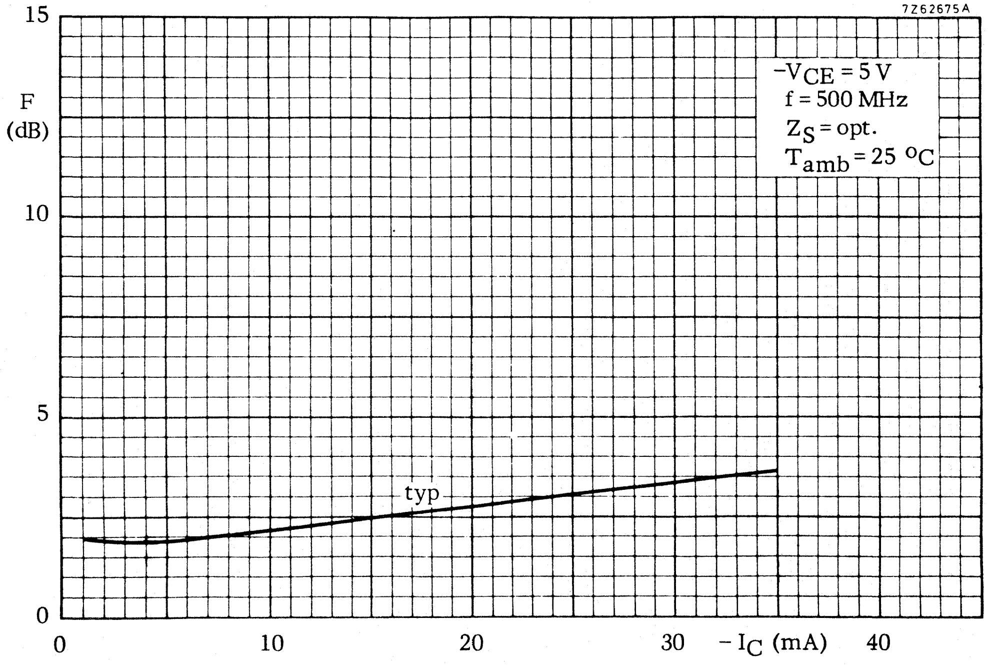

Fig. 8 $-V_{CE} = 5$ V; f = 500 MHz; Z_S = opt.; $T_{amb} = 25$ °C; typical values.

N-P-N H.F. WIDEBAND TRANSISTOR

N-P-N multi-emitter transistor in a TO-39 metal envelope, with the collector connected to the case. The transistor has extremely good intermodulation properties and a high power gain. It is a ruggedized version of the BFW16, which it succeeds. It is primarily intended for:

- Final and driver stages of channel and band aerial amplifiers with high output power for bands I, II, III and IV/V (40–860 MHz).
- Final stage of the wideband vertical amplifier in high speed oscilloscopes.

QUICK REFERENCE DATA

Collector-base voltage (open emitter; peak value)	V_{CBOM}	max.	40	V
Collector-emitter voltage (open base)	V_{CEO}	max.	25	V
Collector current (peak value; $f > 1$ MHz)	I_{CM}	max.	300	mA
Total power dissipation up to $T_{amb} = 125\ ^{o}C$	P_{tot}	max.	1,5	W
Junction temperature	T_j	max.	200	°C
Feedback capacitance at f = 1 MHz $I_C = 10$ mA; $V_{CE} = 15$ V	C_{re}	typ.	1,7	pF
Transition frequency $I_C = 150$ mA; $V_{CE} = 15$ V; f = 500 MHz	f_T	typ.	1,2	GHz
Power gain (not neutralized); $I_C = 70$ mA; $V_{CE} = 18$ V f = 200 MHz	G_p	typ.	16	dB
f = 800 MHz		typ.	6,5	dB
Output power $d_{im} = -30$ dB; VSWR at output < 2; $I_C = 70$ mA; $V_{CE} = 18$ V f = 200 MHz	P_o	typ.	150	mW
f = 800 MHz		typ.	90	mW

MECHANICAL DATA

Dimensions in mm

Collector connected to case

Fig. 1 TO-39.

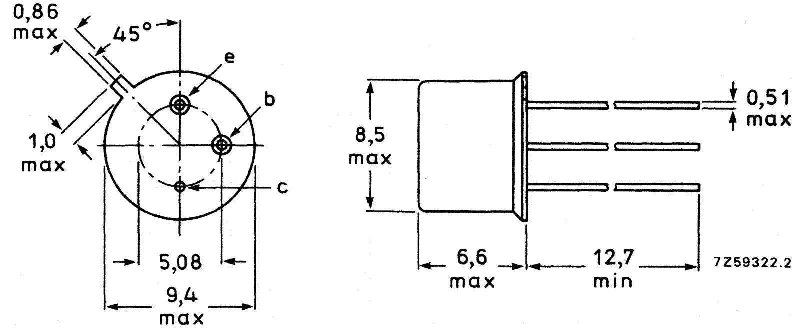

Maximum lead diameter is guaranteed only for 12,7 mm.

Accessories: 56245 (distance disc).

RATINGS

Limiting values in accordance with the Absolute Maximum System (IEC 134)

Collector-base voltage (open emitter; peak value)	V_{CBOM}	max.	40	V
Collector-emitter voltage ($R_{BE} \leqslant 50\ \Omega$) peak value	V_{CERM}	max.	40	V
Collector-emitter voltage (open base)	V_{CEO}	max.	25	V
Emitter-base voltage (open collector)	V_{EBO}	max.	2	V
Collector current (d.c.)	I_C	max.	150	mA
Collector current (peak value; $f > 1$ MHz)	I_{CM}	max.	300	mA
Total power dissipation up to $T_{amb} = 125\ ^{o}C$	P_{tot}	max.	1,5	W
Storage temperature	T_{stg}		−65 to + 200	^{o}C
Junction temperature	T_j	max.	200	^{o}C

THERMAL RESISTANCE

From junction to ambient in free air	$R_{th\ j\text{-}a}$	=	250	K/W
From junction to mounting base	$R_{th\ j\text{-}mb}$	=	50	K/W
From mounting base to heatsink mounted with top clamping washer of 56218 and a boron nitride washer for electrical insulation	$R_{th\ mb\text{-}h}$	=	1,2	K/W

CHARACTERISTICS

T_j = 25 °C unless otherwise specified

Collector cut-off current				
$I_E = 0$; $V_{CB} = 20$ V; $T_j = 150$ °C	I_{CBO}	max.	20	μA
Knee voltage				
$I_C = 100$ mA; I_B = value for which $I_C = 110$ mA at $V_{CE} = 1$ V	V_{CEK}	max.	0,75	V

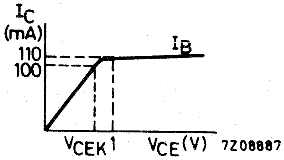

Fig. 2

D.C. current gain				
$I_C = 50$ mA; $V_{CE} = 5$ V	h_{FE}	min.	25	
$I_C = 150$ mA; $V_{CE} = 5$ V	h_{FE}	min.	25	
Transition frequency				
$I_C = 150$ mA; $V_{CE} = 15$ V; f = 500 MHz	f_T	typ.	1,2	GHz
Collector capacitance at f = 1 MHz				
$I_E = I_e = 0$; $V_{CB} = 15$ V	C_c	max.	4	pF
Feedback capacitance at f = 1 MHz				
$I_C = 10$ mA; $V_{CE} = 15$ V; $T_{amb} = 25$ °C	C_{re}	typ.	1,7	pF
Noise figure at f = 200 MHz				
$I_C = 30$ mA; $V_{CE} = 15$ V; $Z_S = 75\ \Omega$; $T_{amb} = 25$ °C	F	max.	6	dB
Power gain (not neutralized)				
$I_C = 70$ mA; $V_{CE} = 18$ V; $T_{amb} = 25$ °C				
f = 200 MHz	G_p	typ.	16	dB
f = 800 MHz		typ.	6,5	dB

CHARACTERISTICS (continued)

Intermodulation characteristics

1. Output power at f = 200 MHz; T_{amb} = 25 °C I_C = 70 mA; V_{CE} = 18 V; V.S.W.R. at output < 2 f_p = 202 MHz; f_q = 205 MHz; d_{im} = −30 dB measured at $f_{(2q-p)}$ = 208 MHz (Channel 9)	P_o	min. typ.	130 mW 150 mW

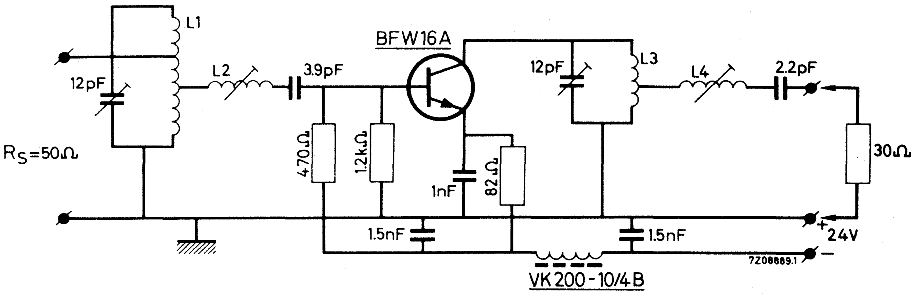

Fig. 3 Test circuit.

Coil data:

L1 = 3 turns silver plated Cu wire (1,4 mm); winding pitch 2,7 mm; int. diam. 8 mm; taps at 0,5 turn and 1,5 turns from earth.
L2 = 5,5 turns silver plated Cu wire (1,4 mm); winding pitch 2,2 mm; int. diam. 8 mm.
L3 = 3 turns silver plated Cu wire (1,4 mm); winding pitch 3,3 mm; int. diam. 8 mm.
L4 = 5,5 turns silver plated Cu wire (1,4 mm); winding pitch 2,2 mm; int. diam. 11 mm.

CHARACTERISTICS (continued)

Basis of adjustment

The intermodulation at an intermodulation distortion of –30 dB is caused by h.f. output current – voltage clipping.
The maximum undistorted output power is realised, if

a. Current and voltage clipping take place concurrently.
   This occurs if

$$R_L = \frac{V_{CE} - V_{CEK}}{I_C},$$

   in which V_{CEK} is the high frequency knee voltage.

b. The h.f. collector current is as small as possible.
   This is so if $-C_L = +C_{oe}$,
   in which C_{oe} is the output capacitance of the transistor at short circuited input.

For maximum output power at an intermodulation distortion of –30 dB, the (experimentally found) value of R_L and C_L are:
$R_L = 220\ \Omega$; $C_L = -5,6$ pF.

C_{oe} is found by 4 pF of the transistor and 1,6 pF by the mounting system concerning of a borium nitride washer between the envelope of the transistor and the chassis.

Adjustment procedure

1. Remove the transistor and connect a dummy consisting of a 220 Ω resistor in parallel with a 5,6 pF capacitor between the collector and emitter connections of the output circuit.
2. Tune and match the output circuit for zero reflection at 205 MHz (V.S.W.R. = 1).
   After this adjustment, no further change may be made in the output circuit.
3. Replace the dummy by the transistor. Tune and match the input circuit for maximum power gain and good band pass curve.
   The V.S.W.R. of the output will then, in most cases, be ⩽ 2 over the whole channel.
   Corrections can be made by tuning L2; this will not disturb the band pass curve.

CHARACTERISTICS (continued)

Intermodulation characteristics

2. Output power at f = 800 MHz; T_{amb} = 25 °C
I_C = 70 mA; V_{CE} = 18 V; V.S.W.R. at output < 2
f_p = 798 MHz; f_q = 802 MHz; d_{im} = −30 dB
measured at $f_{(2q-p)}$ = 806 MHz (Channel 62)

P_o	min.	70	mW
	typ.	90	mW

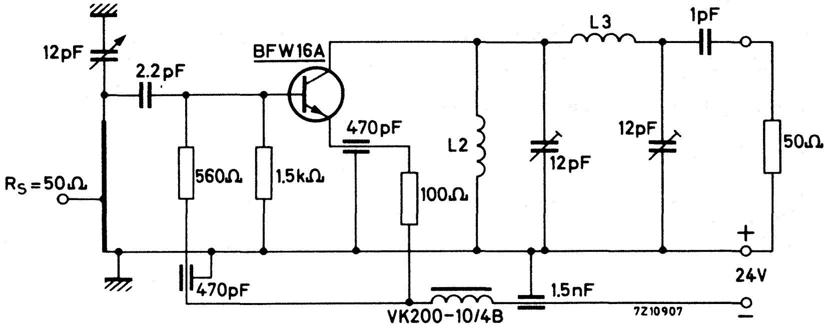

Fig. 4 Test circuit.

Coil data:
L1 = 25 mm x 7 mm x 0,85 mm silver plated Cu strip
Tap of the input at 5 mm from earth.
L2 = 13 turns enamelled Cu wire (0,6 mm); int. diam 8 mm.
L3 = 1,5 turns Cu wire (1,3 mm); int. diam. 8 mm.

Basis of adjustment

At 800 MHz no dummy can be used to adjust for optimum collector load because at these frequencies the impedance transformations of a dummy are too high. A small signal at the mid-channel frequency of 802 MHz is fed to the input and increased until clipping occurs; that is, until the output power no longer increases linearily with the input signal. This clipping can be eliminated by tuning the output circuit, thereby making the output power equal to

$$P_o = \frac{I_C(V_{CE} - V_{CEK})}{2} = 480 \text{ mW}.$$

The output circuit is adjusted for minimum intermodulation if the input signal is as small as possible at P_o = 480 mW.
With this adjusting method care must be taken, that the transistor is not destructed by second breakdown (the voltage swing may not exceed the rated V_{CER} value). Therefor as soon as clipping occurs, the increase of the input signal should be stopped until the clipping has been eliminated. After this adjustment has been made no further change may be made in the output circuit.
Adjust the input circuit for maximum power gain and good band pass curve. The V.S.W.R. of the output is then ⩽ 2 over the whole channel.

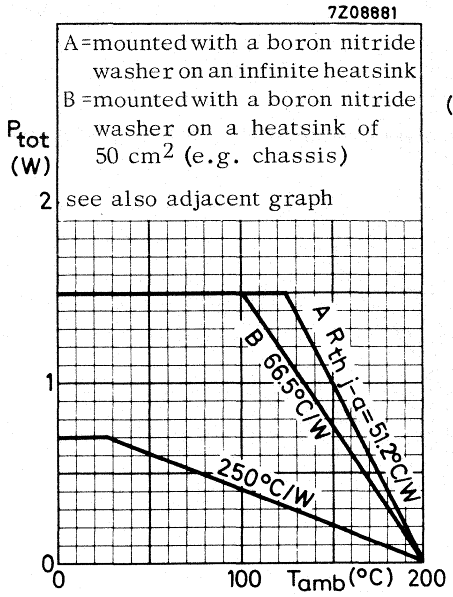

Fig. 5

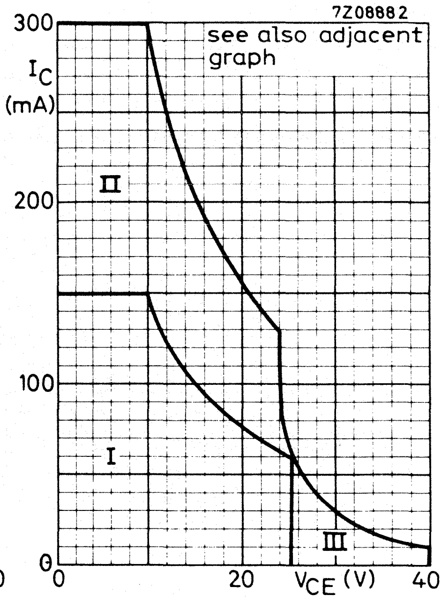

Fig. 6

I = Region of permissible operation under all base-emitter conditions and at all frequencies, including d.c.

II = Additional region of operation at f ⩾ 1 MHz.

III = Operating under pulsed conditions is allowed, provided the transistor is cut-off with $R_{BE} \leqslant 50\ \Omega$ and f ⩾ 1 MHz.

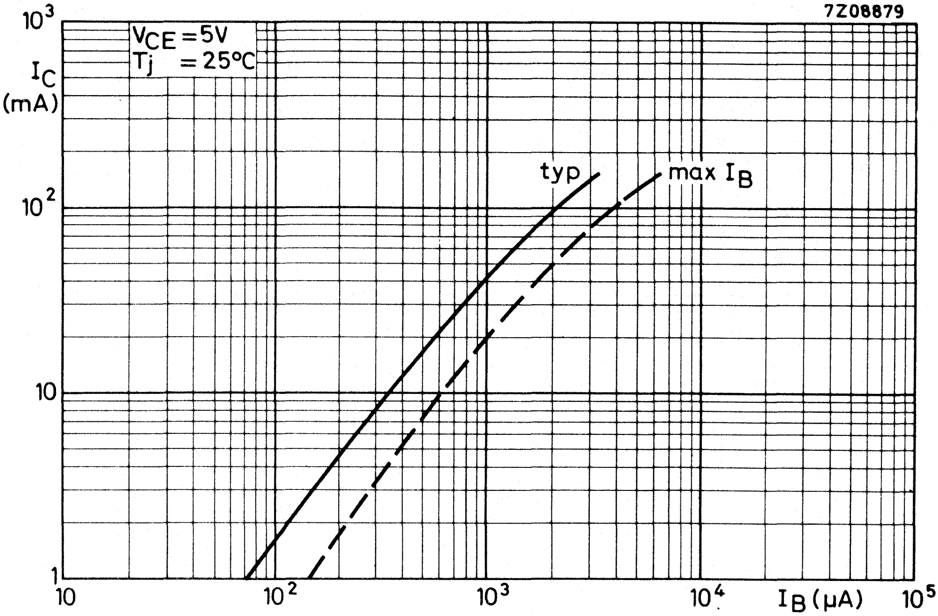

Fig. 7 V_{CE} = 5 V; T_j = 25 °C

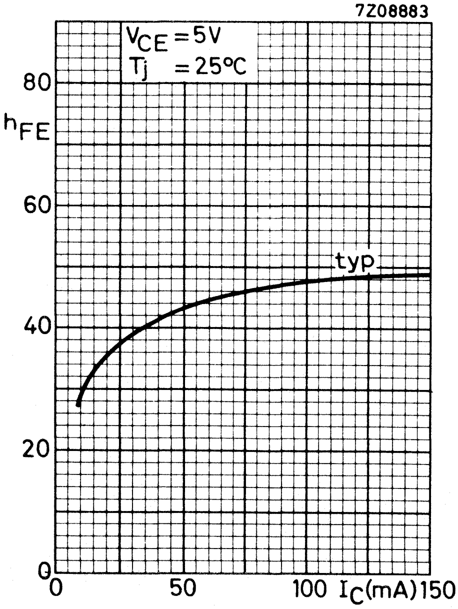

Fig. 8 V_{CE} = 5 V; T_j = 25 °C; typical values.

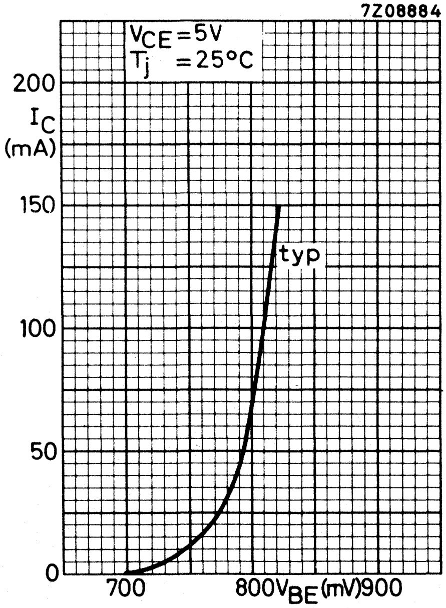

Fig. 9 V_{CE} = 5 V; T_j = 25 °C; typical values.

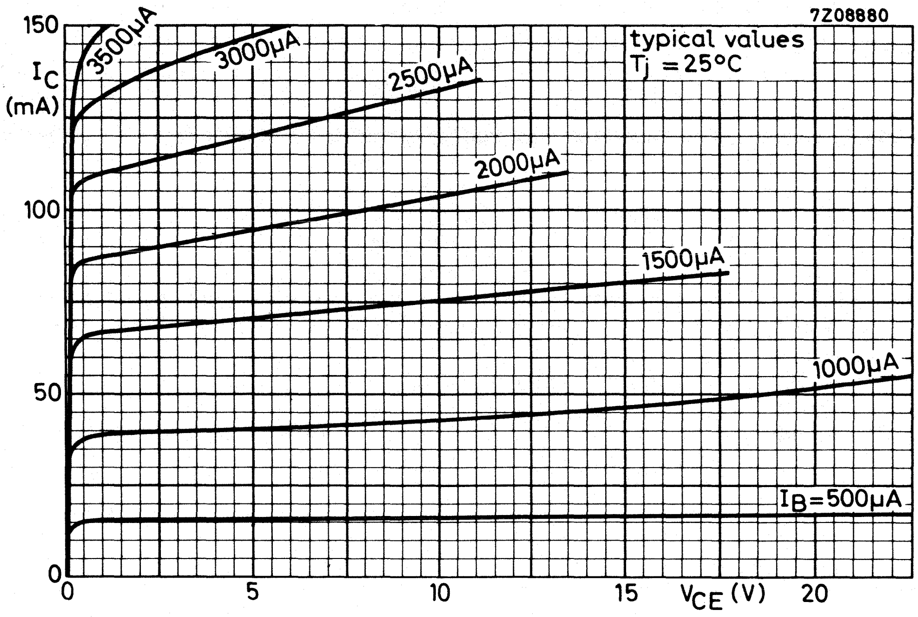

Fig. 10 $T_j = 25\ ^{o}C$; typical values.

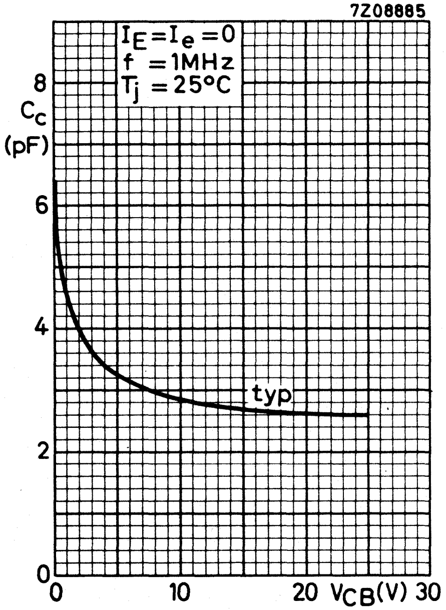

Fig. 11 $I_E = I_e = 0$; f = 1 MHz; $T_j = 25\ ^{o}C$; typical values.

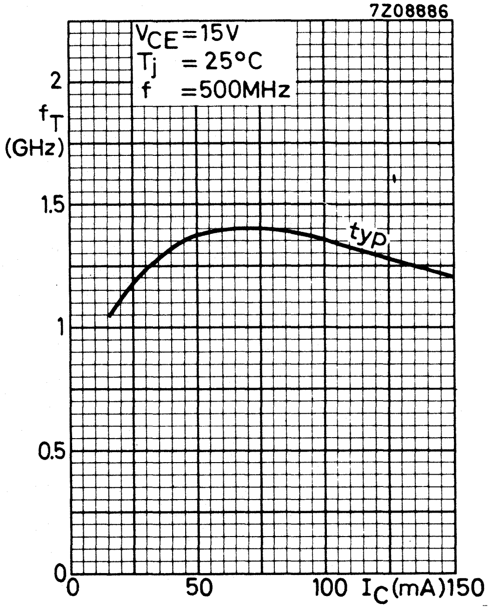

Fig. 12 $V_{CE} = 15$ V; f = 500 MHz; $T_j = 25\ ^{o}C$; typical values.

APPLICATION INFORMATION

Performance of channel- and band amplifiers*

Frequency range	channel 4 61-68	channel 9 202-209	channel 55 742-750	band I 47-68	band II 87,5-108	band III 174-230	MHz
Transistor used in							
final stage	BFW16A	BFW16A	BFW16A	BFW16A	BFW16A	BFW16A	
driver stage		BFW16A	BFW16A			BFW16A	
second stage			BFY90				
first stage	BFY90	BFY90	BFY90	BFY90	BFY90	BFY90	
Output power at							
d_{im} = –30 dB	150**	150**	100				mW
d_{im} = –50 dB					30		mW
d_{im} = –60 dB				10		10	mW
Power gain	50	44	26,5	51	43	39	dB
Noise figure	7	6	8	6,0-6,5	6,5	6,5	dB
V.S.W.R. over the whole channel or band							
for the input	< 2	< 2	< 2	< 2	< 2	< 2	
for the output	< 2	< 2	< 2	< 2	< 2	< 2	
Load impedance	30	30	50	30	30	30	Ω
Source impedance	60	60	50	60	60	60	Ω

---

* Application information bulletins of all these amplifiers and a study of intermodulation are available on request.

** V_o = 2,2 V over R_L = 30 Ω or
V_o = 3 V over R_L = 60 Ω.

N-P-N H.F. WIDEBAND TRANSISTOR

N-P-N multi-emitter transistor in a TO-39 metal envelope, with the collector connected to the case. The transistor has extremely good intermodulation properties and a high power gain. It is a ruggedized version of the BFW17, which it succeeds. It is primarily intended for final and driver stages of channel and band aerial amplifiers with high output power for bands I, II and III (40—230 MHz).

QUICK REFERENCE DATA

Collector-base voltage (open emitter; peak value)	V_{CBOM}	max.	40	V
Collector-emitter voltage (open base)	V_{CEO}	max.	25	V
Collector current (peak value; $f > 1$ MHz)	I_{CM}	max.	300	mA
Total power dissipation up to T_{mb} = 125 °C	P_{tot}	max.	1,5	W
Junction temperature	T_j	max.	200	°C
Feedback capacitance at f = 1 MHz I_C = 10 mA; V_{CE} = 15 V	C_{re}	typ.	1,7	pF
Transition frequency I_C = 150 mA; V_{CE} = 15 V; f = 500 MHz	f_T	typ.	1,1	GHz
Power gain (not neutralized) I_C = 70 mA; V_{CE} = 18 V; f = 200 MHz	G_p	typ.	16	dB
Output power d_{im} = −30 dB; VSWR at output < 2; I_C = 70 mA; V_{CE} = 18 V	P_o	typ.	150	mW

MECHANICAL DATA

Dimensions in mm

Collector connected to case

Fig. 1 TO-39.

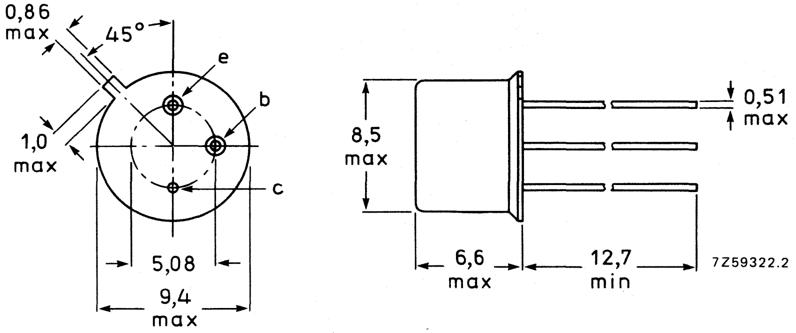

Maximum lead diameter is guaranteed only for 12,7 mm.

Accessories: 56245 (distance disc).

RATINGS

Limiting values in accordance with the Absolute Maximum System (IEC 134)

Collector-base voltage (open emitter; peak value)	V_{CBOM}	max.	40	V
→ Collector-emitter voltage ($R_{BE} \leqslant 50\ \Omega$) peak value	V_{CERM}	max.	40	V
→ Collector-emitter voltage (open base)	V_{CEO}	max.	25	V
Emitter-base voltage (open collector)	V_{EBO}	max.	2	V
Collector current (d.c.)	I_C	max.	150	mA
Collector current (peak value; $f > 1$ MHz)	I_{CM}	max.	300	mA
Total power dissipation up to $T_{mb} = 125\ ^oC$	P_{tot}	max.	1,5	W
Storage temperature	T_{stg}		−65 to +200	°C
Junction temperature	T_j	max.	200	°C

THERMAL RESISTANCE

From junction to ambient in free air	$R_{th\ j\text{-}a}$	=	250	K/W
From junction to mounting base	$R_{th\ j\text{-}mb}$	=	50	K/W
From mounting base to heatsink mounted with top clamping washer of 56218 and a boron nitride washer for electrical insulation	$R_{th\ mb\text{-}h}$	=	1,2	K/W

CHARACTERISTICS

$T_j = 25\ ^oC$ unless otherwise specified

Collector cut-off current $I_E = 0$; $V_{CB} = 20$ V; $T_j = 150\ ^oC$	I_{CBO}	max.	20	μA
Knee voltage $I_C = 100$ mA; I_B = value for which $I_C = 110$ mA at $V_{CE} = 1$ V	V_{CEK}	max.	0,75	V

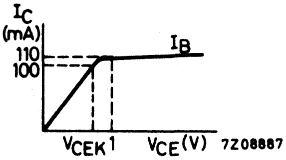

Fig. 2.

D.C. current gain			
$I_C = 50$ mA; $V_{CE} = 5$ V	h_{FE}	min.	25
$I_C = 150$ mA; $V_{CE} = 5$ V	h_{FE}	min.	25
Transition frequency			
$I_C = 150$ mA; $V_{CE} = 15$ V; f = 500 MHz	f_T	typ.	1,1 GHz
Collector capacitance at f = 1 MHz			
$I_E = I_e = 0$; $V_{CB} = 15$ V	C_c	max.	4,0 pF
Feedback capacitance at f = 1 MHz			
$I_C = 10$ mA; $V_{CE} = 15$ V; $T_{amb} = 25$ °C	C_{re}	typ.	1,7 pF
Power gain (not neutralized)			
$I_C = 70$ mA; $V_{CE} = 18$ V f = 200 MHz; $T_{amb} = 25$ °C	G_p	typ.	16 dB
Intermodulation characteristics			
Output power at f = 200 MHz; $T_{amb} = 25$ °C $I_C = 70$ mA; $V_{CE} = 18$ V; V.S.W.R. at output < 2 $f_p = 202$ MHz; $f_q = 205$ MHz; $d_{im} = -30$ dB measured at $f_{(2q-p)} = 208$ MHz (Channel 9)	P_o	typ.	150 mW

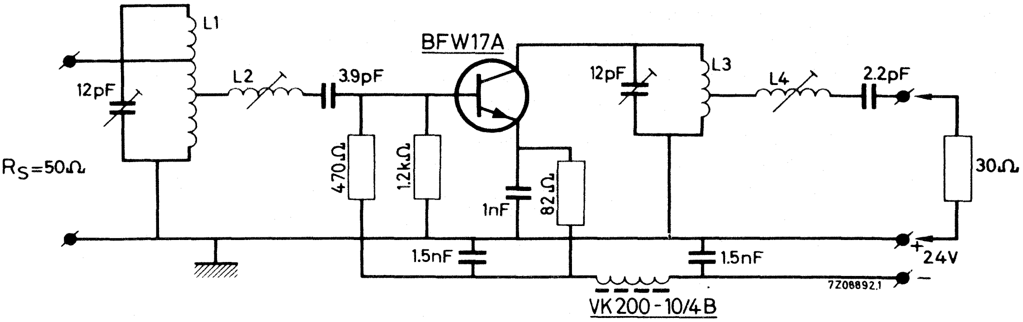

Fig. 3 Test circuit.

Coil data:

L1 = 3 turns silver plated Cu wire (1,4 mm); winding pitch 2,7 mm; int. diam. 8 mm; taps at 0,5 turn and 1,5 turns from earth.

L2 = 5,5 turns silver plated Cu wire (1,4 mm); winding pitch 2,2 mm; int. diam. 8 mm.

L3 = 3 turns silver plated Cu wire (1,4 mm); winding pitch 3,3 mm; int. diam. 8 mm.

L4 = 5,5 turns silver plated Cu wire (1,4 mm); winding pitch 2,2 mm; int. diam. 11 mm.

CHARACTERISTICS (continued)

Basis of adjustment

The intermodulation at an intermodulation distortion of –30 dB is caused by h.f. output current - voltage clipping.
The maximum undistorted output power is realised, if

a. Current and voltage clipping take place concurrently.
This occurs if

$$R_L = \frac{V_{CE} - V_{CEK}}{I_C}$$

in which V_{CEK} is the high frequency knee voltage.

b. The h.f. collector current is as small as possible.
This is so if $-C_L = +C_{oe}$,
in which C_{oe} is the output capacitance of the transistor at short circuited input.

For maximum output power at an intermodulation distortion of –30 dB, the (experimentally found) values of R_L and C_L are:
$R_L = 220\ \Omega$; $C_L = -5{,}6$ pF.
C_{oe} is found by 4 pF of the transistor and 1,6 pF by the mounting system concerning of a borium nitride washer between the envelope of the transistor and the chassis.

Adjustment procedure

1. Remove the transistor and connect a dummy consisting of a 220 Ω resistor in parallel with a 5,6 pF capacitor between the collector and emitter connections of the output circuit.
2. Tune and match the output circuit for zero reflection at 205 MHz (V.S.W.R. = 1). After this adjustment, no further change may be made in the output circuit.
3. Replace the dummy by the transistor. Tune and match the input circuit for maximum power gain and good band pass curve.
   The V.S.W.R. of the output will then, in most cases, be ⩽ 2 over the whole channel.
   Corrections can be made by tuning L2; this will not disturb the band pass curve.

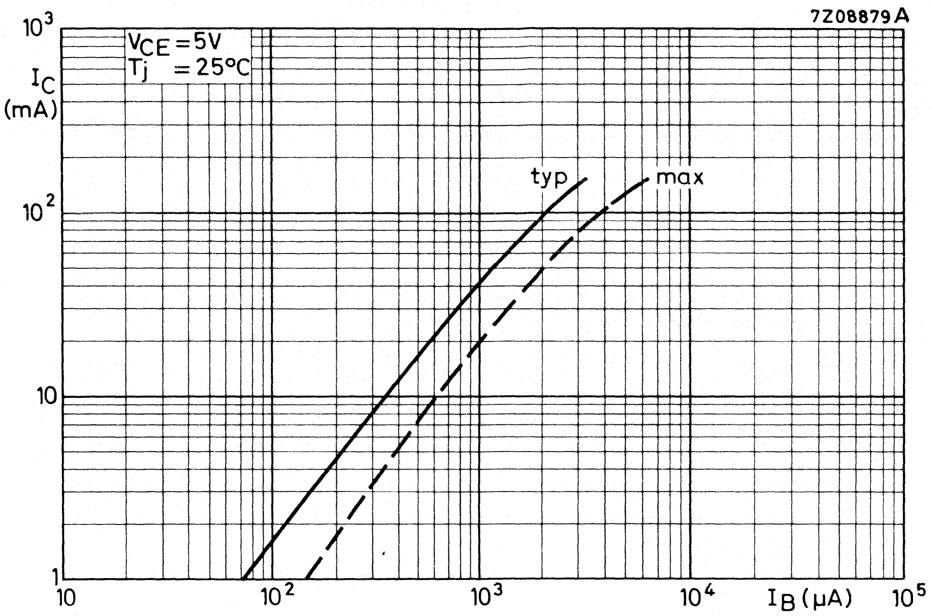

Fig. 4 V_{CE} = 5 V; T_j = 25 °C.

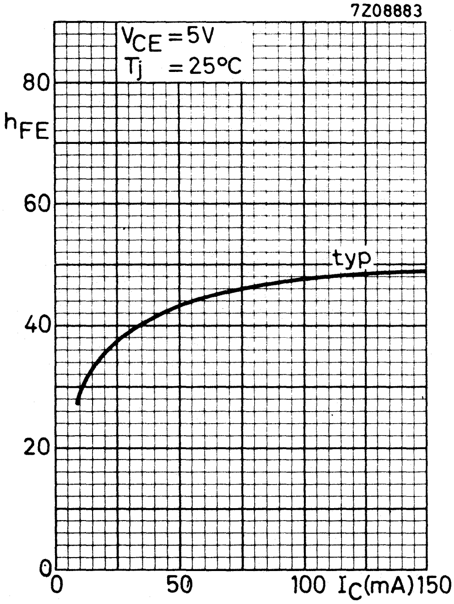

Fig. 5 V_{CE} = 5 V; T_j = 25 °C; typical values.

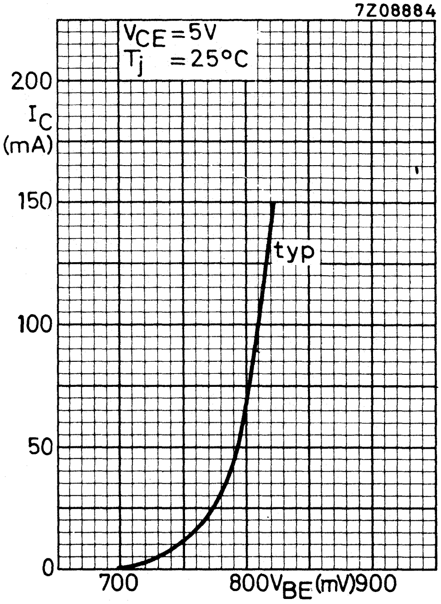

Fig. 6 V_{CE} = 5 V; T_j = 25 °C; typical values.

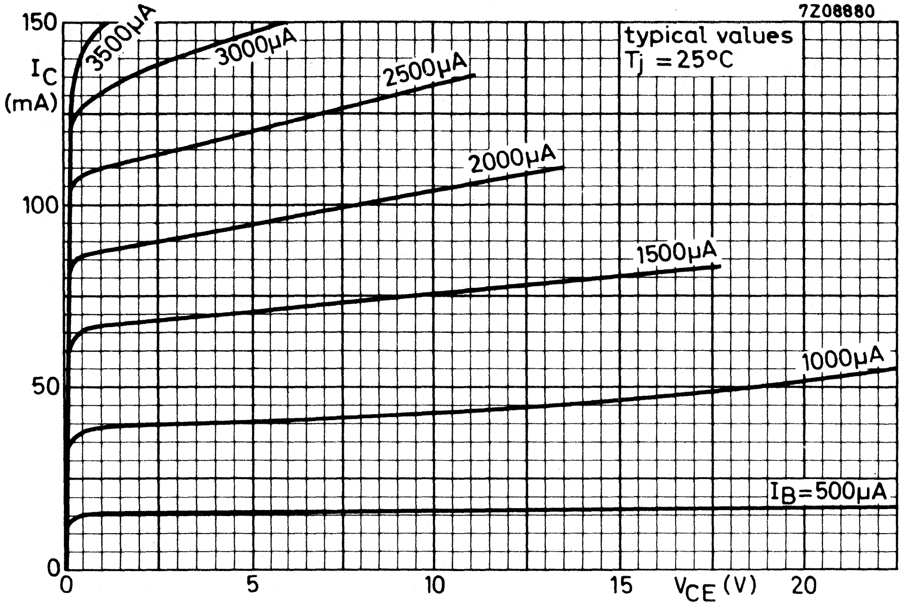

Fig. 7 T_j = 25 °C; typical values.

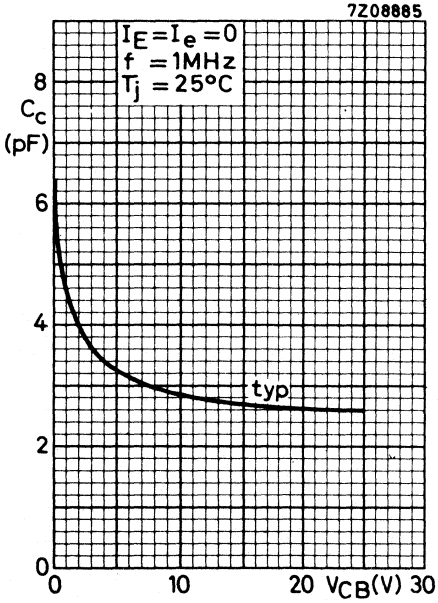

Fig. 8 $I_E = i_e = 0$; f = 1 MHz;
T_j = 25 °C; typical values.

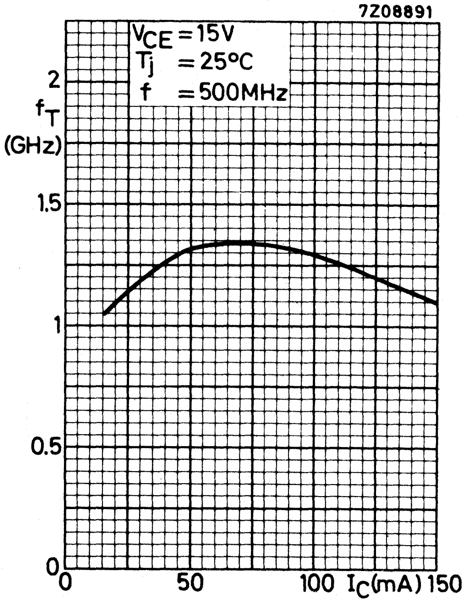

Fig. 9 V_{CE} = 15 V; f = 500 MHz;
T_j = 25 °C; typical values.

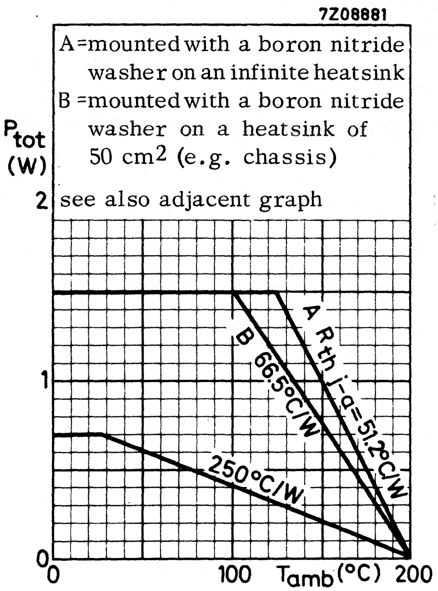

Fig. 10.

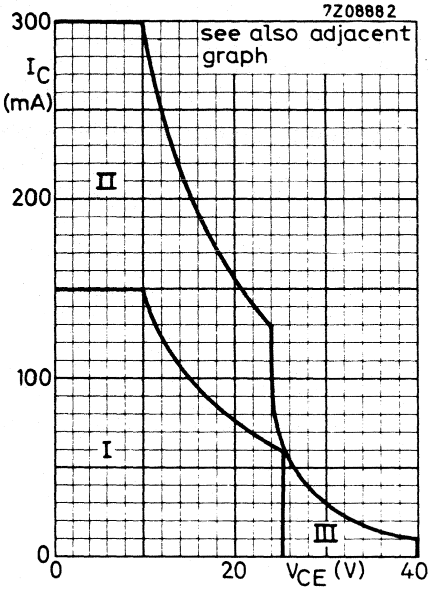

Fig. 11.

I = Region of permissible operation under all base-emitter conditions and at all frequencies, including d.c.

II = Additional region of operation at f ⩾ 1 MHz

III = Operating under pulsed conditions is allowed, provided the transistor is cut-off with $R_{BE} \leqslant 50\,\Omega$ and f ⩾ 1 MHz.

N-P-N H.F. WIDEBAND TRANSISTOR

N-P-N multi-emitter transistor in a TO-72 metal envelope, with insulated electrodes and a shield lead connected to the case. The transistor has very low intermodulation distortion and very high power gain. It is primarily intended for:
- Wideband vertical amplifiers in high speed oscilloscopes.
- Wideband aerial amplifiers (40–860 MHz).
- Television distribution amplifiers.

QUICK REFERENCE DATA

Collector-base voltage (open emitter; peak value)	V_{CBOM}	max.	20	V
Collector-emitter voltage (open base)	V_{CEO}	max.	10	V
Collector current (peak value; f > 1 MHz)	I_{CM}	max.	100	mA
Total power dissipation up to T_{amb} = 25 °C	P_{tot}	max.	250	mW
Junction temperature	T_j	max.	200	°C
Feedback capacitance at f = 1 MHz I_C = 2 mA; V_{CE} = 5 V	C_{re}	typ.	0,8	pF
Transition frequency I_C = 50 mA; V_{CE} = 5 V; f = 500 MHz	f_T	typ.	1,6	GHz
Power gain (not neutralized) I_C = 30 mA; V_{CE} = 5 V; f = 200 MHz	G_p	typ.	2,1	dB
f = 800 MHz		typ.	7,5	dB
Intermodulation distortion I_C = 30 mA; V_{CE} = 6 V; R_L = 37,5 Ω; V_o = 100 mV at f_p = 183 MHz; V_o = 100 mV at f_q = 200 MHz; measured at $f_{(2q-p)}$ = 217 MHz	d_{im}	typ.	−60	dB

MECHANICAL DATA

Dimensions in mm

Fig. 1 TO-72.

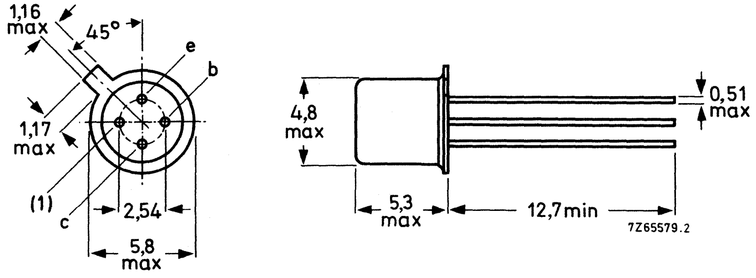

(1) = shield lead (connected to case).

Accessories: 56246 (distance disc).

RATINGS

Limiting values in accordance with the Absolute Maximum System (IEC 134)

Collector-base voltage (open emitter; peak value)	V_{CBOM}	max.	20	V
→ Collector-emitter voltage (open base)	V_{CEO}	max.	10	V
Emitter-base voltage (open collector)	V_{EBO}	max.	2,5	V
Collector current (d.c.)	I_C	max.	50	mA
Collector current (peak value; f > 1 MHz)	I_{CM}	max.	100	mA
Total power dissipation up to T_{amb} = 25 °C	P_{tot}	max.	250	mW
Storage temperature	T_{stg}		−65 to +200	°C
Junction temperature	T_j	max.	200	°C

THERMAL RESISTANCE

From junction to ambient in free air	$R_{th\ j\text{-}a}$	=	700	K/W
From junction to case	$R_{th\ j\text{-}c}$	=	500	K/W

CHARACTERISTICS

T_j = 25 °C unless otherwise specified

Collector cut-off current				
$I_E = 0$; $V_{CB} = 10$ V	I_{CBO}	max.	50	nA
D.C. current gain				
$I_C = 25$ mA; $V_{CE} = 5$ V	h_{FE}	min.	25	
$I_C = 50$ mA; $V_{CE} = 5$ V	h_{FE}	min.	25	
Transition frequency*				
$I_C = 50$ mA; $V_{CE} = 5$ V; f = 500 MHz	f_T	typ.	1,6	GHz
Collector capacitance at f = 1 MHz**				
$I_E = I_e = 0$; $V_{CB} = 5$ V	C_c	max.	1,5	pF
Feedback capacitance at f = 1 MHz*				
$I_C = 2$ mA; $V_{CE} = 5$ V	$-C_{re}$	typ.	0,8	pF
Noise figure*				
$I_C = 2$ mA; $V_{CE} = 5$ V f = 500 MHz; $Z_s = 50\ \Omega$	F	max.	5,0	dB ←
Power gain (not neutralized)*		f = 200	800	MHz
$I_C = 30$ mA; $V_{CE} = 5$ V; $T_{amb} = 25$ °C	G_p	> 19		dB
		typ. 21	7,5	dB
Intermodulation distortion*				
$I_C = 30$ mA; $V_{CE} = 6$ V; $R_L = 37{,}5\ \Omega$; $T_{amb} = 25$ °C $V_o = 100$ mV at $f_p = 183$ MHz $V_o = 100$ mV at $f_q = 200$ MHz measured at $f_{(2q-p)} = 217$ MHz	d_{im}	typ.	−60	dB

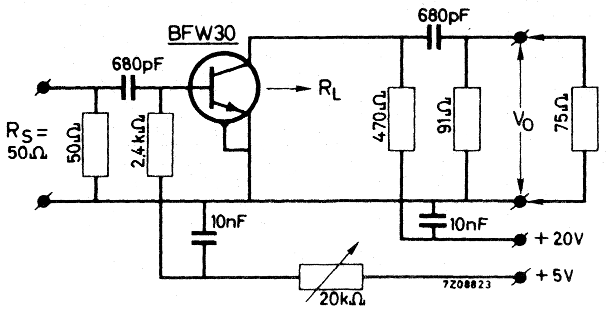

Fig. 2 Test circuit.

---

* Shield lead grounded.

** Shield lead not connected.

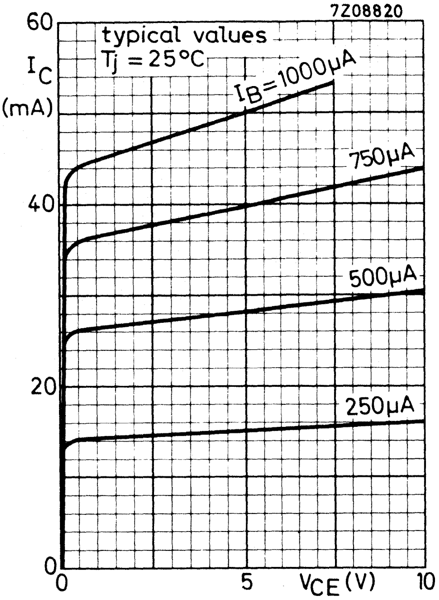

Fig. 3 T_j = 25 °C; typical values.

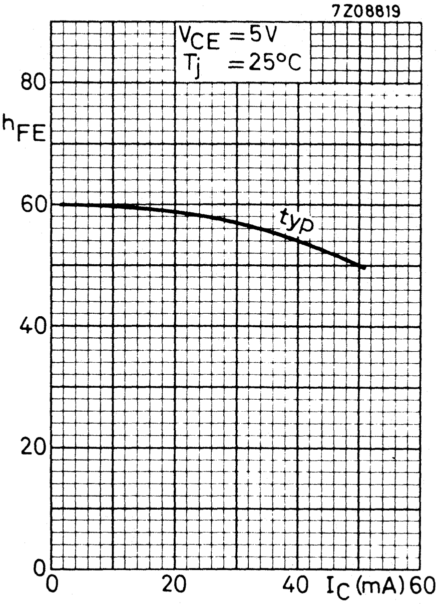

Fig. 4 V_{CE} = 5 V; T_j = 25 °C; typical values.

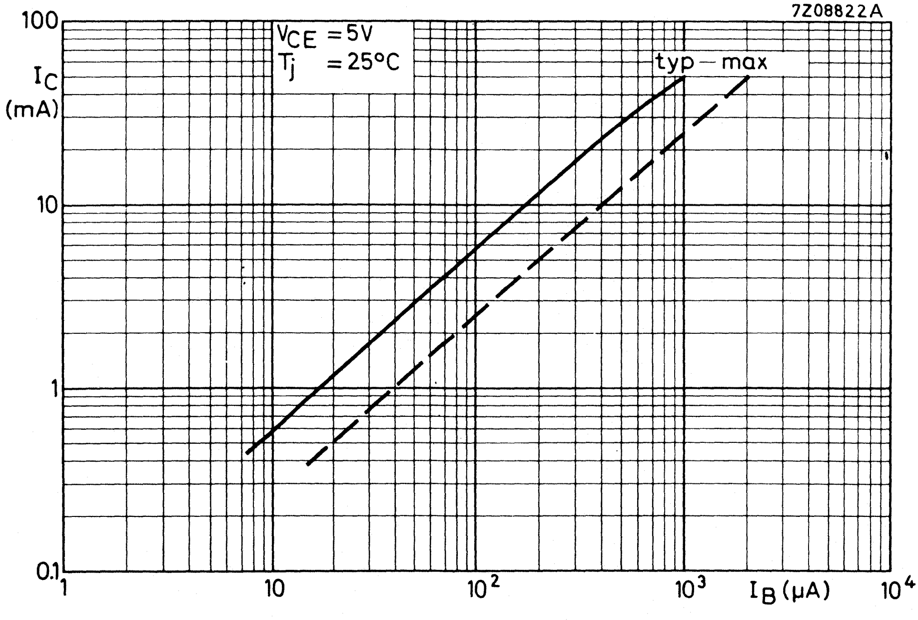

Fig. 5 V_{CE} = 5 V; T_j = 25 °C.

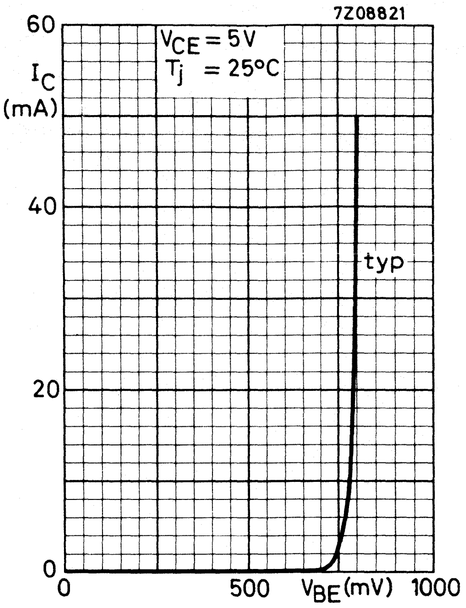

Fig. 6 $V_{CE} = 5$ V; $T_j = 25$ °C; typical values.

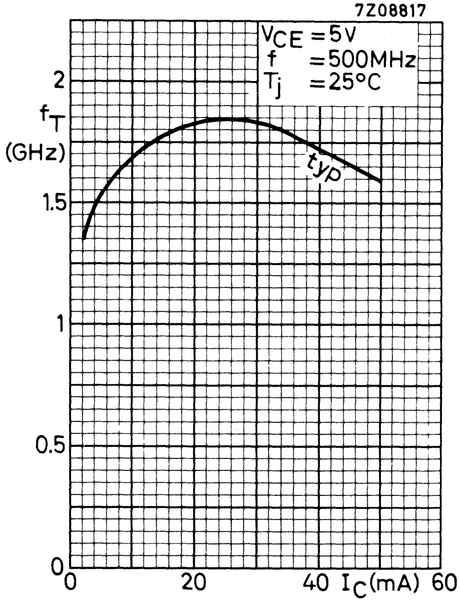

Fig. 7 $V_{CE} = 5$ V; f = 500 MHz; $T_j = 25$ °C; typical values.

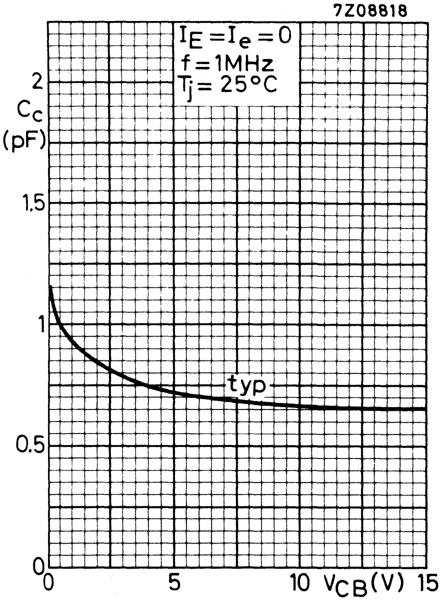

Fig. 8 $I_E = i_e = 0$; f = 1 MHz; $T_j = 25$ °C; typical values.

N-P-N H.F. WIDEBAND TRANSISTOR

N-P-N transistor in a plastic SOT-37 envelope. It has a low noise over a wide current range, a very high power gain and good intermodulation properties.
It is primarily intended for:
- Wideband aerial amplifiers (40 - 860 MHz)
- Channel and band aerial amplifiers for band I, II, III and IV/V (40 - 860 MHz)
- Television distribution amplifiers
- Low noise wideband vertical amplifier in high speed oscilloscopes

QUICK REFERENCE DATA

Collector-base voltage (open emitter; peak value)	V_{CBOM}	max.		25	V
Collector-emitter voltage (open base)	V_{CEO}	max.		15	V
Collector current (peak value; f > 1 MHz)	I_{CM}	max.		50	mA
Total power dissipation up to T_{amb} = 70 °C	P_{tot}	max.		200	mW
Junction temperature	T_j	max.		150	°C
Transition frequency at f = 500 MHz I_C = 25 mA; V_{CE} = 5 V	f_T	typ.		1,6	GHz
Feedback capacitance at f = 1 MHz I_C = 2 mA; V_{CE} = 5 V	C_{re}	typ.		0,6	pF
Noise figure at f = 500 MHz I_C = 2 mA; V_{CE} = 5 V	F	typ.		4	dB
Power gain (not neutralized)		f =	200	800	MHz
I_C = 10 mA; V_{CE} = 10 V	G_p	typ.	23	11	dB
Output power at d_{im} = −30 dB VSWR at output < 2; I_C = 10 mA; V_{CE} = 10 V	P_o	typ.	8	8	mW

MECHANICAL DATA

Dimensions in mm

Fig. 1 SOT-37.

Connections

1. Base
2. Emitter
3. Collector

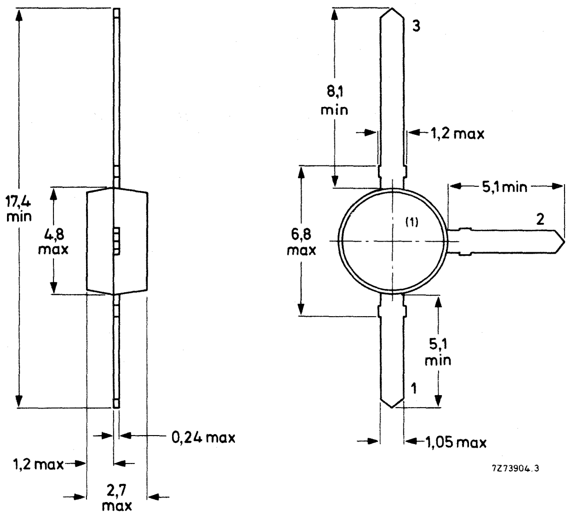

(1) = type number marking.

RATINGS

Limiting values in accordance with the Absolute Maximum System (IEC 134)

Collector-base voltage (open emitter; peak value)	V_{CBOM}	max.	25	V
Collector-emitter voltage (open base)	V_{CEO}	max.	15	V
Emitter-base voltage (open collector)	V_{EBO}	max.	2,5	V
Collector current (d.c.)	I_C	max.	25	mA
Collector current (peak value; $f > 1$ MHz)	I_{CM}	max.	50	mA
Total power dissipation up to $T_{amb} = 70$ °C	P_{tot}	max.	200	mW
Storage temperature	T_{stg}		−65 to +150	°C
Junction temperature	T_j	max.	150	°C

THERMAL RESISTANCE

From junction to ambient in free air mounted on a glass-fibre print of 40 mm x 25 mm x 1 mm (Fig. 2)	$R_{th\ j\text{-}a}$	=	400	K/W

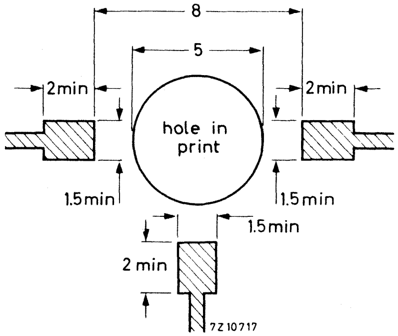

Fig. 2 Requirements for fibre-glass print (dimensions in mm).

CHARACTERISTICS

T_j = 25 °C unless otherwise specified

Collector cut-off current			
$I_E = 0$; $V_{CB} = 10$ V	I_{CBO}	max.	50 nA
Knee voltage			
$I_C = 20$ mA; I_B = value for which $I_C = 22$ mA at $V_{CE} = 1$ V	V_{CEK}	max.	0,75 V

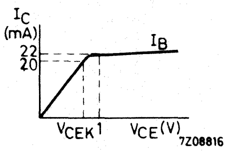

Fig. 3.

D.C. current gain			
$I_C = 2$ mA; $V_{CE} = 1$ V	h_{FE}	min. max.	20 150
$I_C = 25$ mA; $V_{CE} = 1$ V	h_{FE}	min.	20
Transition frequency at f = 500 MHz			
$I_C = 2$ mA; $V_{CE} = 5$ V	f_T	typ.	1,0 GHz
$I_C = 25$ mA; $V_{CE} = 5$ V	f_T	typ.	1,6 GHz
Collector capacitance at f = 1 MHz			
$I_E = I_e = 0$; $V_{CB} = 10$ V	C_c	typ.	0,7 pF
Emitter capacitance at f = 1 MHz			
$I_C = I_c = 0$; $V_{EB} = 0{,}5$ V	C_e	typ.	1,5 pF
Feedback capacitance at f = 1 MHz			
$I_C = 2$ mA; $V_{CE} = 5$ V; $T_{amb} = 25$ °C	C_{re}	typ.	0,6 pF
Noise figure at f = 500 MHz			
$I_C = 2$ mA; $V_{CE} = 5$ V; $R_S = 50\ \Omega$; $T_{amb} = 25$ °C	F	typ.	4,0 dB
Power gain (not neutralized)			
$I_C = 10$ mA; $V_{CE} = 10$ V; $T_{amb} = 25$ °C;			
f = 200 MHz	G_p	typ.	23 dB
f = 800 MHz		typ.	11 dB

CHARACTERISTICS (continued)

Intermodulation characteristics

1. Output power at f = 200 MHz; T_{amb} = 25 °C
   I_C = 10 mA; V_{CE} = 10 V; VSWR at output < 2
   f_p = 202 MHz; f_q = 205 MHz; d_{im} = −30 dB
   measured at $f_{(2q-p)}$ = 208 MHz (Channel 9) | P_o | typ. | 8 mW

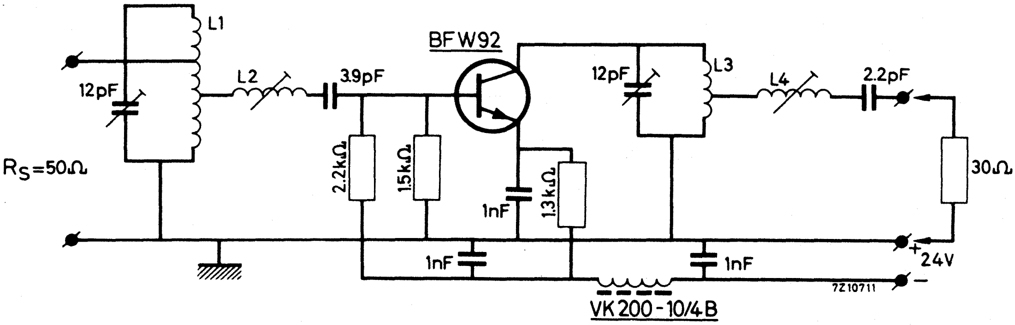

Fig. 4 Test circuit.

Coil data:

L1 = 3 turns silver plated Cu wire (1,4 mm); winding pitch 2,7 mm; int. diam. 8 mm; taps at 0,5 turn and 1,5 turns from earth.
L2 = 5,5 turns silver plated Cu wire (1,4 mm); winding pitch 2,2 mm; int. diam. 8 mm.
L3 = 3 turns silver plated Cu wire (1,4 mm); winding pitch 3,3 mm; int. diam. 8 mm.
L4 = 5,5 turns silver plated Cu wire (1,4 mm); winding pitch 2,2 mm; int. diam. 11 mm.

Basis of adjustment

The intermodulation at an intermodulation distortion of −30 dB is caused by h.f. output current - voltage clipping.
The maximum undistorted output power is realised, if

a. Current and voltage clipping take place concurrently.
This occurs if

$$R_L = \frac{V_{CE} - V_{CEK}}{I_C},$$

in which V_{CEK} is the high frequency knee voltage.

b. The h.f. collector current is as small as possible.
This is so if $-C_L = +C_{oe}$,
in which C_{oe} is the output capacitance of the transistor at short circuited input.

For maximum output power at an intermodulation distortion of −30 dB, the (experimentally found) values of R_L and C_L are:
$R_L = 820\ \Omega$; $C_L = -1{,}0$ pF.

Adjustment procedure

1. Remove the transistor and connect a dummy consisting of a 820 Ω resistor in parallel with a 1,0 pF capacitor between the collector and emitter connections of the output circuit.
2. Tune and match the output circuit for zero reflection at 205 MHz (VSWR = 1). After this adjustment, no further change may be made in the output circuit.
3. Replace the dummy by the transistor. Tune and match the input circuit for maximum power gain and good band pass curve.
   The VSWR of the output will then, in most cases, be ⩽ 2 over the whole channel.
   Corrections can be made by tuning L2; this will not disturb the band pass curve.

CHARACTERISTICS (continued)

Intermodulation characteristics

2. Output power at f = 800 MHz; T_{amb} = 25 °C
I_C = 10 mA; V_{CE} = 10 V; VSWR at output < 2
f_p = 798 MHz; f_q = 802 MHz; d_{im} = −30 dB
measured at $f_{(2q-p)}$ = 806 MHz (Channel 62) P_o typ. 8 mW

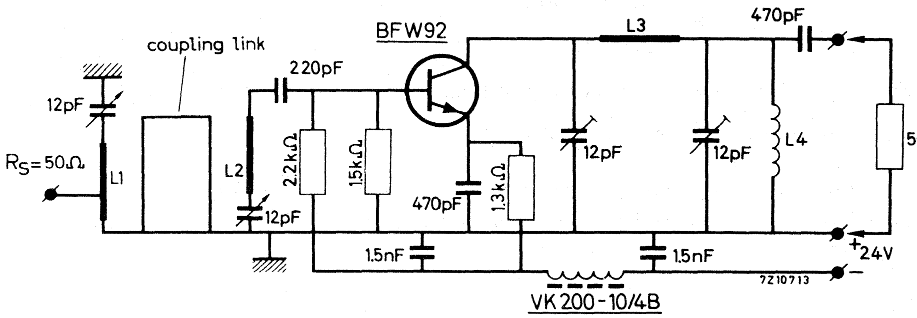

Fig. 5 Test circuit.

Coil data:

L1 = 24 mm x 6 mm x 0,5 mm silver plated Cu strip.
Tap of the input at 5 mm from earth.
L2 = 15 mm x 6 mm x 0,5 mm silver plated Cu strip.
L3 = 20 mm x 8 mm x 0,5 mm silver plated Cu strip.
L4 = 4 turns enamelled Cu wire (0,5 mm); winding pitch 1,5 mm; int. diam. 4 mm
Coupling link: 42 mm silver plated Cu wire (1 mm).

Basis of adjustment

At 800 MHz no dummy can be used to adjust for optimum collector load because at these frequencies the impedance transformations of a dummy are too high. A small signal at the mid-channel frequency of 802 MHz is fed to the input and increased until clipping occurs; that is, until the output power no longer increases linearily with the input signal. This clipping can be eliminated by tuning the output circuit, thereby making the output power equal to

$$P_o = \frac{I_C\,(V_{CE} - V_{CEK})}{2} = 40 \text{ mW}$$

The output circuit is adjusted for minimum intermodulation if the input signal is as small as possible at P_o = 40 mW.
After this adjustment has been made no further change may be made in the output circuit.
Adjust the input circuit for maximum power gain and good band pass curve.
The VSWR of the output is then ⩽ 2 over the whole channel.

Intermodulation characteristics

3. Intermodulation distortion
I_C = 10 mA; V_{CE} = 6 V; R_L = 37,5 Ω; T_{amb} = 25 °C
V_o = 100 mV at f_p = 183 MHz
V_o = 100 mV at f_q = 200 MHz
measured at $f_{(2q-p)}$ = 217 MHz | d_{im} typ. −45 dB

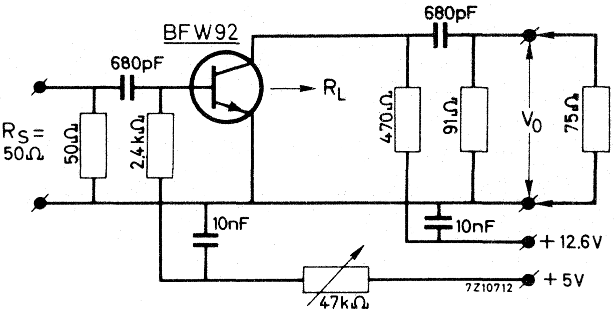

Fig. 6 Test circuit.

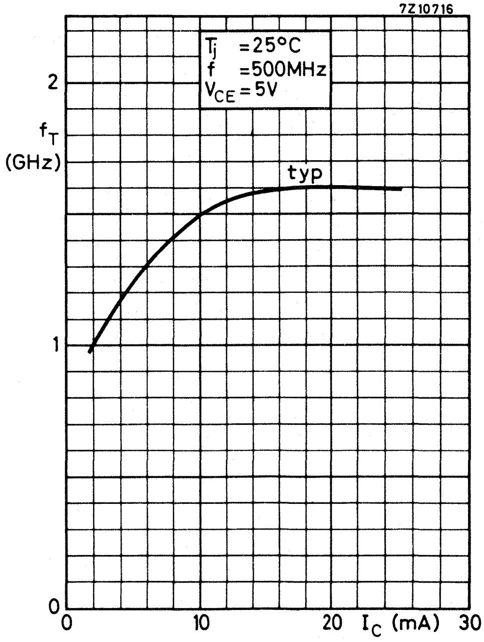

Fig. 7 V_{CE} = 5 V; f = 500 MHz; T_j = 25 °C; typical values.

N-P-N 1 GHz WIDEBAND TRANSISTOR

N-P-N transistor in a plastic SOT-37 envelope primarily intended for use in amplifiers in the 40-860 MHz range. The BFW92A is the successor to the BFW92 and offers higher power gain and improved noise behaviour.

QUICK REFERENCE DATA

Collector-base voltage (open emitter)	V_{CBO}	max.	25	V
Collector-emitter voltage (open base)	V_{CEO}	max.	15	V
Collector current (d.c.)	I_C	max.	25	mA
Total power dissipation up to T_{amb} = 70 °C	P_{tot}	max.	200	mW
Junction temperature	T_j	max.	150	°C
Transition frequency at f = 500 MHz I_C = 25 mA; V_{CE} = 5 V	f_T	typ.	2,8	GHz
Feedback capacitance at f = 1 MHz I_C = 0; V_{CE} = 5 V	C_{re}	typ.	0,45	pF
Noise figure at f = 800 MHz I_C = 2 mA; V_{CE} = 5 V; Z_S = 60 Ω	F	typ.	2,5	dB
Maximum unilateral power gain at f = 800 MHz I_C = 14 mA; V_{CE} = 10 V	G_{UM}	typ.	13	dB
Output voltage at d_{im} = −60 dB I_C = 14 mA; V_{CE} = 10 V; R_L = 75 Ω $f_{(p+q-r)}$ = 793,25 MHz	V_o	typ.	150	mV

MECHANICAL DATA

Fig. 1 SOT-37.

Connections

1. Base
2. Emitter
3. Collector

Dimensions in mm

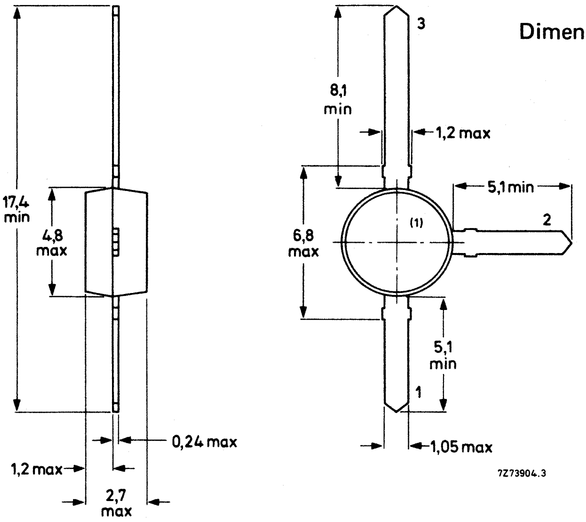

(1) Type number marking.

RATINGS

Limiting values in accordance with the Absolute Maximum System (IEC 134)

Collector-base voltage (open emitter)	V_{CBO}	max.	25	V
Collector-emitter voltage (open base)	V_{CEO}	max.	15	V
Emitter-base voltage (open collector)	V_{EBO}	max.	2,5	V
Collector current (d.c.)	I_C	max.	25	mA
Collector current (peak)	I_{CM}	max.	50	mA
Total power dissipation up to T_{amb} = 70 °C	P_{tot}	max.	200	mW
Storage temperature	T_{stg}	−65 to + 150		°C
Junction temperature	T_j	max.	150	°C

THERMAL RESISTANCE

From junction to ambient in free air mounted on a fibre-glass print (see Fig. 2) of 40 mm x 25 mm x 1 mm	$R_{th\ j\text{-}a}$	=	400	K/W

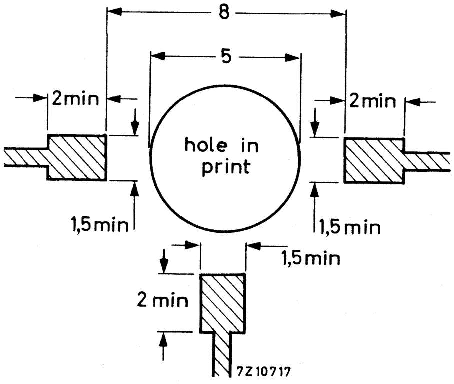

Fig. 2 Requirements for fibre-glass print (dimensions in mm).

CHARACTERISTICS

T_j = 25 °C unless otherwise specified

Collector cut-off current $I_E = 0$; V_{CB} = 10 V	I_{CBO}	max.	50	nA
D.C. current gain I_C = 2 mA; V_{CE} = 1 V	h_{FE}	min. max.	20 150	
I_C = 25 mA; V_{CE} = 1 V	h_{FE}	min.	20	

Transition frequency at f = 500 MHz I_C = 25 mA; V_{CE} = 5 V	f_T	typ.	2,8	GHz
Collector capacitance at f = 1 MHz I_E = 0; V_{CB} = 10 V	C_c	typ.	0,8	pF
Emitter capacitance at f = 1 MHz I_C = 0; V_{EB} = 0,5 V	C_e	typ.	1,4	pF
Feedback capacitance at f = 1 MHz I_C = 0; V_{CE} = 5 V	C_{re}	typ.	0,45	pF
Noise figure at f = 800 MHz and T_{amb} = 25 °C I_C = 2 mA; V_{CE} = 5 V; Z_S = 60 Ω	F	typ.	2,5	dB
Output voltage at d_{im} = –60 dB (see Fig. 3) I_C = 14 mA; V_{CE} = 10 V; R_L = 75 Ω; T_{amb} = 25 °C $V_p = V_o$ at d_{im} = –60 dB; f_p = 795,25 MHz $V_q = V_o$ –6 dB ; f_q = 803,25 MHz $V_r = V_o$ –6 dB ; f_r = 805,25 MHz Measured at $f_{(p+q-r)}$ = 793,25 MHz	V_o	typ.	150	mV
Maximum unilateral power gain at f = 800 MHz I_C = 14 mA; V_{CE} = 10 V; T_{amb} = 25 °C	G_{UM}	typ.	13	dB

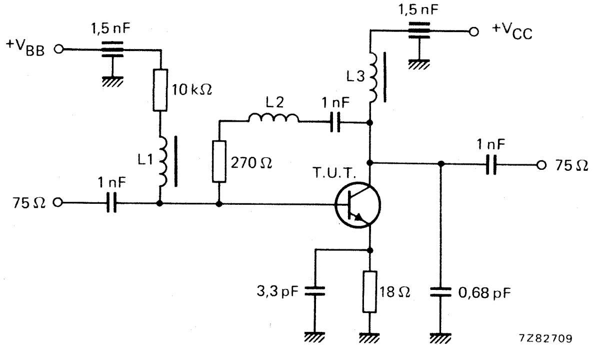

Fig. 3 Intermodulation distortion and second harmonic distortion MATV test circuit.

L1 = L3 = 5 μH microchoke
L2 = 3 turns Cu wire (0,4 mm); internal diameter 3 mm; winding pitch 1 mm

S-parameters (common emitter) at I_C = 14 mA; V_{CE} = 10 V; T_{amb} = 25 °C; typical values.

f MHz	s_{ie}	s_{re}	s_{fe}	s_{oe}
40	0,56/ –30°	0,01/76°	27,5/156°	0,94/ 10°
100	0,42/ –64°	0,02/69°	20,4/131°	0,81/–17°
200	0,28/–100°	0,03/68°	12,7/109°	0,70/–19°
500	0,18/–161°	0,05/74°	5,7/ 87°	0,63/–23°
800	0,18/+163°	0,08/75°	3,6/ 74°	0,63/–31°
1000	0,19/+145°	0,10/75°	2,9/ 66°	0,62/–36°

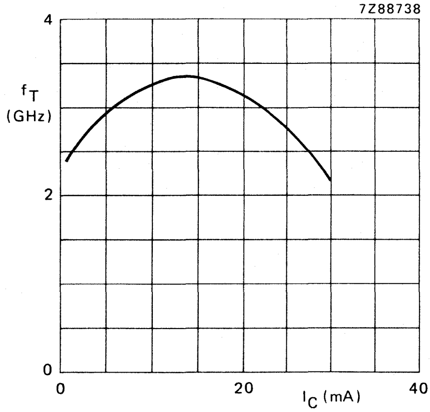

Fig. 4 $V_{CE} = 5$ V; f = 500 MHz; $T_j = 25$ °C; typical values.

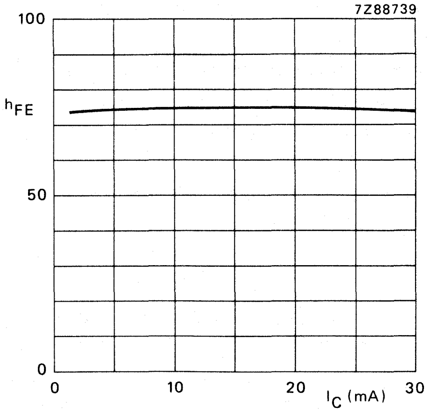

Fig. 5 $V_{CE} = 5$ V; $T_j = 25$ °C; typical values.

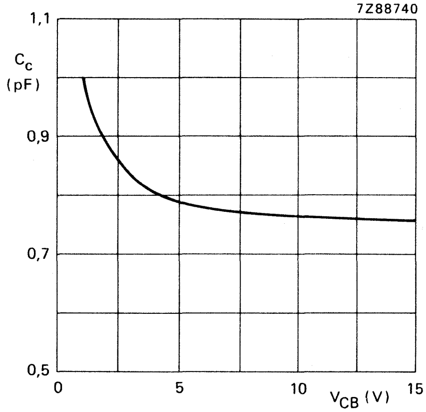

→ Fig. 6 $I_E = i_e = 0$; $T_j = 25$ °C; typical values.

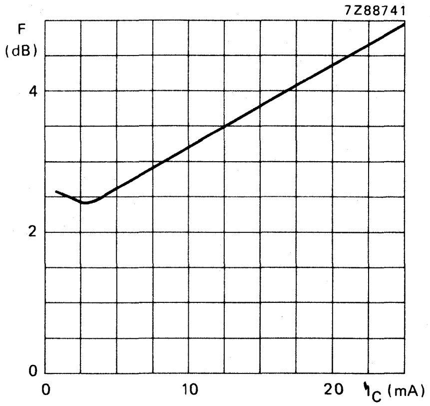

Fig. 7 $V_{CE} = 5$ V; $T_{amb} = 25$ °C; f = 800 MHz; $Z_S = 60\ \Omega$; typical values.

N-P-N H.F. WIDEBAND TRANSISTOR

N-P-N transistor in a plastic SOT-37 envelope.
The device is intended for use in v.h.f. - u.h.f. applications, primarily wideband aerial amplifiers 40 - 860 MHz.
It is intended for mounting on miniature printed-circuit boards.

QUICK REFERENCE DATA

Collector-base voltage (open emitter)	V_{CBO}	max.	18	V
Collector-emitter voltage (open base)	V_{CEO}	max.	10	V
Collector current (peak value; f > 1 MHz)	I_{CM}	max.	100	mA
Total power dissipation up to T_{amb} = 70 °C	P_{tot}	max.	200	mW
Junction temperature	T_j	max.	150	°C
Feedback capacitance at f = 1 MHz I_C = 2 mA; V_{CE} = 5 V	C_{re}	typ.	0,6	pF
Transition frequency at f = 500 MHz I_C = 50 mA; V_{CE} = 5 V	f_T	typ.	1,7	GHz
Max. unilateral power gain I_C = 30 mA; V_{CE} = 5 V; f = 200 MHz	G_{UM}	typ.	22	dB
I_C = 30 mA; V_{CE} = 5 V; f = 800 MHz	G_{UM}	typ.	10,5	dB
Intermodulation distortion at T_{amb} = 25 °C I_C = 30 mA; V_{CE} = 5 V; R_L = 37,5 Ω V_O = 100 mV at f_p = 183 MHz V_O = 100 mV at f_q = 200 MHz measured at $f_{(2q-p)}$ = 217 MHz	d_{im}	typ.	−60	dB

MECHANICAL DATA

Dimensions in mm

Fig. 1 SOT-37.

Connections

1. Base
2. Emitter
3. Collector

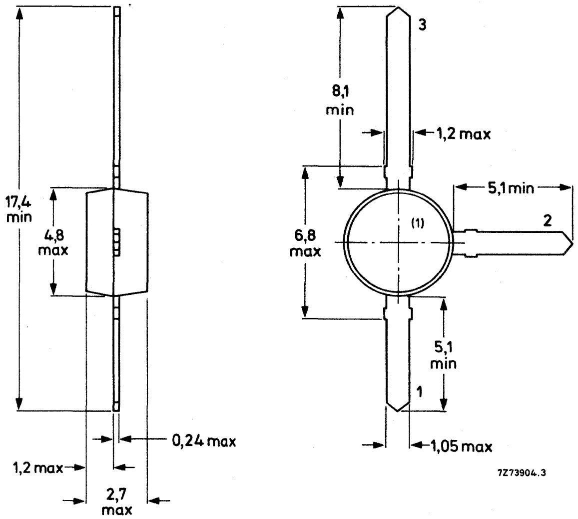

(1) = type number marking.

RATINGS

Limiting values in accordance with the Absolute Maximum System (IEC 134)

Collector-base voltage (open emitter)	V_{CBO}	max.	18	V
Collector-emitter voltage (open base)	V_{CEO}	max.	10	V
Emitter-base voltage (open collector)	V_{EBO}	max.	2,5	V
Collector current (d.c.)	I_C	max.	50	mA
Collector current (peak value; $f > 1$ MHz)	I_{CM}	max.	100	mA
Total power dissipation up to $T_{amb} = 70\ ^oC$	P_{tot}	max.	190	mW
Storage temperature	T_{stg}	−65 to +150		^oC
Junction temperature	T_j	max.	150	^oC

THERMAL RESISTANCE

From junction to ambient in free air mounted on a glass-fibre print of 40 mm x 25 mm x 1 mm (Fig. 2)	$R_{th\ j\text{-}a}$	=	400	K/W

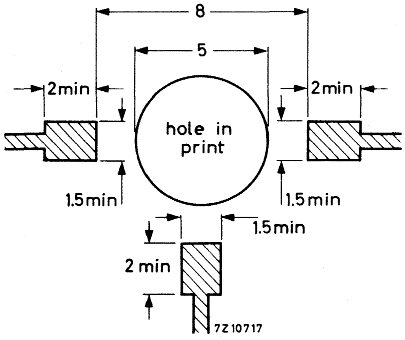

Fig. 2 Requirements for fibre-glass print (dimensions in mm).

CHARACTERISTICS

$T_j = 25\ ^oC$ unless otherwise specified

Collector cut-off current				
$I_E = 0$; $V_{CB} = 10$ V	I_{CBO}	max.	50	nA
→ D.C. current gain				
$I_C = 25$ mA; $V_{CE} = 5$ V	h_{FE}	min.	25	
$I_C = 50$ mA; $V_{CE} = 5$ V	h_{FE}	min.	25	
→ Transition frequency at f = 500 MHz				
$I_C = 50$ mA; $V_{CE} = 5$ V	f_T	typ.	1,7	GHz
Collector capacitance at f = 1 MHz				
$I_E = I_e = 0$; $V_{CB} = 5$ V	C_c	typ.	0,7	pF
Emitter capacitance at f = 1 MHz				
$I_C = I_c = 0$; $V_{EB} = 0,5$ V	C_e	typ.	1,5	pF

Feedback capacitance at f = 1 MHz I_C = 2 mA; V_{CE} = 5 V; T_{amb} = 25 °C	C_{re}	typ.	0,6 pF
Noise figure at f = 500 MHz I_C = 2 mA; V_{CE} = 5 V; G_S = 20 mS B_S is tuned; T_{amb} = 25 °C	F	max.	5,0 dB
Max. unilateral power gain (s_{re} assumed to be zero) $G_{UM} = 10 \log \frac{\lvert s_{fe}\rvert^2}{[1-\lvert s_{ie}\rvert^2]\,[1-\lvert s_{oe}\rvert^2]}$			
I_C = 30 mA; V_{CE} = 5 V; f = 200 MHz; T_{amb} = 25 °C	G_{UM}	typ.	22 dB
I_C = 30 mA; V_{CE} = 5 V; f = 800 MHz; T_{amb} = 25 °C	G_{UM}	typ.	10,5 dB
Intermodulation distortion at T_{amb} = 25 °C I_C = 30 mA; V_{CE} = 5 V; R_L = 37,5 Ω V_o = 100 mV at f_p = 183 MHz V_o = 100 mV at f_q = 200 MHz measured at $f_{(2q-p)}$ = 217 MHz	d_{im}	typ.	−60 dB

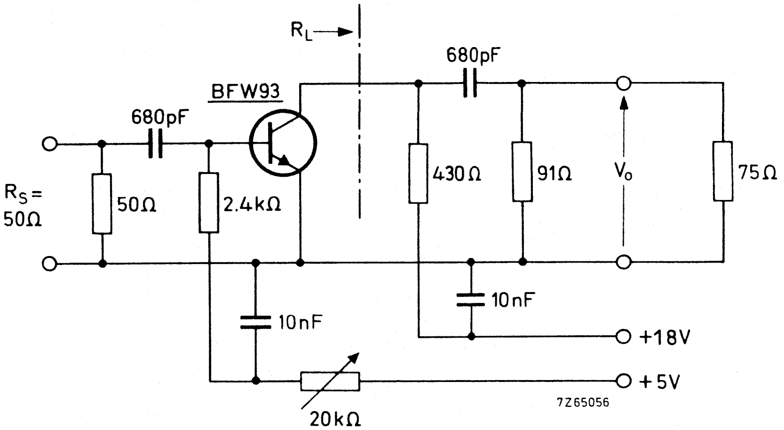

Fig. 3 Test circuit.

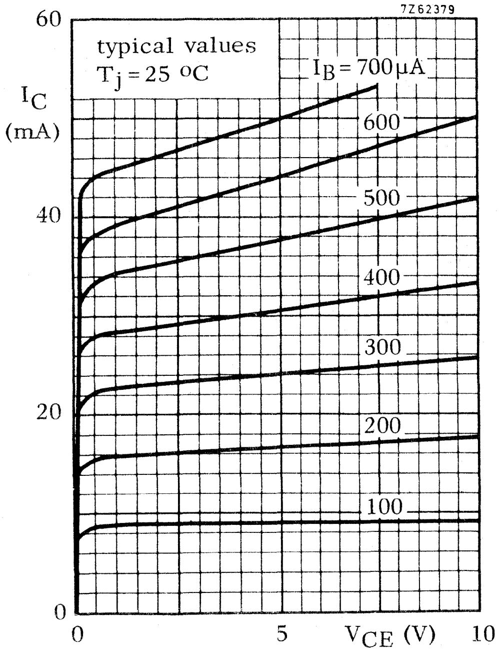

Fig. 4 T_j = 25 °C; typical values.

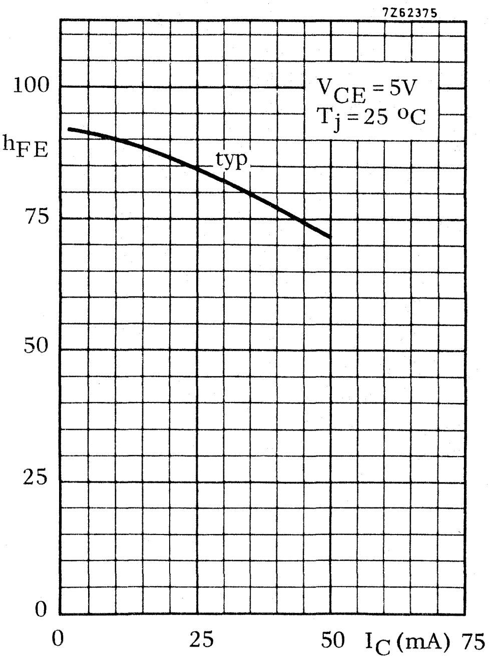

Fig. 5 V_{CE} = 5 V; T_j = 25 °C; typical values.

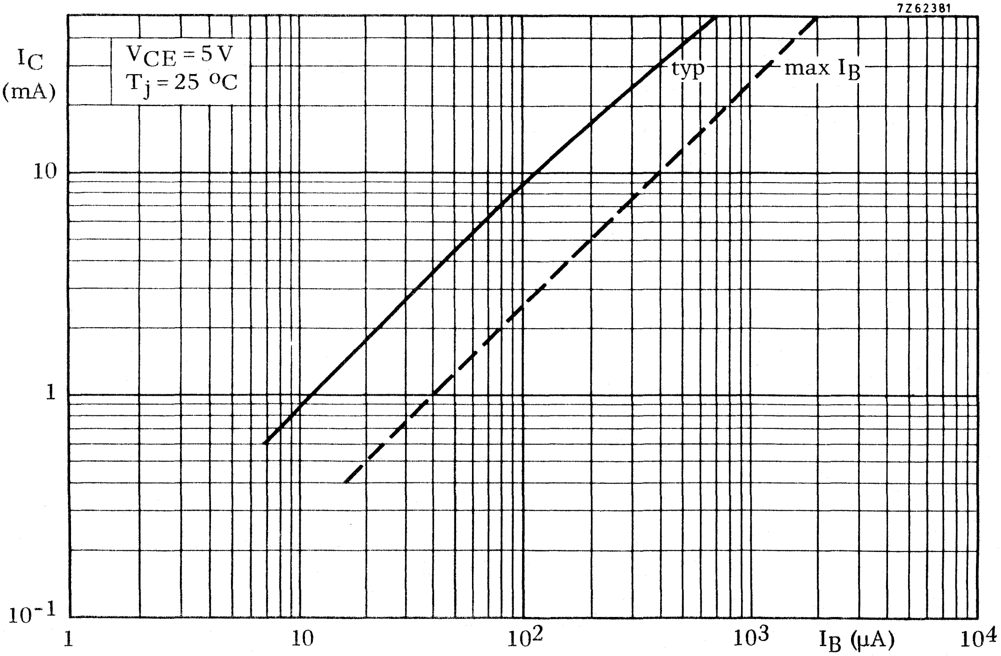

Fig. 6 V_{CE} = 5 V; T_j = 25 °C.

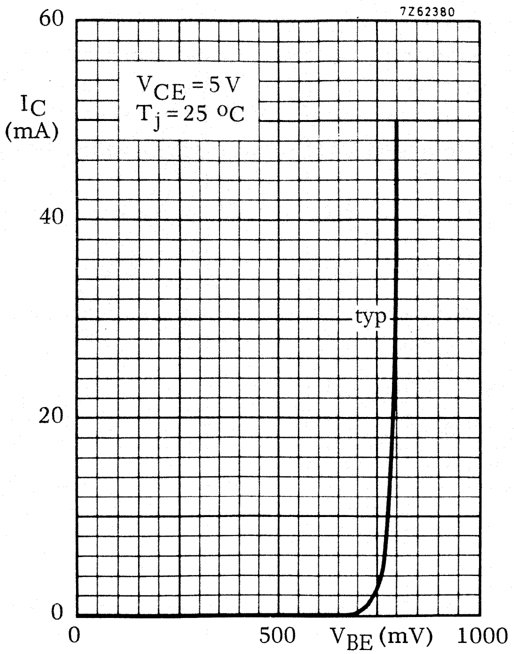

Fig. 7 $V_{CE} = 5$ V; $T_j = 25$ °C; typical values.

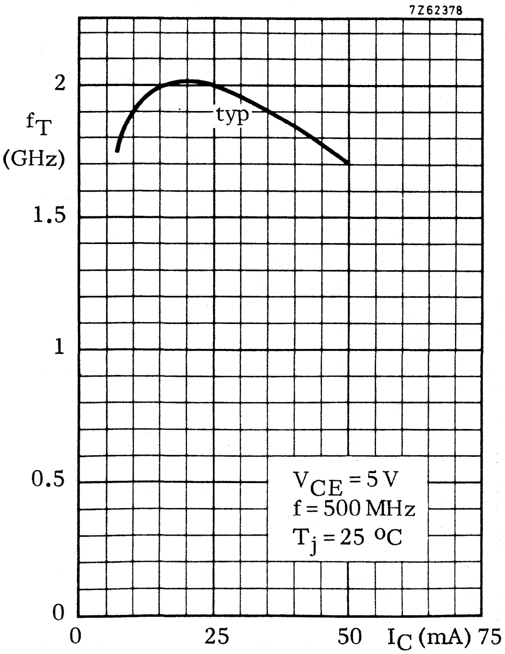

Fig. 8 $V_{CE} = 5$ V; f = 500 MHz; $T_j = 25$ °C; typical values.

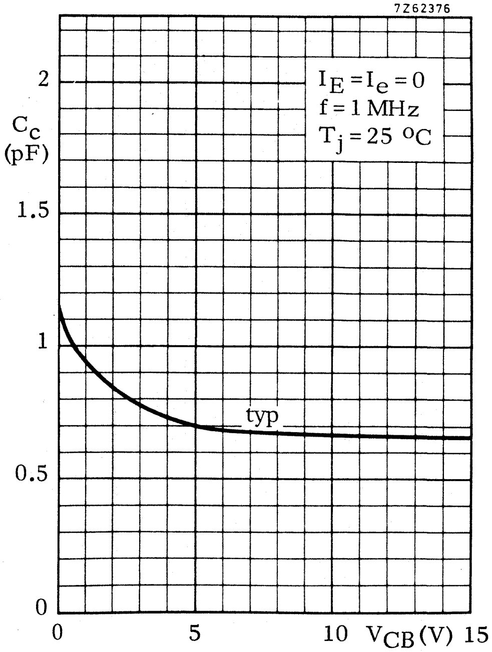

Fig. 9 $I_E = i_e = 0$; f = 1 MHz; $T_j = 25$ °C; typical values.

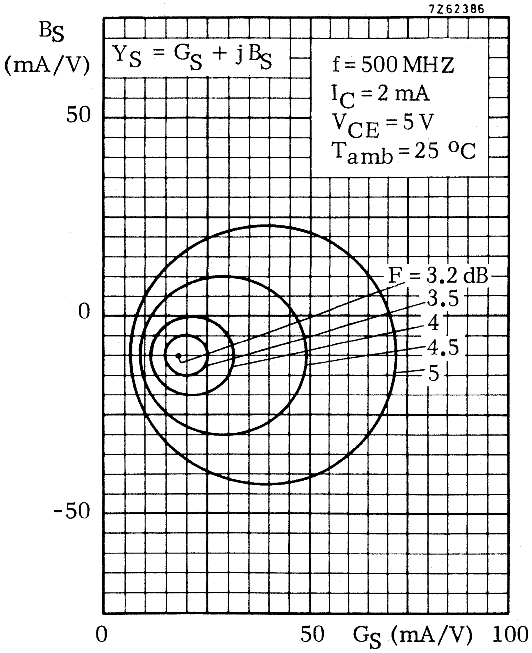

Fig. 10 V_{CE} = 5 V; I_C = 2 mA; f = 500 MHz; T_{amb} = 25 °C; typical values.

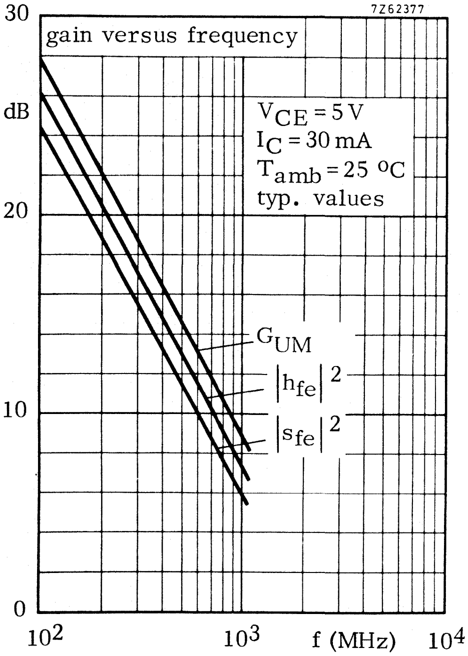

Fig. 11 V_{CE} = 5 V; I_C = 30 mA; T_{amb} = 25 °C; typical values.

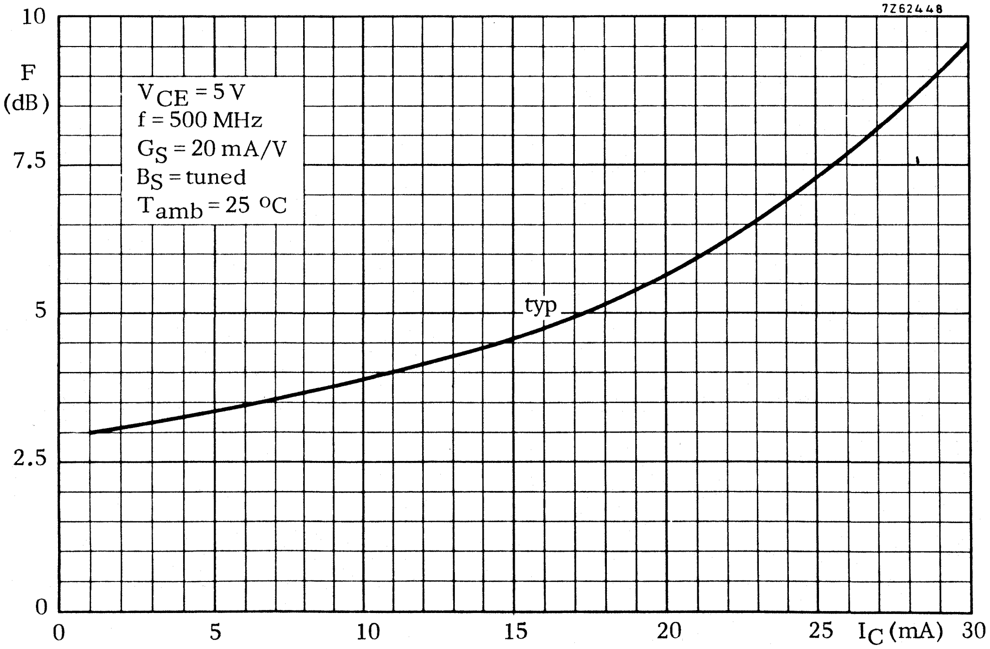

Fig. 12 V_{CE} = 5 V; f = 500 MHz; G_S = 20 mS; B_S = tuned; T_{amb} = 25 °C; typical values.

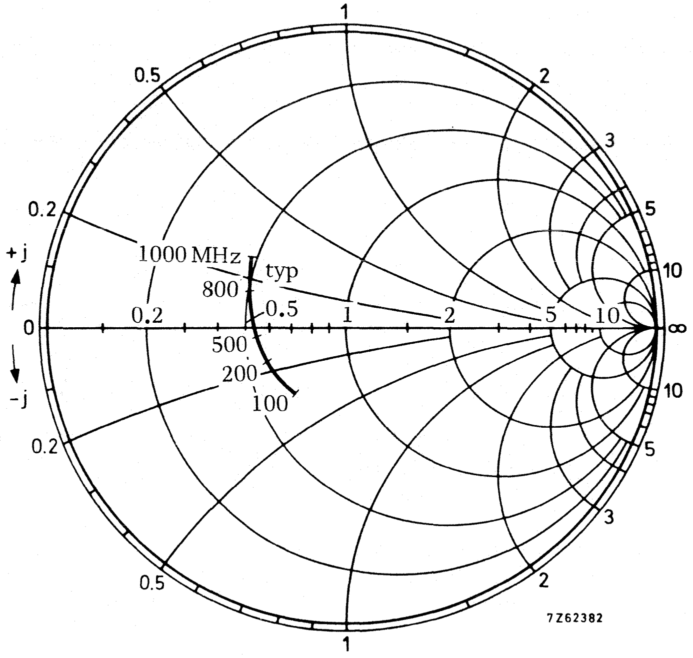

Fig. 13 V_{CE} = 5 V; I_C = 30 mA; T_{amb} = 25 °C; typical values.

Input impedance derived from input reflection coefficient s_{ie} coordinates in ohm x 50

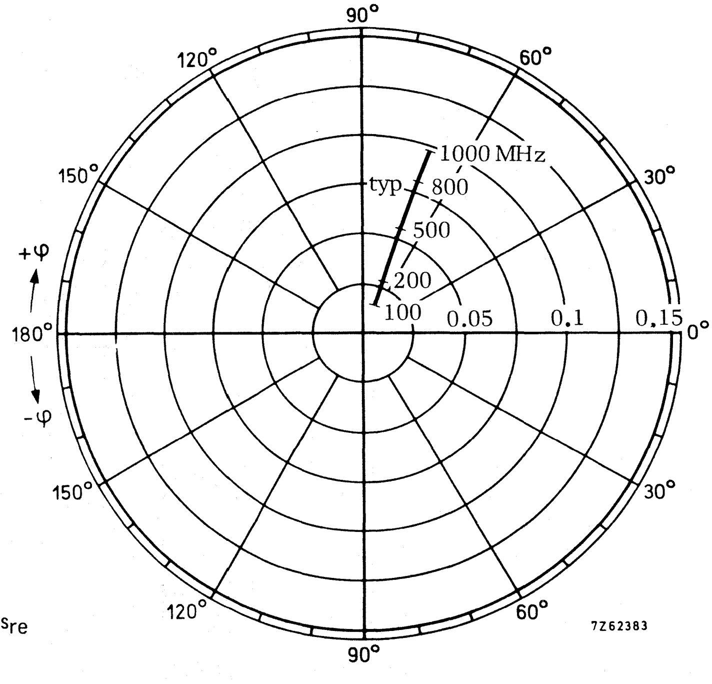

Fig. 14 V_{CE} = 5 V; I_C = 30 mA; T_{amb} = 25 °C; typical values.

Reverse transmission coefficient s_{re}

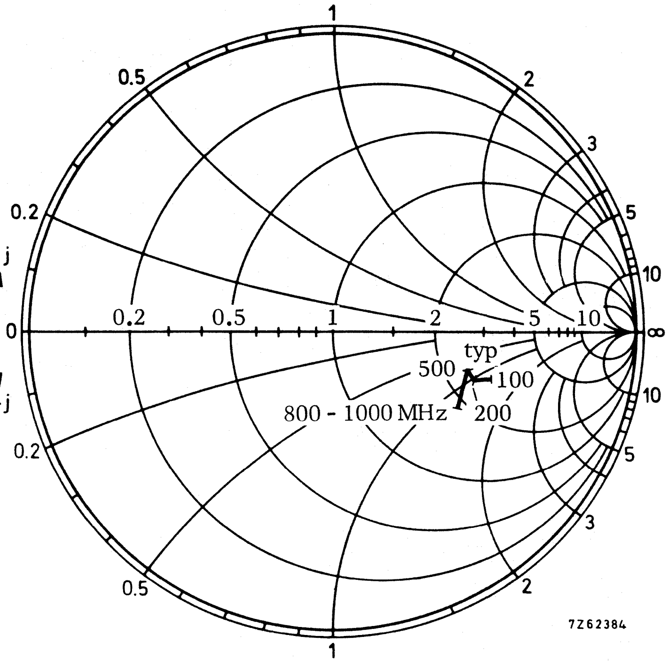

Fig. 15 V_{CE} = 5 V; I_C = 30 mA; T_{amb} = 25 °C; typical values.

Output impedance derived from output reflection coefficient s_{oe} coordinates in ohm x 50

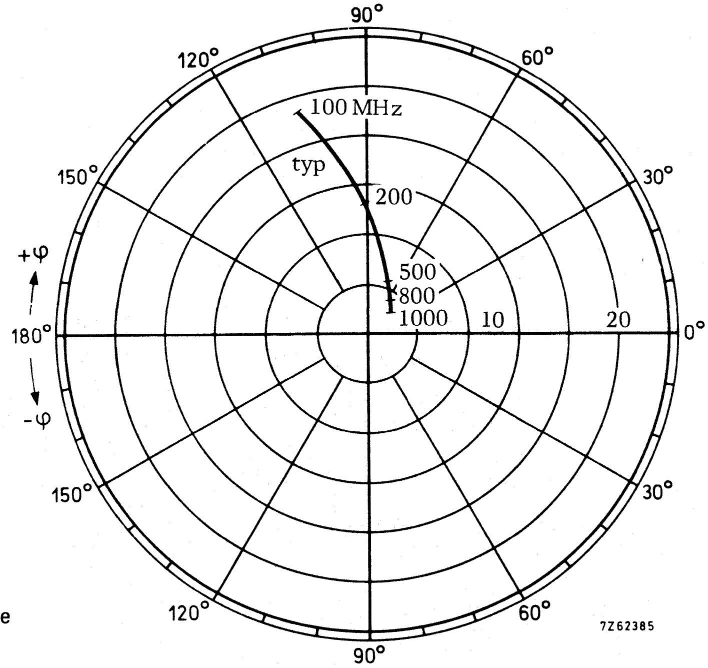

Fig. 16 V_{CE} = 5 V; I_C = 30 mA; T_{amb} = 25 °C; typical values.

Forward transmission coefficient s_{fe}

N-P-N H.F. WIDEBAND TRANSISTOR ←

N-P-N transistor in a TO-72 metal envelope, with insulated electrodes and a shield lead connected to the case. The transistor has a low noise, a very high power gain and good intermodulation properties. It is primarily intended for:

- Channel aerial amplifiers for bands I, II, III and IV/V (40–860 MHz).
- Wideband aerial amplifiers (40–860 MHz).

QUICK REFERENCE DATA

Collector-base voltage (open emitter; peak value)	V_{CBOM}	max.		30	V
Collector-emitter voltage (open base)	V_{CEO}	max.		15	V
Collector current (peak value; f > 1 MHz)	I_{CM}	max.		50	mA
Total power dissipation up to T_{amb} = 25 °C	P_{tot}	max.		200	mW
Junction temperature	T_j	max.		200	°C
Transition frequency I_C = 25 mA; V_{CE} = 5 V; f = 500 MHz	f_T	typ.		1,2	GHz
Feedback capacitance I_C = 2 mA; V_{CE} = 5 V; f = 1 MHz	C_{re}	typ.		0,6	pF
			f = 200	800	MHz
Noise figure at optimum source impedance I_C = 2 mA; V_{CE} = 5 V	F	typ.	3,3	7	dB
Power gain (not neutralized) I_C = 8 mA; V_{CE} = 10 V	G_p	typ.	22	7	dB
Output power d_{im} = −30 dB; VSWR at output < 2; I_C = 8 mA; V_{CE} = 10 V	P_o	typ.	6	6	mW

MECHANICAL DATA

Dimensions in mm

Fig. 1 TO-72.

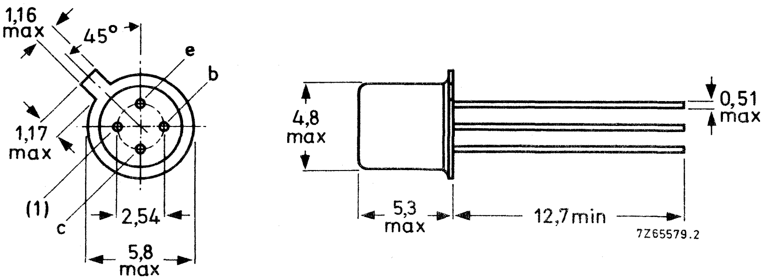

(1) = shield lead (connected to case).

Accessories: 56246 (distance disc).

RATINGS

Limiting values in accordance with the Absolute Maximum System (IEC 134)

Collector-base voltage (open emitter; peak value)	V_{CBOM}	max.	30	V
→ Collector-emitter voltage (peak value) $R_{BE} \leqslant 50\ \Omega$	V_{CERM}	max.	30	V
→ Collector-emitter voltage (open base)	V_{CEO}	max.	15	V
Emitter-base voltage (open collector)	V_{EBO}	max.	2,5	V
Collector current (d.c.)	I_C	max.	25	mA
Collector current (peak value; $f > 1$ MHz)	I_{CM}	max.	50	mA
Total power dissipation up to $T_{amb} = 25\ ^{o}C$	P_{tot}	max.	200	mW
Storage temperature	T_{stg}	−65 to +	200	°C
Junction temperature	T_j	max.	200	°C

THERMAL RESISTANCE

From junction to ambient in free air	$R_{th\ j\text{-}a}$	=	880	K/W
From junction to case	$R_{th\ j\text{-}c}$	=	580	K/W

CHARACTERISTICS

T_j = 25 °C unless otherwise specified

Collector cut-off current				
$I_E = 0$; $V_{CB} = 15$ V	I_{CBO}	max.	10 nA	
Knee voltage				
$I_C = 20$ mA; I_B = value for which $I_C = 22$ mA at $V_{CE} = 1$ V	V_{CEK}	max.	0,75 V	

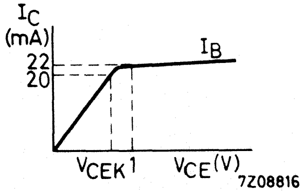

Fig. 2.

D.C. current gain				
$I_C = 2$ mA; $V_{CE} = 1$ V	h_{FE}		20 to 150	
$I_C = 25$ mA; $V_{CE} = 1$ V	h_{FE}		20 to 125	
Transition frequency*				
$I_C = 2$ mA; $V_{CE} = 5$ V; f = 500 MHz	f_T	typ.	1,0 GHz	
$I_C = 25$ mA; $V_{CE} = 5$ V; f = 500 MHz	f_T	typ.	1,2 GHz	
Collector capacitance at f = 1 MHz**				
$I_E = I_e = 0$; $V_{CB} = 10$ V	C_c	max.	1,7 pF	
Feedback capacitance at f = 1 MHz*				
$I_C = 2$ mA; $V_{CE} = 5$ V; $T_{amb} = 25$ °C	C_{re}	typ.	0,6 pF	←
Noise figure*				
$I_C = 2$ mA; $V_{CE} = 5$ V; $T_{amb} = 25$ °C				←
f = 200 MHz; optimum source impedance	F	max.	4,0 dB	
f = 500 MHz; $Z_S = 50\ \Omega$	F	max.	6,5 dB	←
f = 800 MHz; optimum source impedance	F	typ.	7,0 dB	

Power gain (not neutralized)*			f = 200	800 MHz
$I_C = 8$ mA; $V_{CE} = 10$ V; $T_{amb} = 25$ °C	G_p	min.	19	– dB
		typ.	22	7,0 dB

---

* Shield lead grounded.

** Shield lead not connected.

CHARACTERISTICS (continued)

Intermodulation characteristics*

1. Output power at f = 200 MHz; T_{amb} = 25 °C
   I_C = 8 mA; V_{CE} = 10 V; V.S.W.R. at output < 2
   f_p = 202 MHz; f_q = 205 MHz; d_{im} = −30 dB
   measured at $f_{(2q-p)}$ = 208 MHz (Channel 9) P_o typ. 6 mW

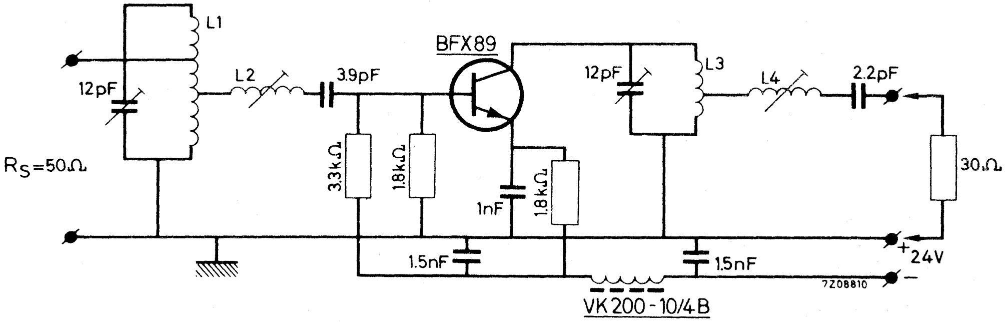

Fig. 3 Test circuit.

Coil data:

L1 = 3 turns silver plated Cu wire (1,4 mm); winding pitch 2,7 mm; int. diam. 8 mm; taps at 0,5 turn and 1,5 turns from earth.
L2 = 5,5 turns silver plated Cu wire (1,4 mm); winding pitch 2,2 mm; int. diam. 8 mm.
L3 = 3 turns silver plated Cu wire (1,4 mm); winding pitch 3,3 mm; int. diam. 8 mm.
L4 = 5,5 turns silver plated Cu wire (1,4 mm); winding pitch 2,2 mm; int. diam. 11 mm.

---

* Shield lead grounded.

CHARACTERISTICS

Basis of adjustment

The intermodulation at an intermodulation distortion of –30 dB is caused by h.f. output current – voltage clipping.
The maximum undistorted output power is realised, if

a. Current and voltage clipping take place concurrently.
   This occurs if

$$R_L = \frac{V_{CE} - V_{CEK}}{I_C},$$

   in which V_{CEK} is the high frequency knee voltage.

b. The h.f. collector current is as small as possible.
   This is so if $-C_L = +C_{oe}$,
   in which C_{oe} is the output capacitance of the transistor at short circuited input.

For maximum output power at an intermodulation distortion of –30 dB, the (experimentally found) values of R_L and C_L are:
$R_L = 1\ \text{k}\Omega$; $C_L = -1{,}8\ \text{pF}$

Adjustment procedure

1. Remove the transistor and connect a dummy consisting of a 1 kΩ resistor in parallel with a 1,8 pF capacitor between the collector and emitter connections of the output circuit.
2. Tune and match the output circuit for zero reflection at 205 MHz (V.S.W.R. = 1). After this adjustment, no further change may be made in the output circuit.
3. Replace the dummy by the transistor. Tune and match the input circuit for maximum power gain and good band pass curve.
   The V.S.W.R. of the output will then, in most cases, be $\leqslant 2$ over the whole channel.
   Corrections can be made by tuning L2; this will not disturb the band pass curve.

CHARACTERISTICS (continued)

Intermodulation characteristics*

2. Output power at f = 800 MHz; T_{amb} = 25 °C
I_C = 8 mA; V_{CE} = 10 V; V.S.W.R. at output < 2
f_p = 798 MHz; f_q = 802 MHz; d_{im} = −30 dB
measured at $f_{(2q-p)}$ = 806 MHz (Channel 62) P_o typ. 6 mW

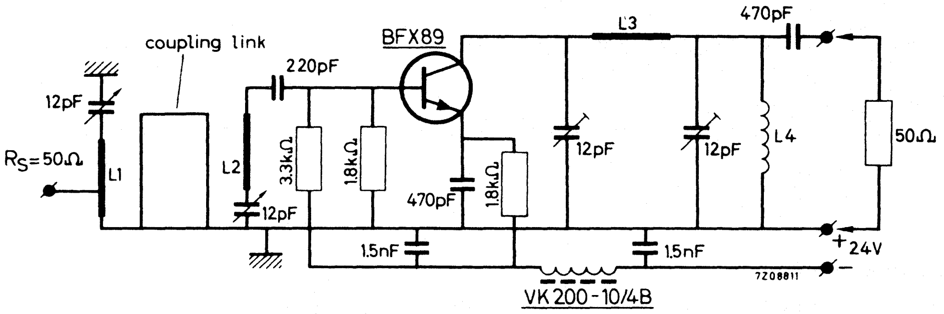

Fig. 4 Test circuit.

Coil data:

L1 = 24 mm x 6 mm x 0,5 mm silver plated Cu strip.
Tap of the input at 5 mm from earth.
L2 = 15 mm x 6 mm x 0,5 mm silver plated Cu strip.
L3 = 20 mm x 8 mm x 0,5 mm silver plated Cu strip.
L4 = 4 turns enamelled Cu wire (0,5 mm); winding pitch 1,5 mm; int. diam. 4 mm.
Coupling link: 42 mm silver plated Cu wire (1 mm).

Basis of adjustment

At 800 MHz no dummy can be used to adjust for optimum collector load because at these frequencies the impedance transformations of a dummy are too high. A small signal at the mid-channel frequency of 802 MHz is fed to the input and increased until clipping occurs; that is, until the output power no longer increases linearily with the input signal. This clipping can be eliminated by tuning the output circuit, thereby making the output power equal to

$$P_o = \frac{I_C (V_{CE} - V_{CEK})}{2} = 35 \text{ mW}$$

The output circuit is adjusted for minimum intermodulation if the input signal is as small as possible at P_o = 35 mW.
After this adjustment has been made no further change may be made in the output circuit.
Adjust the input circuit for maximum power gain and good band pass curve.
The V.S.W.R. of the output is then $\leqslant 2$ over the whole channel.

---

* Shield lead grounded.

CHARACTERISTICS

Intermodulation characteristics*

3. Intermodulation distortion
$I_C = 8$ mA; $V_{CE} = 6$ V; $R_L = 37{,}5\ \Omega$; $T_{amb} = 25\ ^{o}C$
$V_o = 100$ mV at $f_p = 183$ MHz
$V_o = 100$ mV at $f_q = 200$ MHz
measured at $f_{(2q-p)} = 217$ MHz $\quad d_{im} \quad$ typ. -40 dB

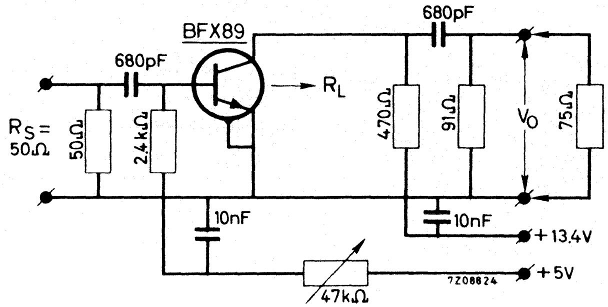

Fig. 5 Test circuit.

---

* Shield lead grounded.

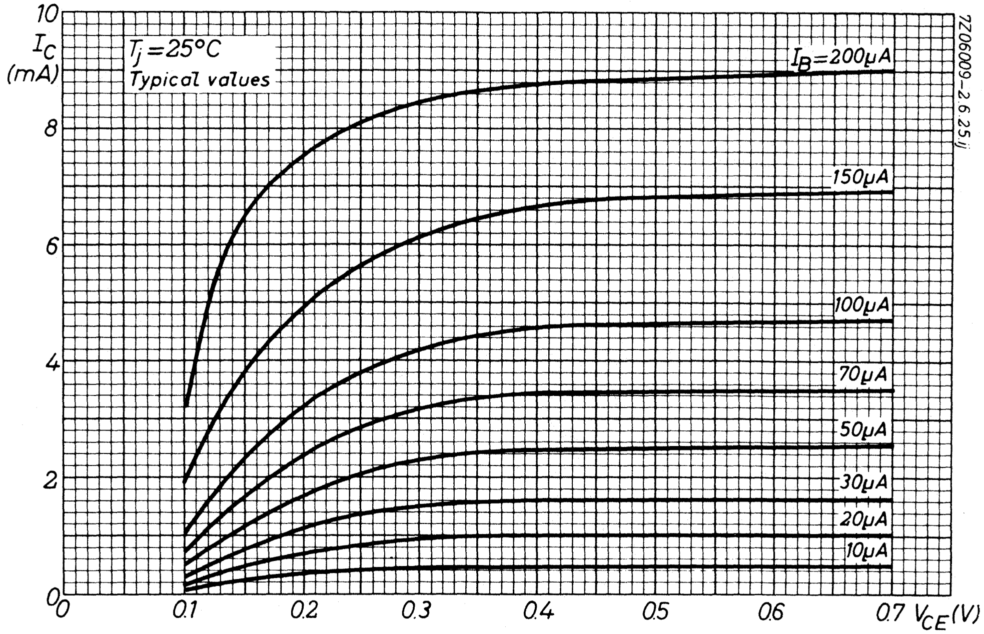

Fig. 6 T_j = 25 °C; typical values.

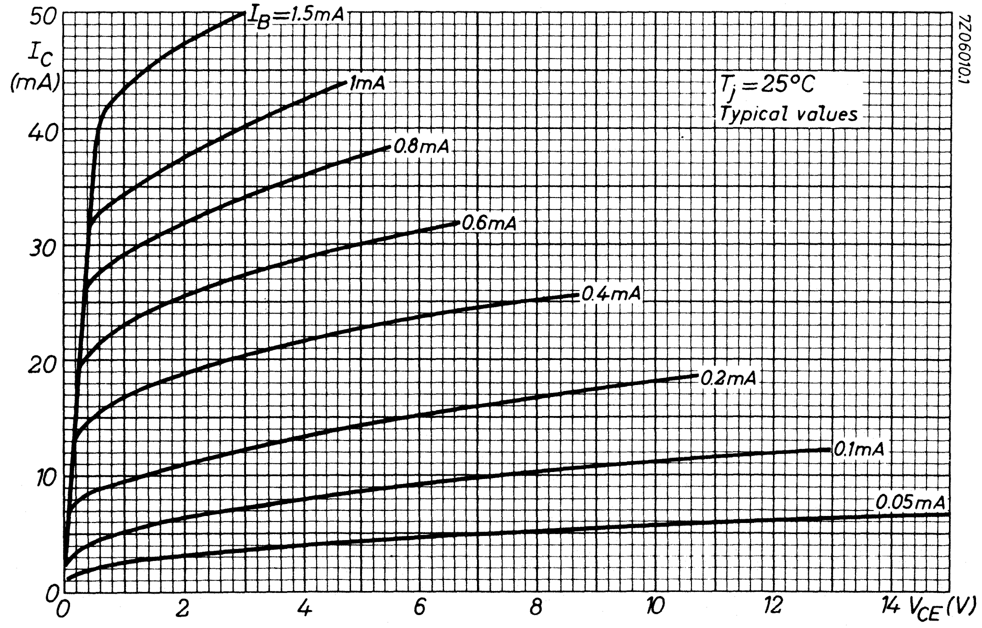

Fig. 7 T_j = 25 °C; typical values.

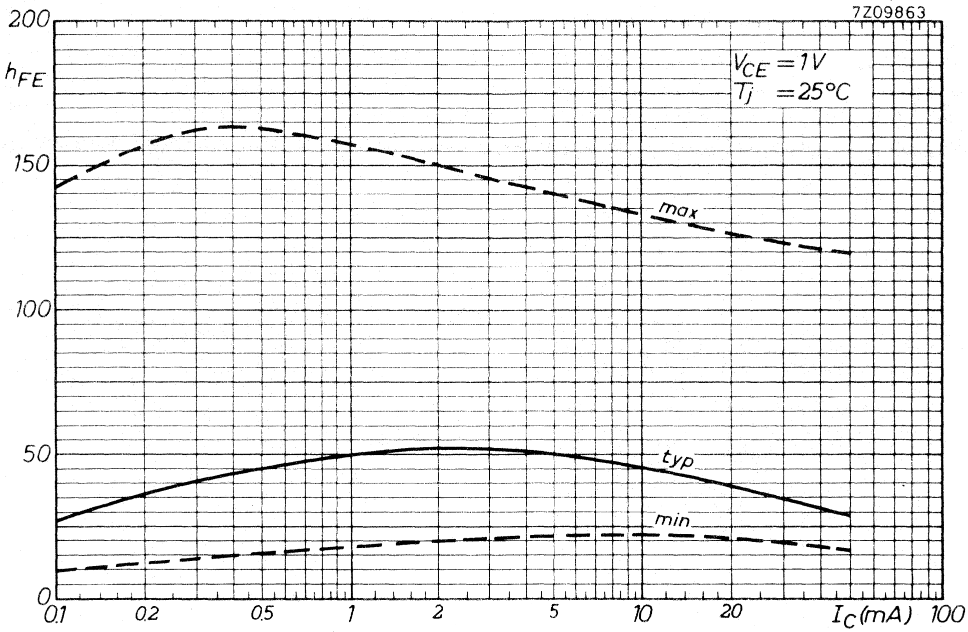

Fig. 8 V_{CE} = 1 V; T_j = 25 °C.

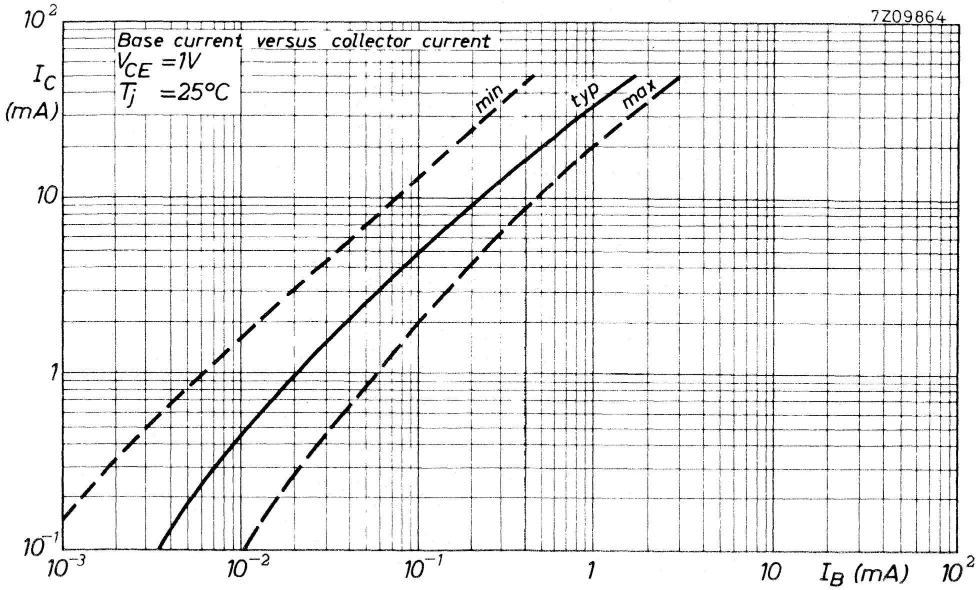

Fig. 9 V_{CE} = 1 V; T_j = 25 °C.

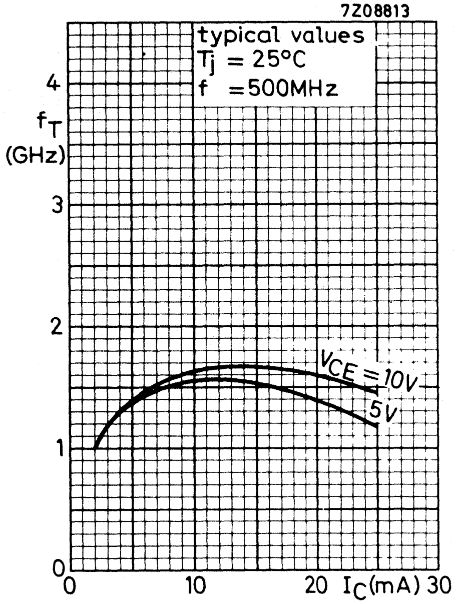

Fig. 10 f = 500 MHz; T_j = 25 °C; typical values.

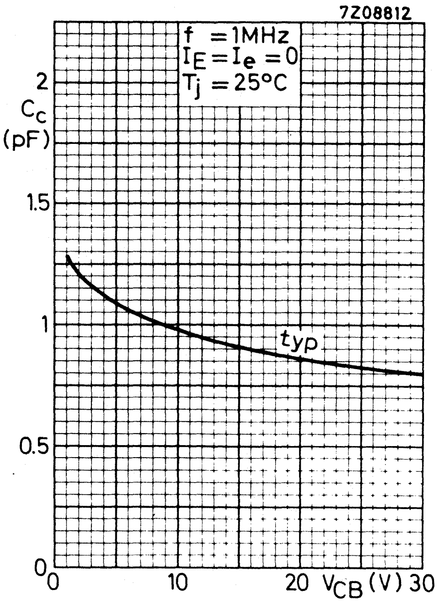

Fig. 11 $I_E = i_e = 0$; f = 1 MHz; T_j = 25 °C; typical values.

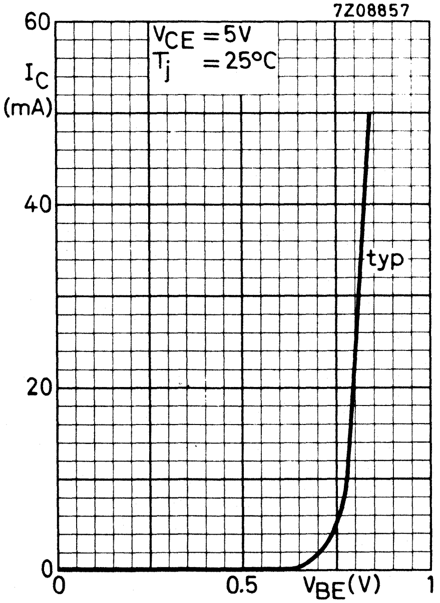

Fig. 12 V_{CE} = 5 V; T_j = 25 °C; typical values.

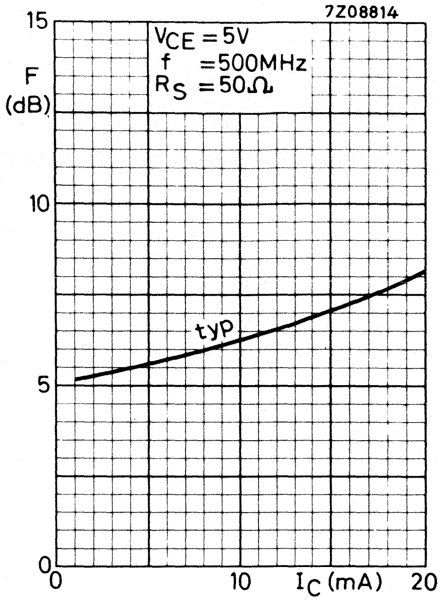

Fig. 13 V_{CE} = 5 V; f = 500 MHz; Z_S = 50 Ω; T_{amb} = 25 °C; typical values.

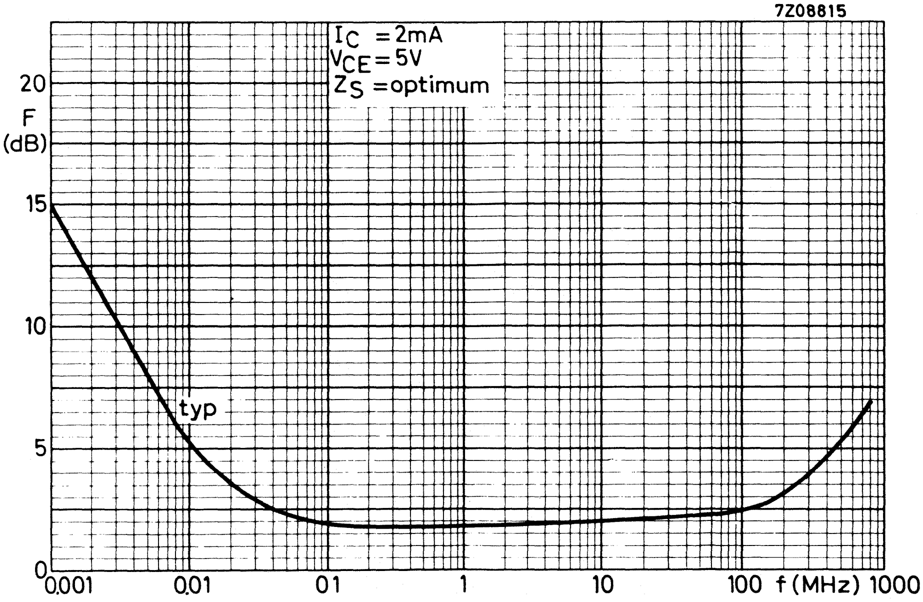

Fig. 14 V_{CE} = 5 V; I_C = 2 mA; Z_S = opt.; T_{amb} = 25 °C; typical values.

N-P-N H.F. WIDEBAND TRANSISTOR

N-P-N transistor in a TO-72 metal envelope with insulated electrodes and a shield lead connected to the case.

The transistor has very low noise over a wide current range, a very high power gain and excellent intermodulation properties.

It is primarily intended for:

- Channel- and band aerial amplifiers for band I, II, III and IV/V (40-860 MHz)
- Wide band aerial amplifiers (40-860 MHz)
- Television distribution amplifiers
- Low noise wide band vertical amplifier in high speed oscilloscopes

It is also suitable for military- and industrial applications, such as:

- R.F. amplifiers and mixers for communication equipment
- Microwave telephony link systems, wide band i.f. amplifiers
- Large bandwidth radar i.f. amplifiers

QUICK REFERENCE DATA

Collector-base voltage (open emitter; peak value)	V_{CBOM}	max.	30	V
Collector-emitter voltage (open base)	V_{CEO}	max.	15	V
Collector current (peak value; f > 1 MHz)	I_{CM}	max.	50	mA
Total power dissipation up to T_{amb} = 25 °C	P_{tot}	max.	200	mW
Junction temperature	T_j	max.	200	°C
Transition frequency I_C = 25 mA; V_{CE} = 5 V; f = 500 MHz	f_T	typ.	1,4	GHz
Feedback capacitance at f = 1 MHz I_C = 2 mA; V_{CE} = 5 V	C_{re}	typ.	0,6	pF
Noise figure at optimum source impedance I_C = 2 mA; V_{CE} = 5 V				
f = 200 MHz	F	typ.	2,5	dB
f = 800 MHz		typ.	5,5	dB
Power gain (not neutralized) I_C = 14 mA; V_{CE} = 10 V				
f = 200 MHz	G_p	typ.	23	dB
f = 800 MHz		typ.	8	dB
Output power d_{im} = −30 dB; V.S.W.R. at output < 2 I_C = 14 mA; V_{CE} = 10 V				
f = 200 MHz	P_o	typ.	12	mW
f = 800 MHz		typ.	12	mW

MECHANICAL DATA (see next page)

MECHANICAL DATA

Dimensions in mm

Fig. 1 TO-72.

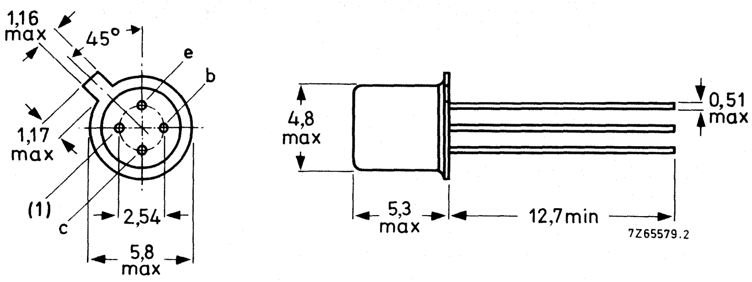

(1) = shield lead (connected to case).

Accessories: 56246 (distance disc).

RATINGS

Limiting values in accordance with the Absolute Maximum System (IEC 134)

Collector-base voltage (open emitter; peak value)	V_{CBOM}	max.	30	V
Collector-emitter voltage (peak value) $R_{BE} \leqslant 50\ \Omega$; $I_C = 10$ mA	V_{CERM}	max.	30	V
Collector-emitter voltage (open base); $I_C = 10$ mA	V_{CEO}	max.	15	V
Emitter-base voltage (open collector)	V_{EBO}	max.	2,5	V
Collector current (d.c.)	I_C	max.	25	mA
Collector current (peak value; $f > 1$ MHz)	I_{CM}	max.	50	mA
Total power dissipation up to $T_{amb} = 25\ ^oC$	P_{tot}	max.	200	mW
Storage temperature	T_{stg}	−65 to + 200		^oC
Junction temperature	T_j	max.	200	^oC

THERMAL RESISTANCE

From junction to ambient in free air	$R_{th\ j\text{-}a}$	=	880	K/W
From junction to case	$R_{th\ j\text{-}c}$	=	580	K/W

CHARACTERISTICS

T_j = 25 °C unless otherwise specified

Collector cut-off current $I_E = 0$; $V_{CB} = 15$ V	I_{CBO}	min.	10 nA	
Knee voltage $I_C = 20$ mA; I_B = value for which $I_C = 22$ mA at $V_{CE} = 1$ V	V_{CEK}	min.	0,75 V	

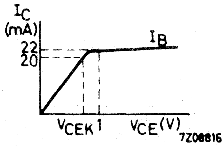

Fig. 2.

D.C. current gain				
$I_C = 2$ mA; $V_{CE} = 1$ V	h_{FE}		25 to 150	
$I_C = 25$ mA; $V_{CE} = 1$ V	h_{FE}		20 to 125	
Transition frequency*				
$I_C = 2$ mA; $V_{CE} = 5$ V; f = 500 MHz	f_T	min. typ.	1,0 GHz 1,1 GHz	
$I_C = 25$ mA; $V_{CE} = 5$ V; f = 500 MHz	f_T	min. typ.	1,3 GHz 1,4 GHz	
Collector capacitance at f = 1 MHz**				
$I_E = I_e = 0$; $V_{CB} = 10$ V	C_c	max.	1,5 pF	
Feedback capacitance at f = 1 MHz*				
$I_C = 2$ mA; $V_{CE} = 5$ V; $T_{amb} = 25$ °C	C_{re}	typ. max.	0,6 pF 0,8 pF	←
Noise figure*				
$I_C = 2$ mA; $V_{CE} = 5$ V; $T_{amb} = 25$ °C				←
f = 100 kHz; optimum source resistance	F	max.	4 dB	
f = 200 MHz; optimum source impedance	F	max.	3,5 dB	
f = 500 MHz; $Z_S = 50\ \Omega$	F	max.	5 dB	←
f = 800 MHz; optimum source impedance	F	typ.	5,5 dB	
Power gain (not neutralized)*				
$I_C = 14$ mA; $V_{CE} = 10$ V; $T_{amb} = 25$ °C				
f = 200 MHz	G_p	min. typ.	21 dB 23 dB	
f = 800 MHz	G_p	typ.	8 dB	

---

* Shield lead grounded.

** Shield lead not connected.

CHARACTERISTICS (continued)

Intermodulation characteristics*

1. Output power at f = 200 MHz; T_{amb} = 25 °C I_C = 14 mA; V_{CE} = 10 V; V.S.W.R. at output < 2 f_p = 202 MHz; f_q = 205 MHz; d_{im} = −30 dB measured at $f_{(2q-p)}$ = 208 MHz (Channel 9)	P_o	min. typ.	10 mW 12 mW

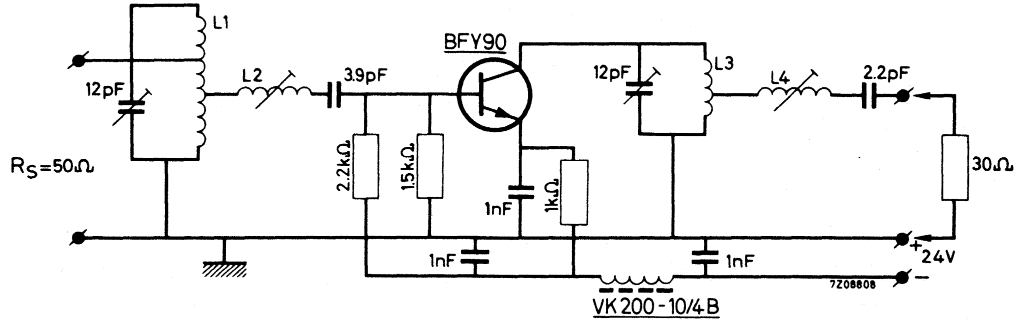

Fig. 3 Test circuit.

Coil data:

L1 = 3 turns silver plated Cu wire (1,4 mm); winding pitch 2,7 mm; int. diam. 8 mm; taps at 0,5 turn and 1,5 turns from earth.
L2 = 5,5 turns silver plated Cu wire (1,4 mm); winding pitch 2,2 mm; int. diam. 8 mm.
L3 = 3 turns silver plated Cu wire (1,4 mm); winding pitch 3,3 mm; int. diam. 8 mm.
L4 = 5,5 turns silver plated Cu wire (1,4 mm); winding pitch 2,2 mm; int. diam. 11 mm.

---

* Shield lead grounded.

CHARACTERISTICS

Basis of adjustment

The intermodulation at an intermodulation distortion of −30 dB is caused by h.f. output current – voltage clipping.
The maximum undistorted output power is realised, if

a. Current and voltage clipping take place concurrently.
This occurs if

$$R_L = \frac{V_{CE} - V_{CEK}}{I_C},$$

in which V_{CEK} is the high frequency knee voltage.

b. The h.f. collector current is as small as possible.
This is so if $-C_L = +C_{oe}$,
in which C_{oe} is the output capacitance of the transistor at short circuited input.

For maximum output power at an intermodulation distortion of −30 dB, the (experimentally found) values of R_L and C_L are:
$R_L = 560\ \Omega$; $C_L = -1{,}8$ pF

Adjustment procedure

1. Remove the transistor and connect a dummy consisting of a 560 Ω resistor in parallel with a 1,8 pF capacitor between the collector and emitter connections of the output circuit.
2. Tune and match the output circuit for zero reflection at 205 MHz (V.S.W.R. = 1). After this adjustment, no further change may be made in the output circuit.
3. Replace the dummy by the transistor. Tune and match the input circuit for maximum power gain and good band pass curve.
The V.S.W.R. of the output will then, in most cases, be ⩽ 2 over the whole channel.
Corrections can be made by tuning L2; this will not disturb the band pass curve.

CHARACTERISTICS (continued)

Intermodulation characteristics*

2. Output power at f = 800 MHz; T_{amb} = 25 °C
   I_C = 14 MHz; V_{CE} = 10 V; V.S.W.R. at output < 2
   f_p = 798 MHz; f_q = 802 MHz; d_{im} = −30 dB
   measured at $f_{(2q-p)}$ = 806 MHz (Channel 62) P_o typ. 12 mW

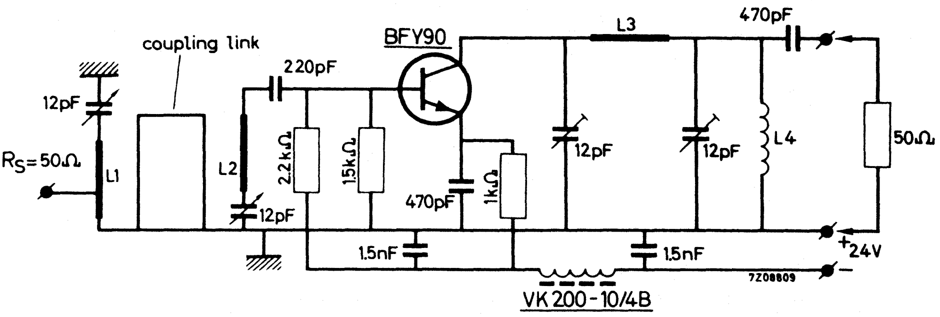

Fig. 4 Test circuit.

Coil data:

L1 = 24 mm x 6 mm x 0,5 mm silver plated Cu strip.
Tap of the input at 5 mm from earth.
L2 = 15 mm x 6 mm x 0,5 mm silver plated Cu strip.
L3 = 20 mm x 8 mm x 0,5 mm silver plated Cu strip.
L4 = 4 turns enamelled Cu wire (0,5 mm); winding pitch 1,5 mm; int. diam. 4 mm.
Coupling link: 42 mm silver plated Cu wire (1 mm).

Basis of adjustment

At 800 MHz no dummy can be used for optimum collector load because at these frequencies the impedance transformations of a dummy are too high. A small signal at the mid-channel frequency of 802 MHz is fed to the input and increased until clipping occurs; that is, until the output power no longer increases linearily with the input signal. This clipping can be eliminated by tuning the output circuit, thereby making the output power equal to

$$P_o = \frac{I_C\,(V_{CE} - V_{CEK})}{2} = 60 \text{ mW}$$

The output circuit is adjusted for minimum intermodulation if the input signal is as small as possible at P_o = 60 mW.
After this adjustment has been made no further change may be made in the output circuit.
Adjust the input circuit for maximum power gain and good band pass curve.
The V.S.W.R. of the output is then $\leqslant 2$ over the whole channel.

---

* Shield lead grounded.

CHARACTERISTICS

Intermodulation characteristics*

3. Intermodulation distortion
   I_C = 14 mA; V_{CE} = 6 V; R_L = 37,5 Ω; T_{amb} = 25 °C
   V_o = 100 mV at f_p = 183 MHz
   V_o = 100 mV at f_q = 200 MHz
   measured at $f_{(2q-p)}$ = 217 MHz d_{im} typ.   −50 dB

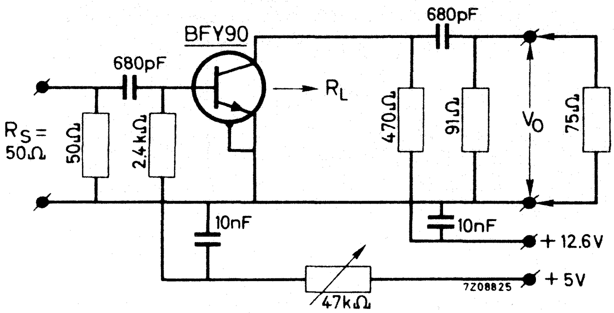

Fig. 5 Test circuit.

y parameters at f = 500 MHz (common emitter)*

I_C = 2 mA; V_{CE} = 5 V; T_{amb} = 25 °C ←

Input conductance	g_{ie}	typ.	16	mS
Input capacitance	C_{ie}	typ.	3,75	pF
Feedback admittance	$\lvert y_{re} \rvert$	typ.	1,55	mS
Phase angle of feedback admittance	φ_{re}	typ.	258°	
Transfer admittance	$\lvert y_{fe} \rvert$	typ.	45	mS
Phase angle of transfer admittance	φ_{fe}	typ.	285°	
Output conductance	g_{oe}	typ.	0,19	mS
Output capacitance	C_{oe}	typ.	1,9	pF

Maximum unilateralised power gain

$$G_{UM} = \frac{|y_{fe}|^2}{4 g_{ie} g_{oe}}$$

I_C = 2 mA; V_{CE} = 5 V; f = 500 MHz; T_{amb} = 25 °C G_{UM} typ.   22 dB ←

---

* Shield lead grounded.

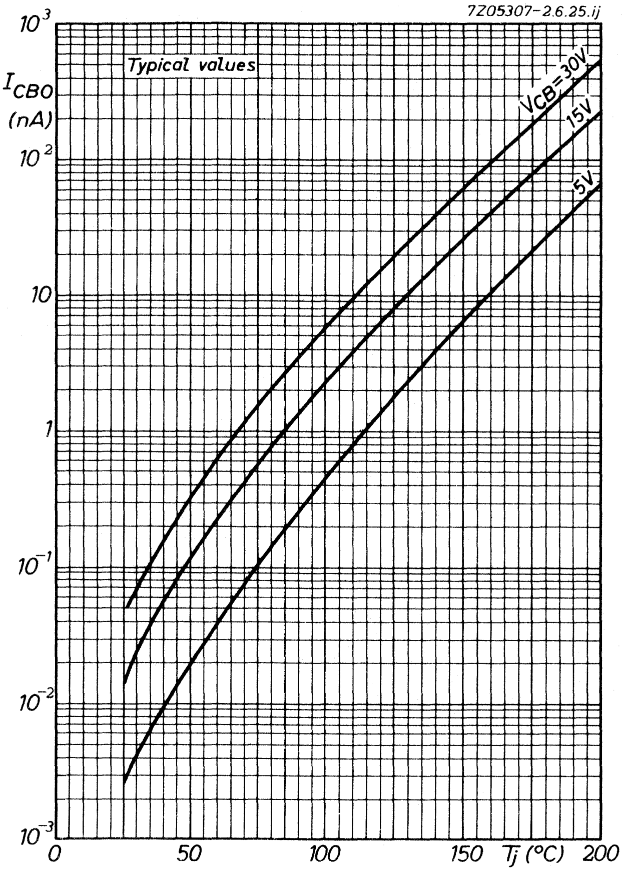

Fig. 6 Typical values.

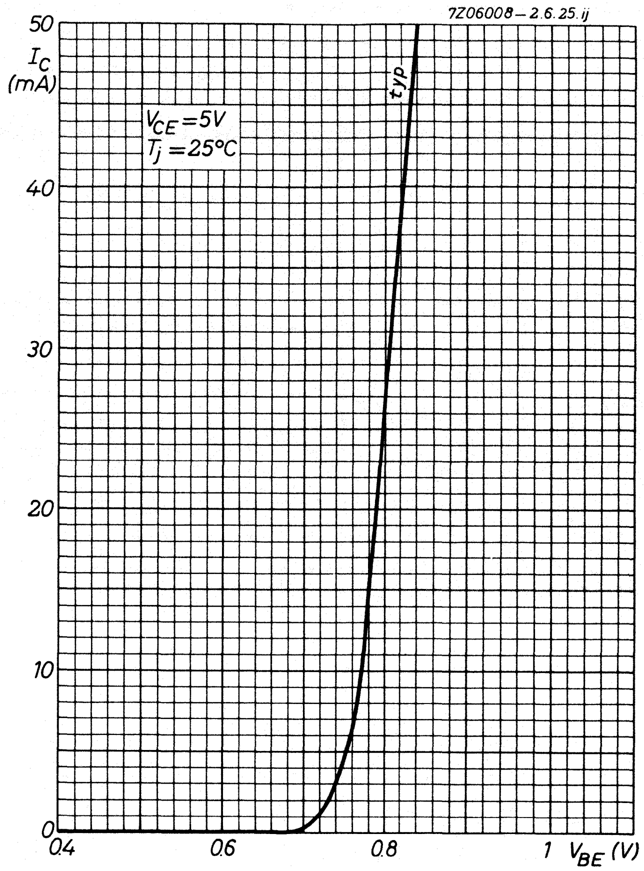

Fig. 7 V_{CE} = 5 V; T_j = 25 °C; typical values.

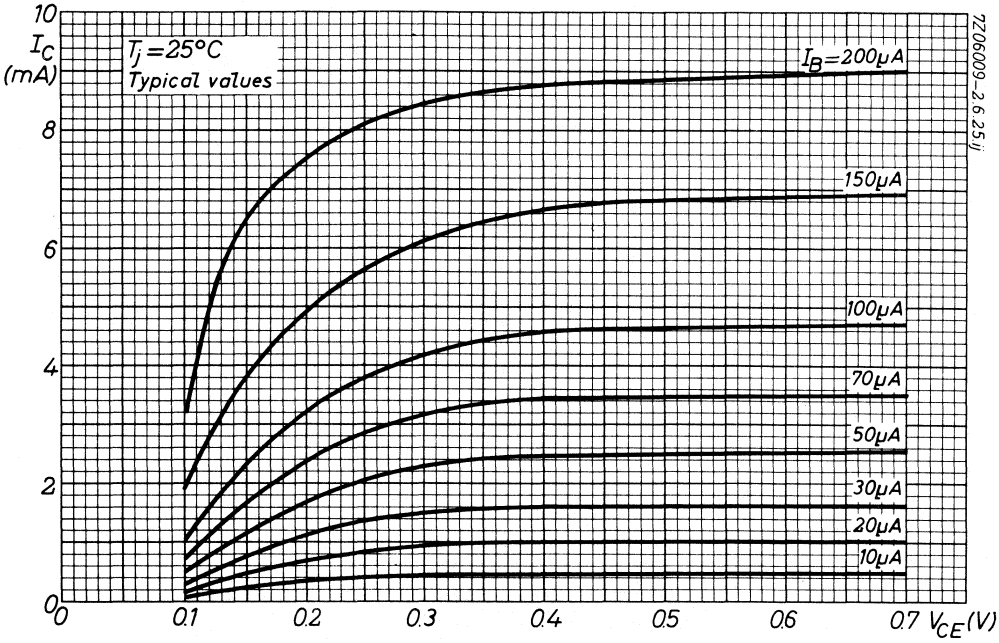

Fig. 8 T_j = 25 °C; typical values.

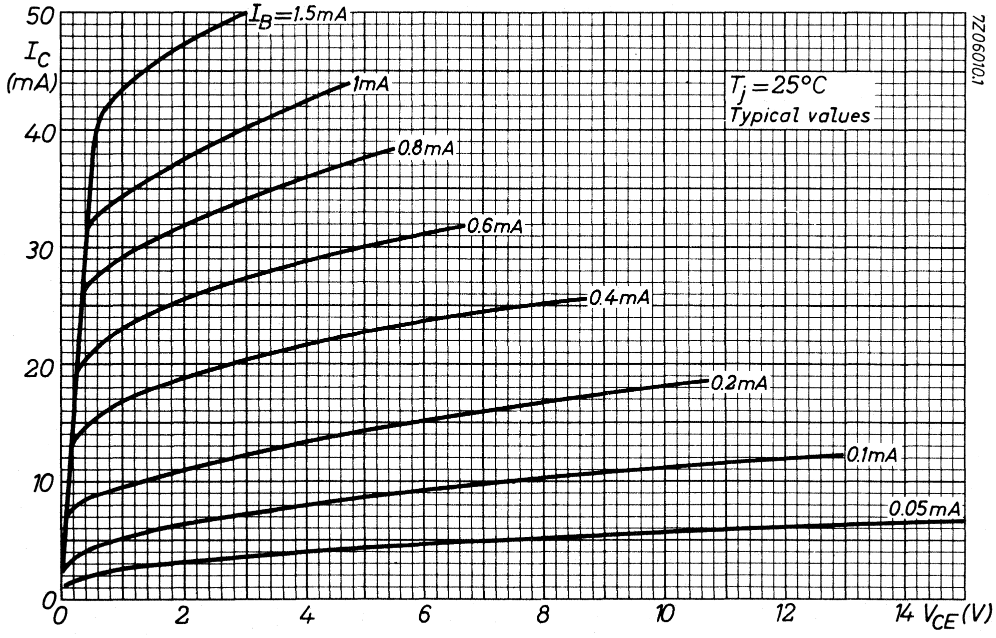

Fig. 9 T_j = 25 °C; typical values.

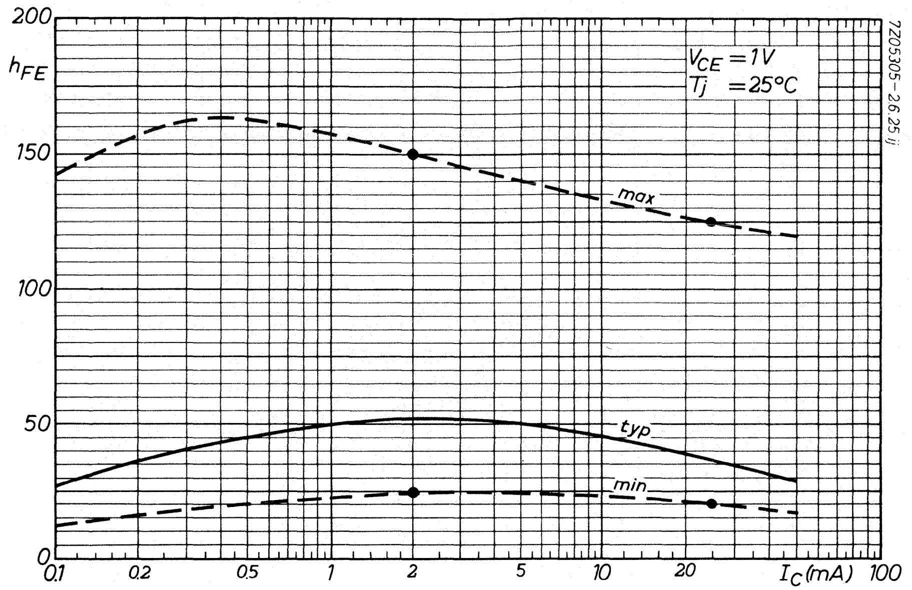

Fig. 10 V_{CE} = 1 V; T_j = 25 °C.

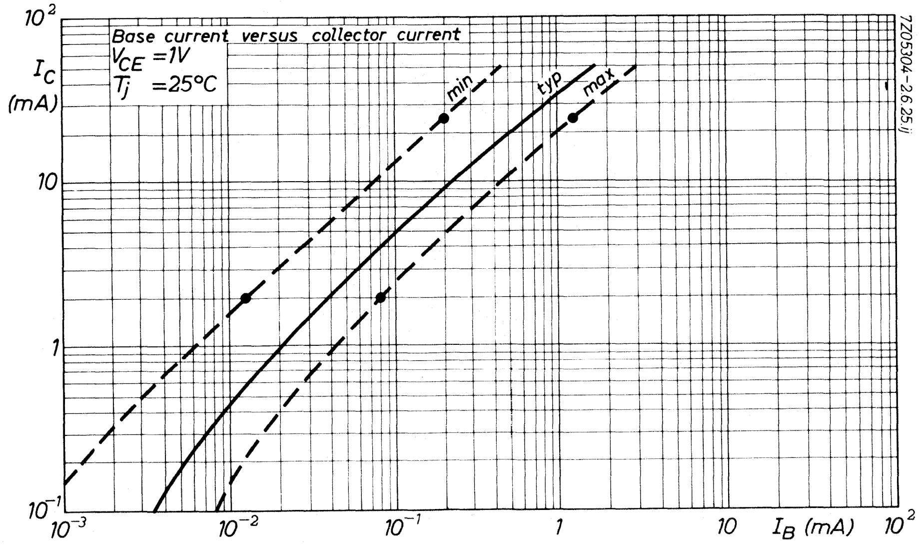

Fig. 11 V_{CE} = 1 V; T_j = 25 °C.

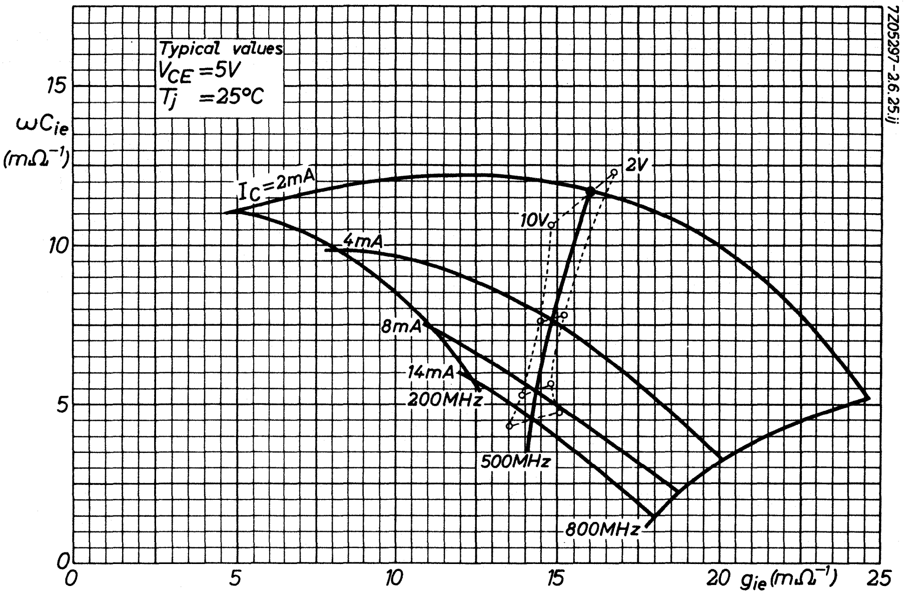

Fig. 12 V_{CE} = 5 V; T_{amb} = 25 °C; typical values.

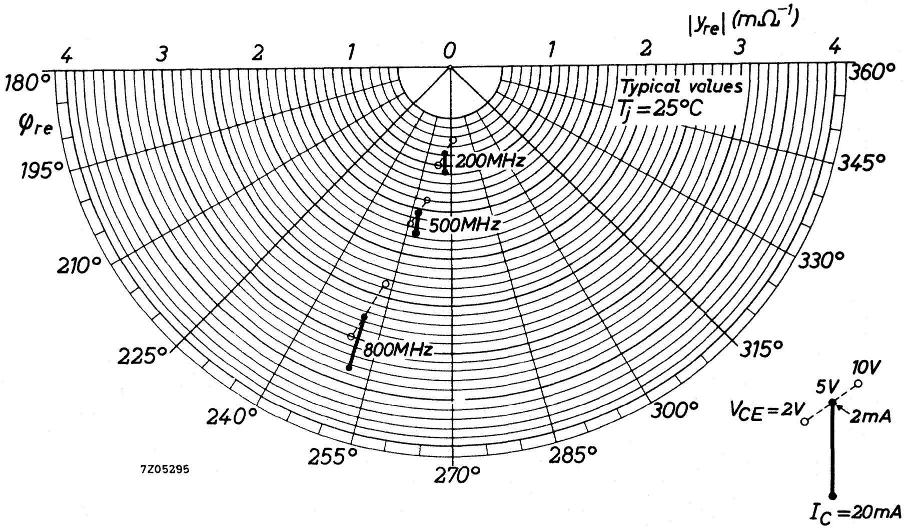

Fig. 13 T_{amb} = 25 °C; typical values.

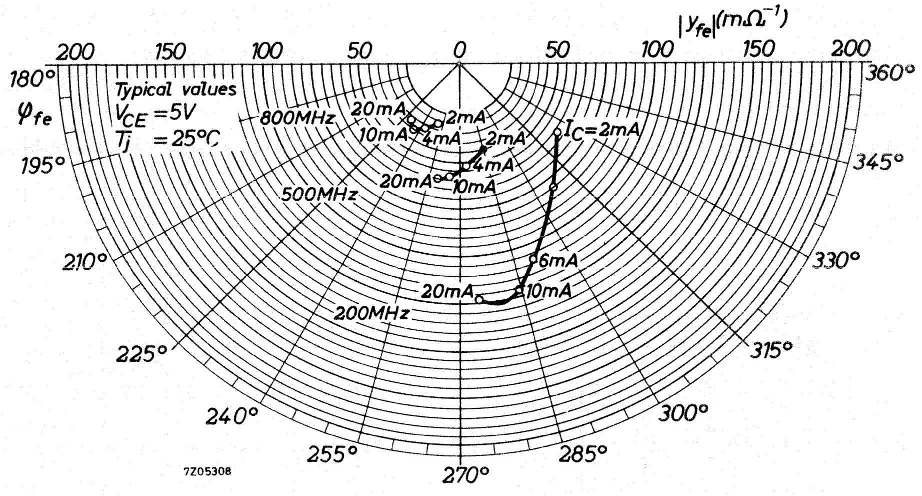

Fig. 14 V_{CE} = 5 V; T_{amb} = 25 °C; typical values.

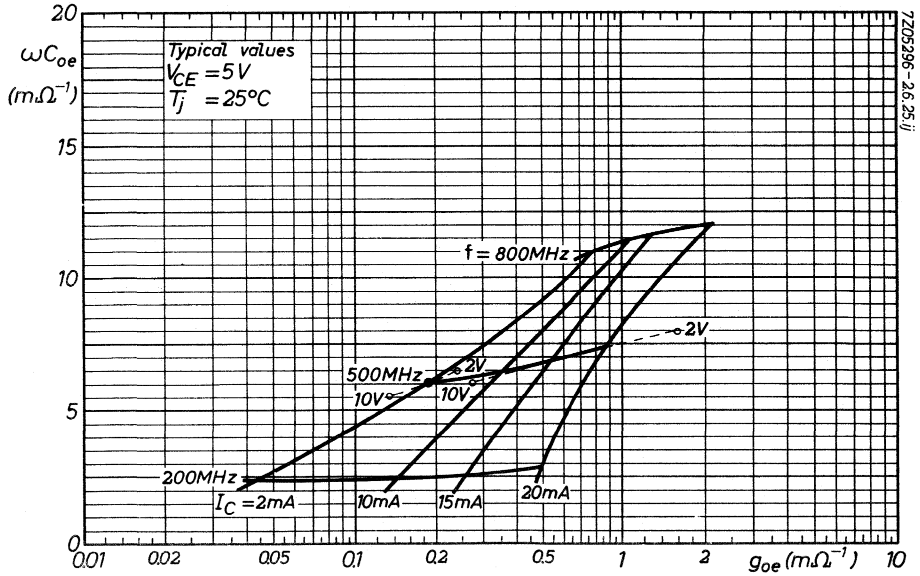

Fig. 15 V_{CE} = 5 V; T_{amb} = 25 °C; typical values.

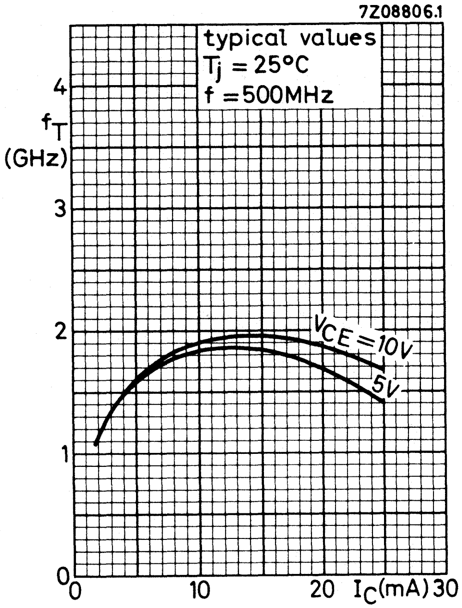

Fig. 16 f = 500 MHz; T_j = 25 °C; typical values.

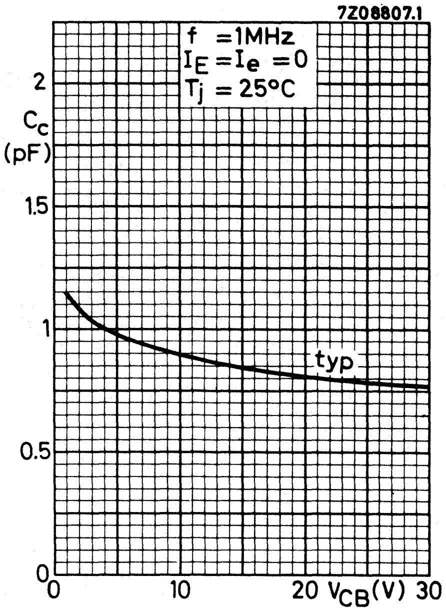

Fig. 17 $I_E = i_e = 0$; f = 1 MHz; T_j = 25 °C; typical values.

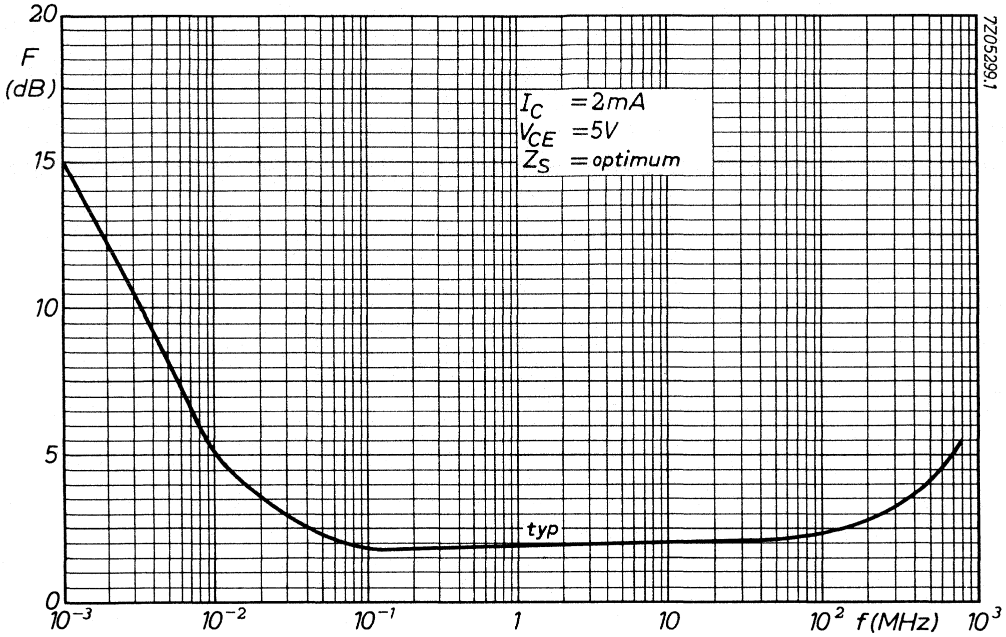

Fig. 18 V_{CE} = 5 V; I_C = 2 mA; Z_S = opt.; T_{amb} = 25 °C; typical values.

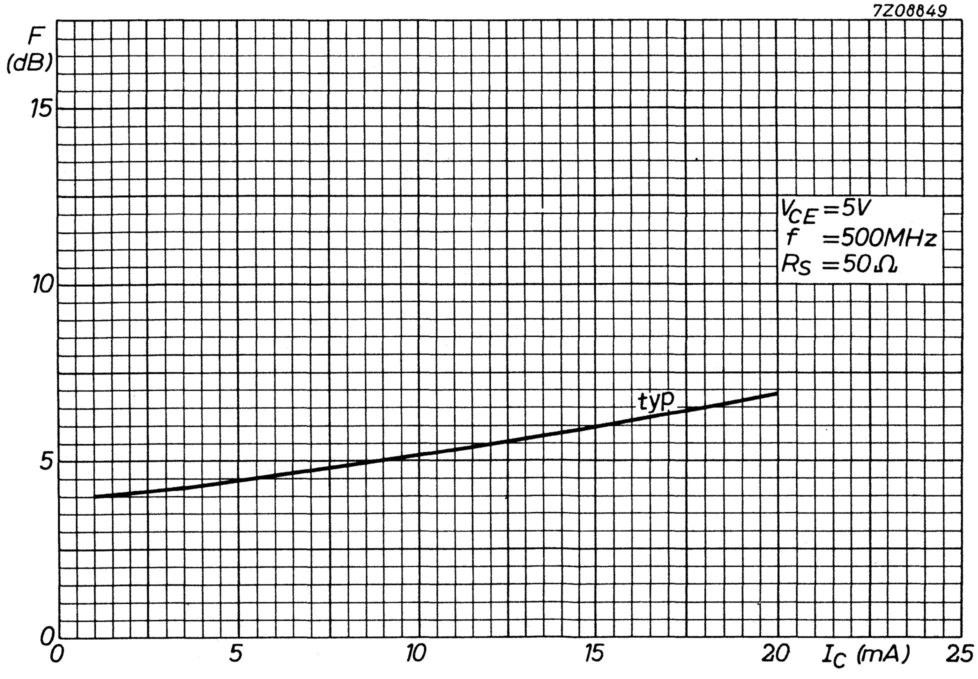

Fig. 19 V_{CE} = 5 V; f = 500 MHz; Z_S = 50 Ω; T_{amb} = 25 °C; typical values.

N-P-N H.F. WIDEBAND TRANSISTOR

N-P-N transistor in TO-72 metal envelope with insulated electrodes and a shield lead connected to the case. The 2N918 is primarily intended for low power amplifiers and oscillators in the v.h.f. and u.h.f. ranges for industrial service.

QUICK REFERENCE DATA

Collector-base voltage (open emitter)	V_{CBO}	max.	30	V
Collector-emitter voltage (open base)	V_{CEO}	max.	15	V
Collector current (d.c.)	I_C	max.	50	mA
Total power dissipation up to T_{amb} = 25 °C	P_{tot}	max.	200	mW
Junction temperature	T_j	max.	200	°C
Transition frequency I_C = 6 mA; V_{CE} = 10 V	f_T	min.	900	MHz
Maximum unilateralized power gain I_C = 6 mA; V_{CE} = 12 V; f = 200 MHz	G_{UM}	typ.	36	dB
Noise figure at f = 60 MHz I_C = 1 mA; V_{CE} = 6 V; Z_S = 400 Ω	F	max.	6,0	dB

MECHANICAL DATA

Dimensions in mm

Fig. 1 TO-72.

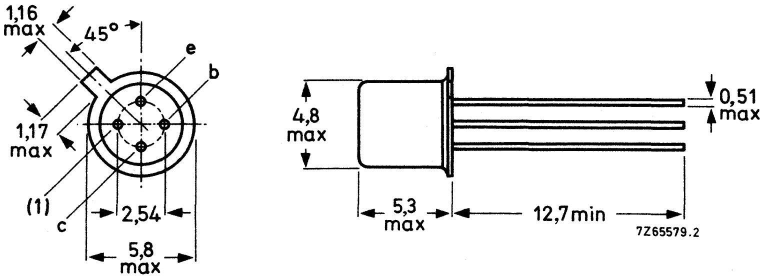

(1) = shield lead (connected to case).

Accessories: 56246 (distance disc).

RATINGS

Limiting values in accordance with the Absolute Maximum System (IEC 134)

Collector-base voltage (open emitter)	V_{CBO}	max.	30	V
→ Collector-emitter voltage (open base)	V_{CEO}	max.	15	V
Emitter-base voltage (open collector)	V_{EBO}	max.	3	V
Collector current (d.c.)	I_C	max.	50	mA
Total power dissipation up to T_{amb} = 25 °C	P_{tot}	max.	200	mW
Storage temperature	T_{stg}	−65 to + 200		°C
Junction temperature	T_j	max.	200	°C

THERMAL RESISTANCE

From junction to ambient in free air	$R_{th\,j\text{-}a}$	=	880	K/W
From junction to case	$R_{th\,j\text{-}c}$	=	580	K/W

CHARACTERISTICS

T_j = 25 °C unless otherwise specified. All measurements taken with ungrounded shield lead.

Collector cut-off current					
$I_E = 0$; $V_{CB} = 15$ V	I_{CBO}	max.	10	nA	
$I_E = 0$; $V_{CB} = 15$ V; $T_j = 150$ °C	I_{CBO}	max.	1	μA	
Saturation voltages					
$I_C = 10$ mA; $I_B = 1$ mA	V_{CEsat}	max.	0,4	V	
	V_{BEsat}	max.	1	V	
D.C. current gain					
$I_C = 3$ mA; $V_{CE} = 1$ V	h_{FE}	min.	20		
Collector capacitance at f = 140 kHz					
$I_E = I_e = 0$; $V_{CB} = 10$ V	C_c	max.	1,7	pF	
$I_E = I_e = 0$; $V_{CB} = 0$	C_c	max.	3,0	pF	
Emitter capacitance at f = 140 kHz					
$I_C = I_c = 0$; $V_{EB} = 0,5$ V	C_e	max.	2,0	pF	
Transition frequency					
$I_C = 6$ mA; $V_{CE} = 10$ V*	f_T	min.	900	MHz	
Noise figure at f = 60 MHz					
$I_C = 1$ mA; $V_{CE} = 6$ V; $Z_S = 400\ \Omega$; $T_{amb} = 25$ °C	F	max.	6,0	dB	←
Oscillator power output at f = 500 MHz					
$-I_E = 8$ mA; $V_{CB} = 15$ V; $T_{amb} = 25$ °C	P_o	min.	30	mW	←
Maximum unilateralised power gain					
$G_{UM} = \frac{\lvert y_{fe}\rvert^2}{4 g_{ie} g_{oe}}$					
$I_C = 6$ mA; $V_{CE} = 12$ V; f = 200 MHz; $T_{amb} = 25$ °C	G_{UM}	typ.	36	dB	←

---

* JEDEC registration: $I_C = 4$ mA; $V_{CE} = 10$ V, $f_T > 600$ MHz.

CHARACTERISTICS (continued)

Available power gain at f = 200 MHz

I_C = 6 mA; V_{CE} = 12 V; T_{amb} = 25 °C	G_p	min.	15 dB

Basic circuit for measuring the available neutralised power gain (Fig. 2)

Grounded shield lead

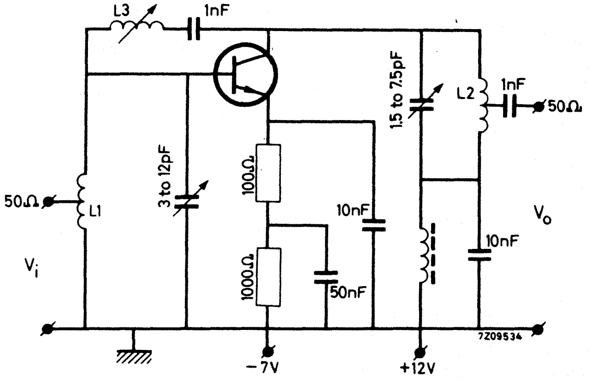

L1 = 3,5 turns tinned Cu wire, 1,3 mm
d = 8 mm; length = 11 mm
Tap at ≈ 2 turns from earth side

L2 = 8 turns tinned Cu wire, 1,3 mm
d = 3 mm; length = 22 mm
Tap at 1 turn from earth side

L3 = 0,4 to 0,65 μH

DEVICE DATA

CATV amplifier modules

type number	frequency range MHz	power gain (dB) at f = 50 MHz	application	page
BGY61	5 - 200	13,0 ± 0,5	reverse amplifiers	631
BGY65		18,5 ± 0,5		635
BGY67		22,0 ± 0,5		639
BGY67A		24,0 ± 0,5		643
BGY50	40 - 300	12,5 ± 0,4	preamplifier	599
BGY51			post amplifier	599
BGY52	40 - 300	16,4 ± 0,4	preamplifier	603
BGY53			post amplifier	603
BGY54	40 - 300	17,0 ± 0,4	preamplifier	607
BGY55			post amplifier	607
BGY56	40 - 300	22,0 ± 0,6	preamplifier	611
BGY57			post amplifier	611
BGY58	40 - 300	33,0 ± 1,0	line extender	615
BGY58A	40 - 330	34,0 ± 1,0	line extender	619
BGY59	40 - 300	38,5 ± 1,0	line extender	623
BGY60	40 - 300	33,5 ± 1,0	interstage amplifier (2 x 17 dB)	627
BGD102	40 - 450	18,5 ± 0,5	power doubler	583
BGD104		20,0 ± 0,5	amplifiers	583
BGD102E	40 - 450	18,5 ± 0,5	power doubler	587
BGD104E		20,0 ± 0,5	amplifiers	587
BGY70	40 - 450	12,5 ± 0,4	preamplifier	647
BGY71			post amplifier	647
BGY74	40 - 450	17,0 ± 0,4	preamplifier	651
BGY75			post amplifier	651
BGY78	40 - 450	34,0 ± 1,0	line extender	655
BGY84	40 - 450	17,0 ± 0,5	preamplifier	659
BGY85			post amplifier	659
BGY84A	40 - 450	18,4 ± 0,4	preamplifier	663
BGY85A			post amplifier	663
BGY86	40 - 450	22,0 ± 0,5	preamplifier	667
BGY87			post amplifier	667
BGY88	40 - 450	34,5 ± 1,0	line extender	671
BGY584A	40 - 550	18,2 ± 0,5	preamplifier	675
BGY585A			post amplifier	675
BGY586	40 - 550	22,0 ± 0,5	preamplifier	679
BGY587			post amplifier	679
BGD502	40 - 550	18,5 ± 0,5	power doubler	591
BGD504		20,0 ± 0,5	power doubler	591
BGX885	40 - 860	17,0 ± 0,5	40 - 860 MHz amplifier	595

All modules normally operate at V_B = 24 V, but are able to withstand supply transients up to 30 V.

CATV POWER-DOUBLER AMPLIFIER MODULES

Power-doubler amplifier modules for CATV systems operating at frequencies up to 450 MHz.

BGD102: 18,5 dB gain;
BGD104: 20,0 dB gain.

Features:

- excellent linearity;
- high output level;
- optimal reliability ensured by TiPtAu metallized crystals, silicon nitride passivation and rugged construction.

QUICK REFERENCE DATA

			BGD102	BGD104	
Frequency range	f		40 to 450	40 to 450	MHz
Source impedance and load impedance	$Z_S = Z_L$	=	75	75	Ω
Power gain at f = 50 MHz	G_P		18,5 ±0,5	20,0 ±0,5	dB
Slope cable equivalent f = 40 MHz to 450 MHz	SL		0,5 to 2,5	0,5 to 2,5	dB
Flatness of frequency response f = 40 MHz to 450 MHz	FL	max.	±0,3	±0,3	dB
Return losses at input and output f = 40 MHz to 450 MHz	$S_{11\text{-}22}$	min.	18	18	dB
2nd order distortion V_o = 46 dBmV	d_2	max.	−73	−73	dB
Composite triple beat; 60 channels V_o = 46 dBmV	CTB	max.	−65	−64	dB
Cross modulation V_o = 46 dBmV at 60 channels	X_{mod}	max.	−67	−66	dB
Noise figure f = 40 MHz to 450 MHz	F	max.	7	7	dB
D.C. supply voltage	$+V_B$	=	24	24	V*
Total d.c. current consumption at V_B = +24 V	I_{tot}	max.	435	435	mA

MECHANICAL DATA

SOT-115 (see Fig. 1).

---

* The modules normally operate at V_B = 24 V, but are able to withstand supply transients up to 30 V.

MECHANICAL DATA

Dimensions in mm

Fig. 1 SOT-115.

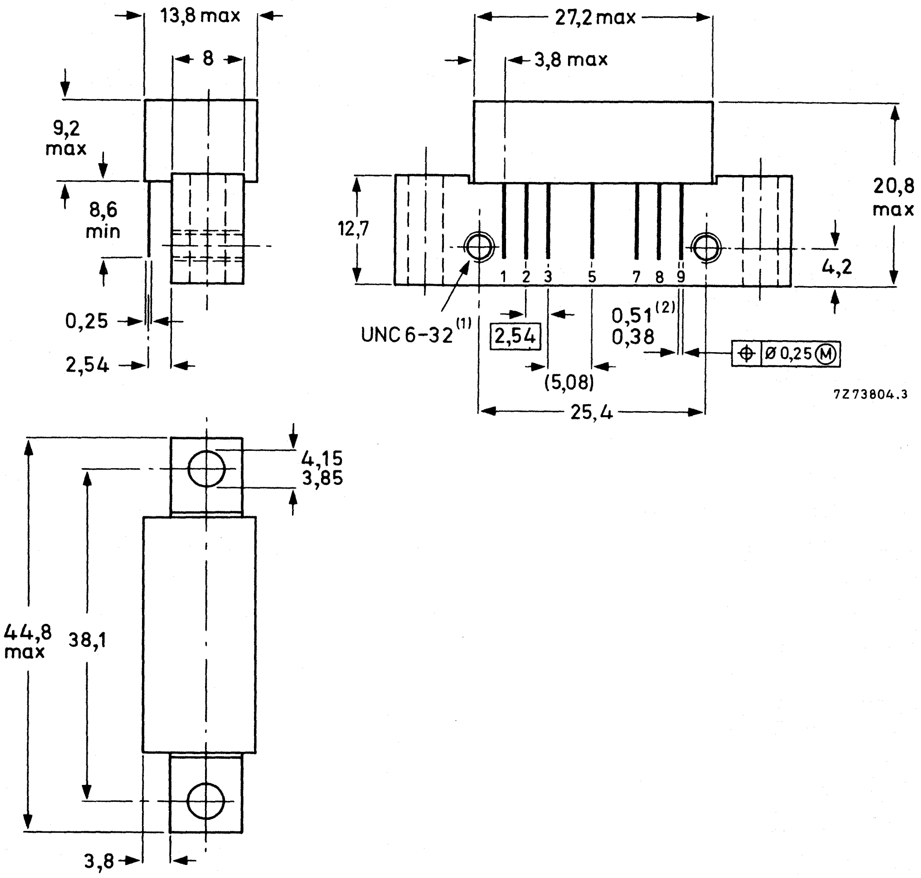

(1) Screw 6-32UNC-2A available upon request (see "Accessories")
(2) Gold-plated leads.

→ See "Mounting and Soldering Recommendations".

RATINGS

Limiting values in accordance with the Absolute Maximum System (IEC 134)

R.F. input voltage	V_i	max. 65	dBmV
Storage temperature	T_{stg}	−40 to +100	°C
Operating mounting base temperature	T_{mb}	−20 to +100	°C

CHARACTERISTICS

Supply voltage V_B = +24 V; T_{mb} = 35 °C

			BGD102	BGD104	
Power gain at f = 50 MHz	G_P		18,5 ±0,5	20,0 ±0,5	dB
Power gain at f = 450 MHz	G_P		19,2–21,2	20,5–22,5	dB
Slope cable equivalent f = 40 MHz to 450 MHz	SL		0,5 to 2,5	0,5 to 2,5	dB
Flatness of frequency response f = 40 MHz to 450 MHz	FL	max.	±0,3	±0,3	dB
Return losses at input and output $Z_S = Z_L = 75\ \Omega$; f = 40 MHz to 450 MHz	$S_{11\text{-}22}$	min.	18	18	dB
2nd order distortion V_o = 46 dBmV; channel 2 V_o = 46 dBmV; channel H5 Measured at channel H14	d_2	max.	−73	−73	dB
Composite triple beat at 60 channels V_o = 46 dBmV; tested in channel H22	CTB	max.	−65	−64	dB
Cross modulation at 60 channels V_o = 46 dBmV; tested in channel 2	X_{mod}	max.	−67	−66	dB
Noise figure f = 40 MHz to 450 MHz	F	max.	7	7	dB
Total d.c. current consumption	I_{tot}	max.	435	435	mA

CATV POWER-DOUBLER AMPLIFIER MODULES

Power-doubler amplifier modules for CATV systems operating at frequencies up to 450 MHz.

BGD102E: 18,5 dB gain;
BGD104E: 20,0 dB gain.

Features:

- excellent linearity;
- high output level;
- optimal reliability ensured by TiPtAu metallized crystals, silicon nitride passivation and rugged construction.

QUICK REFERENCE DATA

			BGD102E	BGD104E	
Frequency range	f		40 to 450	40 to 450	MHz
Source impedance and load impedance	$Z_S=Z_L$	=	75	75	Ω
Power gain at f = 50 MHz	G_P		18,5 ±0,5	20,0 ±0,5	dB
Slope cable equivalent f = 40 MHz to 450 MHz	SL		0,5 to 2,0	0,5 to 2,0	dB ←
Flatness of frequency response f = 40 MHz to 450 MHz	FL	max.	±0,3	±0,3	dB
Return losses at input and output at f = 40 MHz	$S_{11\text{-}22}$	min.	20	20	dB
at f = 450 MHz		max.	18	18	dB
Output voltage at d_{im} = –60 dB f(p+q–r)= 438,25 MHz (DIN 45004B, par.6.3: 3-tone)	V_o	min.	65,0	64,5	dBmV
2nd order distortion V_o = 46 dBmV	d_2	max.	–73	–73	dB
Noise figure f = 40 MHz to 450 MHz	F	max.	7	7	dB
D.C. supply voltage	$+V_B$	=	24	24	V*
Total d.c. current consumption at V_B = +24 V	I_{tot}	max.	435	435	mA

MECHANICAL DATA

SOT-115 (see Fig. 1).

---

* The modules normally operate at V_B = 24 V, but are able to withstand supply transients up to 30 V.

MECHANICAL DATA

Dimensions in mm

Fig. 1 SOT-115.

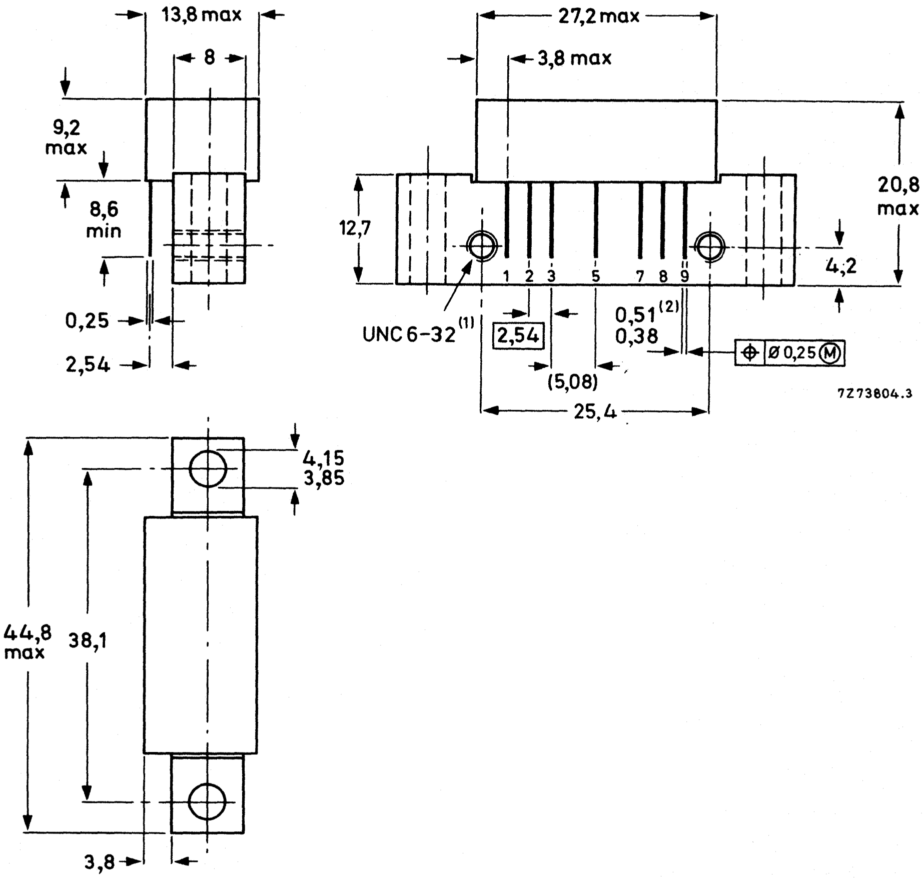

(1) Screw 6-32UNC-2A available upon request (see "Accessories").
(2) Gold-plated leads.

→ See "Mounting and Soldering Recommendations"

RATINGS

Limiting values in accordance with the Absolute Maximum System (IEC 134)

R.F. input voltage	V_i	max.	65	dBmV
Storage temperature	T_{stg}		−40 to +100	°C
Operating mounting base temperature	T_{mb}		−20 to +100	°C

CHARACTERISTICS

Supply voltage V_B = +24 V; T_{mb} = 35 °C

			BGD102E	BGD104E		
Power gain at f = 50 MHz	G_P		18,5 ±0,5	20,0 ±0,5	dB	
Power gain at f = 450 MHz	G_P		19,2–21,2	20,5–22,5	dB	
Slope cable equivalent f = 40 MHz to 450 MHz	SL		0,5 to 2,0	0,5 to 2,0	dB	←
Flatness of frequency response f = 40 MHz to 450 MHz	FL	max.	±0,3	±0,3	dB	
Return losses at input and output at $Z_S = Z_L = 75\ \Omega$;						
f = 40 MHz to 80 MHz	$S_{11\text{-}22}$	min.	20	20	dB	
f = 80 MHz to 160 MHz	$S_{11\text{-}22}$	min.	19	19	dB	
f = 160 MHz to 450 MHz	$S_{11\text{-}22}$	min.	18	18	dB	
Output voltage at d_{im} = −60 dB (DIN 45004B,6.3: 3-tone)						
$V_p = V_o$; f_p = 440,25 MHz						
$V_q = V_o$ −6 dB; f_q = 447,25 MHz						
$V_r = V_o$ −6 dB; f_r = 449,25 MHz						
Measured at $f_{(p+q-r)}$ = 438,25 MHz	V_o	min.	65,0	64,5	dBmV	
2nd order distortion						
V_o = 46 dBmV; channel 2						
V_o = 46 dBmV; channel H5						
Measured at channel H14	d_2	max.	−73	−73	dB	
Composite triple beat at 60 channels V_o = 46 dBmV; tested in channel H22	CTB	max.	−65	−64	dB	←
Cross modulation at 60 channels V_o = 46 dBmV; tested in channel 2	X_{mod}	max.	−67	−66	dB	
Noise figure f = 40 MHz to 450 MHz	F	max.	7	7	dB	
Total d.c. current consumption	I_{tot}	max.	435	435	mA	

DEVELOPMENT DATA

This data sheet contains advance information and
specifications are subject to change without notice.

BGD502
BGD504

CATV POWER-DOUBLER AMPLIFIER MODULES

Hybrid amplifier modules for use in CATV systems and operating at frequencies up to 550 MHz.

BGD502: 18,5 dB gain
BGD504: 20,0 dB gain

Features

- excellent linearity
- extremely low noise
- optimal reliability ensured by TiPtAu metallized crystals, silicon nitride glass barrier and rugged construction

QUICK REFERENCE DATA

			BGD502	BGD504	
Frequency range	f		40 to 550	40 to 550	MHz
Source impedance and load impedance	$Z_S = Z_L$	=	75	75	Ω
Power gain at f = 50 MHz	G_p		18,5 ± 0,5	20,0 ± 0,5	dB
Slope cable equivalent f = 40 MHz to 550 MHz	SL		0,2 to 2,2	0,0 to 2,0	dB ←
Flatness of frequency response f = 40 MHz to 550 MHz	FL	max.	± 0,3	± 0,3	dB
Return losses at input and output f = 40 MHz to 550 MHz	$S_{11\text{-}22}$	min.	18	18	dB
Output voltage at d_{im} = −60 dB (DIN 45004B, par. 6.3: 3-tone)	V_o	min.	64	63,5	dBmV
2nd-order distortion V_o = 44 dBmV	d_2	max.	−72	−70	dB
Composite triple beat; 77 channels V_o = 44 dBmV	CTB	max.	−65	−64	dB ←
Cross modulation V_o = 44 dBmV	X_{mod}	max.	−68	−67	dB
Noise figure f = 550 MHz	F	max.	8,0	8,0	dB
D.C. supply voltage*	$+V_B$	=	24	24	V*
Total d.c. current consumption at V_B = + 24 V	I_{tot}	max.	435	435	mA
Operating mounting base temperature	T_{mb}		−20 to + 100		°C

MECHANICAL DATA

SOT-115 (see Fig. 1).

---

* The modules normally operate at V_B = 24 V, but are able to withstand supply transients up to 30 V.

MECHANICAL DATA

Dimensions in mm

Fig. 1 SOT-115.

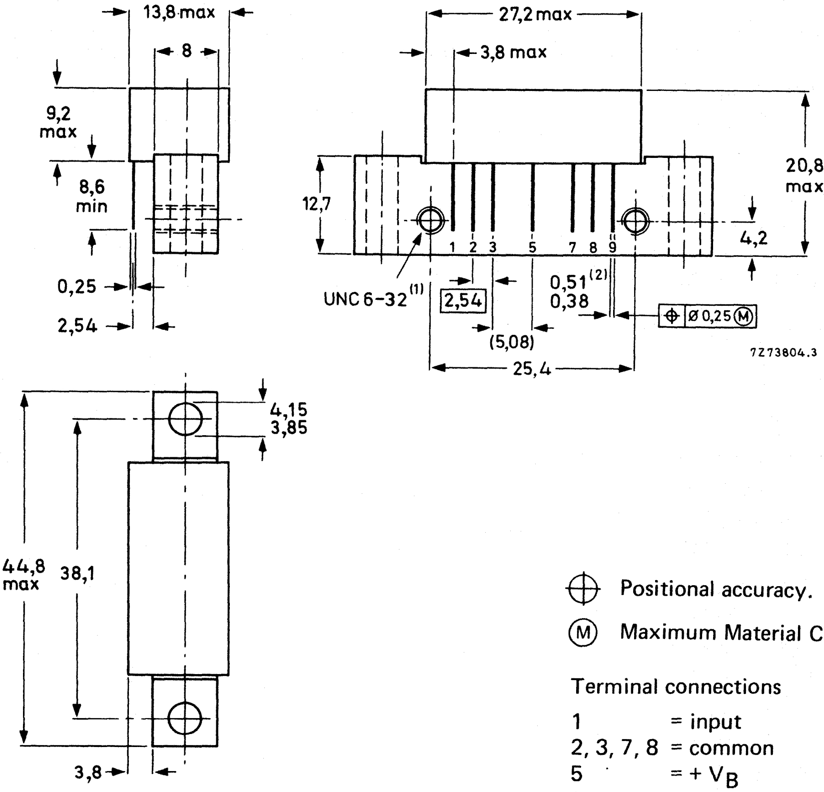

⌖ Positional accuracy.

Ⓜ Maximum Material Condition.

Terminal connections

1 = input
2, 3, 7, 8 = common
5 = + V_B
9 = output

(1) Screw 6-32UNC-2A available upon request (see "Accessories").
(2) Gold-plated leads.

See "Mounting and Soldering Recommendations".

RATINGS

Limiting values in accordance with the Absolute Maximum System (IEC 134)

R.F. input voltage	V_i	max. 60	dBmV
Storage temperature	T_{stg}	−40 to + 100	°C
Operating mounting base temperature	T_{mb}	−20 to + 100	°C

CHARACTERISTICS

Supply voltage $V_B = +24$ V; $Z_S = Z_L = 75\ \Omega$; $T_{mb} = 35\ ^{\circ}C$

			BGD502	BGD504	
Power gain at f = 50 MHz	G_p		18,5 ± 0,5	20,0 ± 0,5	dB
Power gain at f = 550 MHz	G_p		18,8–20,8	20,2–22,2	dB
Slope cable equivalent f = 40 MHz to 550 MHz	SL		0,2 to 2,2	0,0 to 2,0	dB
Flatness of frequency response f = 40 MHz to 550 MHz	FL	max.	± 0,3	± 0,3	dB
Return losses at input and output $Z_S = Z_L = 75\ \Omega$ f = 40 to 80 MHz		min.	20	20	dB
f = 80 to 160 MHz	$S_{11\text{-}22}$	min.	19	19	dB
f = 160 MHz to 550 MHz		min.	18	18	dB
Output voltage at $d_{im} = -60$ dB (DIN 45004B; par. 6.3: 3-tone) $V_p = V_o$; $f_p = 540{,}25$ MHz $V_q = V_o - 6$ dB; $f_q = 547{,}25$ MHz $V_r = V_o - 6$ dB; $f_r = 549{,}25$ MHz Tested at $f_{(p+q-r)} = 538{,}25$ MHz	V_o	min.	64	63,5	dBmV
2nd-order distortion $V_p = 44$ dBmV; $f_p = 55{,}25$ MHz (ch. 2) $V_q = 44$ dBmV; $f_q = 493{,}25$ MHz (ch. 18) Measured at $f_{(p+q)} = 548{,}5$ MHz (ch. 27)	d_2	max.	−72	−70	dB
Composite triple beat at 77 channels $V_o = 44$ dBmV; tested at channel 27	CTB	max.	−65	−64	dB
Cross modulation at 77 channels $V_o = 44$ dBmV; tested in channel 2	X_{mod}	max.	−68	−67	dB
Noise figure f = 550 MHz	F	max.	8,0	8,0	dB
Total d.c. current consumption	I_{tot}	typ.	415	415	mA
		max.	435	435	mA

CATV AMPLIFIER MODULE

Hybrid amplifier module for application in CATV/MATV amplifier systems operating at frequencies from 40 MHz up to 860 MHz.

Features:

- excellent linearity
- extremely low noise
- optimum reliability ensured by TiPtAu metallized crystals, silicon nitride glass barrier and rugged construction

QUICK REFERENCE DATA

Frequency range	f		40 to 860	MHz
Source impedance and load impedance	$Z_S = Z_L$		75	Ω
Power gain at f = 50 MHz	G_p		17 ± 0,5	dB
Slope cable equivalent f = 40 MHz to 860 MHz	SL		0,2 to 1,2	dB
Flatness of frequency response f = 40 MHz to 860 MHz	FL	max.	± 0,3	dB
Return losses at input and output f = 40 MHz (decrease 1,5 dB/octave)	$S_{11\text{-}22}$	min.	20	dB
Output voltage at d_{im} = 60 dB (DIN 45004, par. 6.3: 3-tone)				
$f_{(p+q-r)}$ = 339,25 MHz	V_o	min.	61	dBmV
$f_{(p+q-r)}$ = 849,25 MHz		min.	59	dBmV
2nd order distortion $f_{(p+q)}$ = 750 MHz	d_2	max.	−51	dB
Noise figures				
f = 350 MHz	F	max.	7,5	dB
f = 860 MHz		max.	8,0	dB
D.C. supply voltage	$+V_B$	=	24	V*
Total d.c. current consumption V_B = + 24 V	I_{tot}	typ.	240	mA
Operating case temperature	T_c		−20 to 100	°C

MECHANICAL DATA

SOT-115 (see Fig. 1).

---

* The module normally operates at V_B = 24 V, but is able to withstand incidental supply transients up to 30 V.

MECHANICAL DATA

Dimensions in mm

Fig. 1 SOT-115.

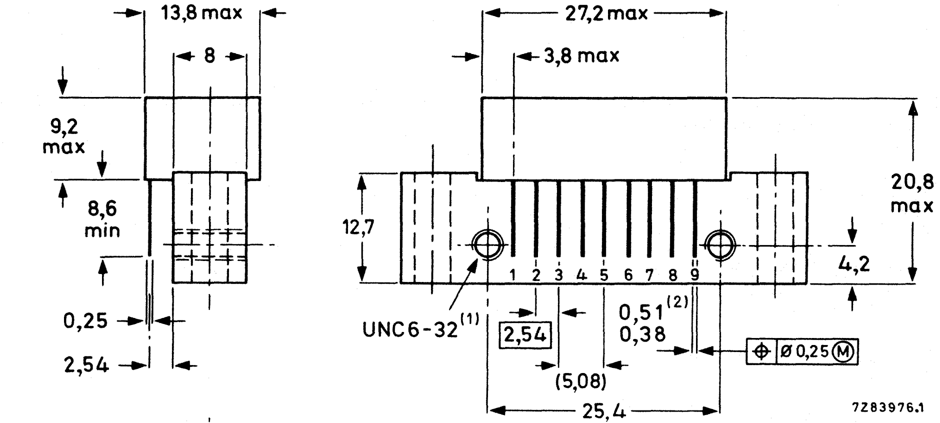

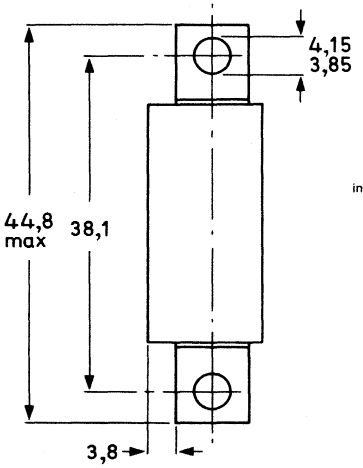

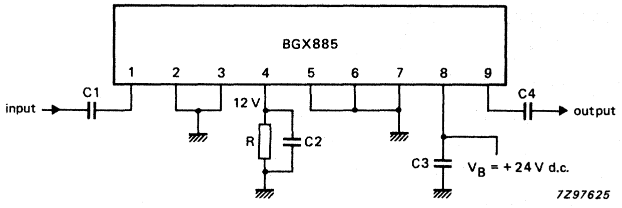

C1, C2, C3 and C4 are 10 nF ceramic multilayer capacitors

R is a 200 Ω – 1 Watt resistor.

Terminal connections:

1	= input
2, 3, 5, 6, 7	= common
8	= + V_B (24 V dc)
9	= output
4	= 12 V–60 mA supply terminal

(1) Screw 6-32UNC-2A available upon request.

See "Mounting and Soldering Recommendations".

RATINGS

Limiting values in accordance with the Absolute Maximum System (IEC 134)

R.F. input voltage	V_i	max. 60	dBmV
Storage temperature	T_{stg}	–40 to + 100	°C
Operating case temperature	T_c	–20 to + 100	°C

CHARACTERISTICS

Supply voltage V_B = + 24 V; $Z_S = Z_L$ = 75 Ω; T_c = 30 °C

Power gain at f = 50 MHz	G_p		17 ± 0,5 dB	
Slope cable equivalent f = 40 MHz to 860 MHz	SL		0,2 to 1,2 dB	←
Flatness of frequency response f = 40 MHz to 860 MHz	FL	max.	± 0,3 dB	
Return losses at input and output $Z_S = Z_L$ = 75 Ω f = 40 MHz	$S_{11\text{-}22}$	min.	20 dB	
Decrease per octave *			1,5 dB	
Voltage output at d_{im} = −60 dB (DIN 45004B, par. 6.3: 3-tone) $V_p = V_o$; f_p = 341,25 MHz $V_q = V_p$−6 dB; f_q = 348,25 MHz $V_r = V_p$−6 dB; f_r = 350,25 MHz Measured at $f_{(p+q-r)}$ = 339,25 MHz	V_o	min.	−61 dBmV	
$V_p = V_o$; f_p = 851,25 MHz $V_q = V_p$−6 dB; f_q = 858,25 MHz $V_r = V_p$−6 dB; f_r = 860,25 MHz Measured at $f_{(p+q-r)}$ = 849,25 MHz	V_o	min.	59 dBmV	
Second harmonic distortion V_p = 59 dBmV at f_p = 350 MHz V_q = 59 dBmV at f_q = 400 MHz Measured at $f_{(p+q)}$ = 750 MHz	d_2	max.	−51 dB	
Noise figures f = 350 MHz	F	max.	7,5 dB	
f = 860 MHz		max.	8,0 dB	
Total d.c. current consumption	I_{tot}	typ.	220 mA	
		max.	240 mA	

---

* $S_{11\text{-}22}$ has a minimum of 10 dB at f between 800 MHz and 860 MHz.

HYBRID V.H.F. PUSH-PULL AMPLIFIER MODULES

Hybrid amplifier modules intended for CATV systems.

QUICK REFERENCE DATA

			BGY50	BGY51	
Frequency range	f		40 to 300	40 to 300	MHz
Source impedance and load impedance	$Z_S = Z_L$	=	75	75	Ω
Power gain at f = 50 MHz	G_p		12,5 ± 0,4	12,5 ± 0,4	dB
Slope cable equivalent f = 40 MHz to 300 MHz	SL		+ 0,2 to + 0,8	+ 0,2 to + 0,8	dB
Flatness of frequency response f = 40 MHz to 300 MHz	FL	max.	± 0,2	± 0,2	dB
Return losses at input and output f = 40 MHz to 300 MHz	$S_{11\text{-}22}$	min.	20	20	dB
Output voltage at $d_{im} = -60$ dB (DIN 45004, par. 6.3: 3-tone)	V_o	min.	61	63,5	dBmV
2nd harmonic distortion at $V_o = 50$ dBmV	d_2	max.	–71	–73	dB
Noise figure f = 40 MHz to 300 MHz	F	max.	7	8	dB
D.C. supply voltage	$+V_B$	=	24	24	V *
Total d.c. current consumption at $V_B = +24$ V	I_{tot}	typ.	160	200	mA
Operating mounting base temperature	T_{mb}		–20 to + 90	–20 to + 90	°C

MECHANICAL DATA

SOT-115 (see Fig. 1).

---

* The modules are able to withstand incidental short peaks in the supply voltage up to a maximum of 30 V.

MECHANICAL DATA

Dimensions in mm

Fig. 1 SOT-115.

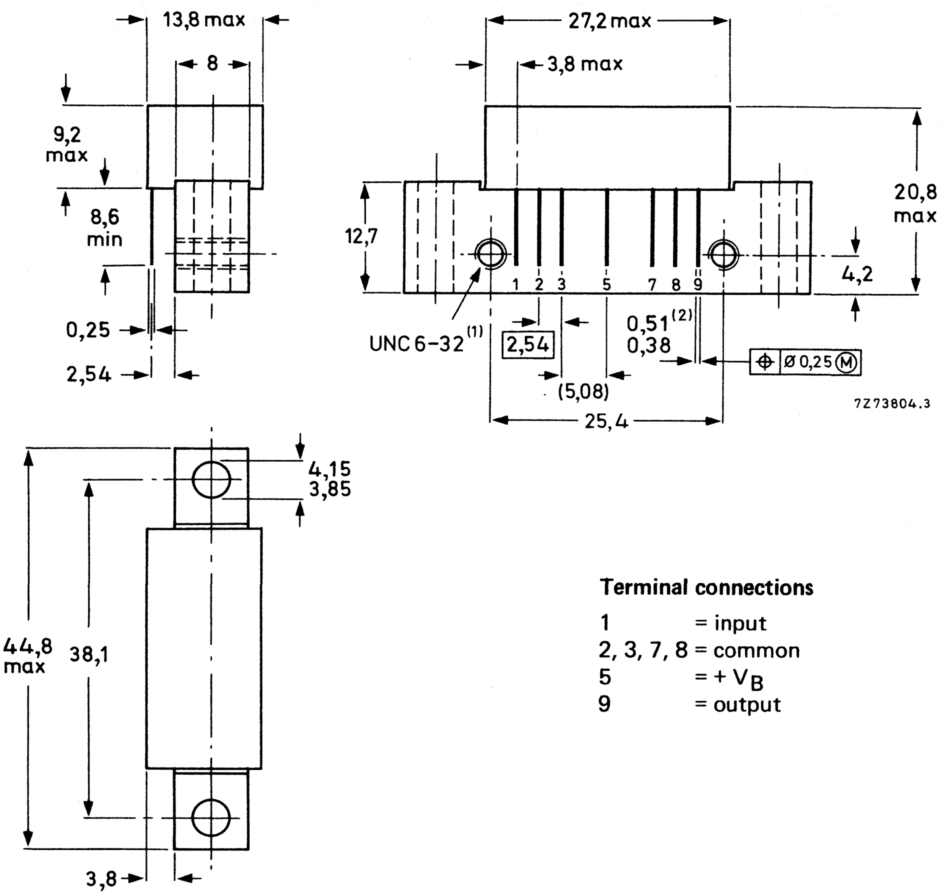

Terminal connections

1 = input
2, 3, 7, 8 = common
5 = + V_B
9 = output

(1) Screw 6-32UNC-2A available upon request (see "Accessories").

(2) Tin-plated leads. Gold-plated leads available upon request.

→ See "Mounting and Soldering Recommendations".

RATINGS

Limiting values in accordance with the Absolute Maximum System (IEC 134)

R.F. input voltage	V_i	max.	67 dBmV
Storage temperature	T_{stg}		−40 to +100 °C
Operating mounting base temperature	T_{mb}		−20 to +90 °C

CHARACTERISTICS

Supply voltage $V_B = +24$ V; $T_{amb} = 25$ °C

			BGY50	BGY51		
Power gain at f = 50 MHz	G_p		12,5 ± 0,4	12,5 ± 0,4	dB	
Slope cable equivalent f = 40 MHz to 300 MHz	SL		+0,2 to +0,8	+0,2 to +0,8	dB	
Flatness of frequency response f = 40 MHz to 300 MHz	FL	max.	± 0,2	± 0,2	dB	
Return losses at input and output $Z_S = Z_L = 75\ \Omega$; f = 40 MHz to 300 MHz	$S_{11\text{-}22}$	min.	20	20	dB	←
Output voltage at $d_{im} = -60$ dB (DIN 45004, par. 6.3: 3-tone) $V_p = V_o$; $f_p = 287{,}25$ MHz $V_q = V_o - 6$ dB; $f_q = 294{,}25$ MHz $V_r = V_o - 6$ dB; $f_r = 296{,}25$ MHz Measured at $f_{(p+q-r)} = 285{,}25$ MHz	V_o	min.	61	63,5	dBmV	
2nd harmonic distortion $V_p = V_o = 50$ dBmV; $f_p = 55{,}25$ MHz $V_q = V_o = 50$ dBmV; $f_q = 211{,}25$ MHz Measured at $f_{(p+q)} = 266{,}5$ MHz	d_2	max.	−71	−73	dB	←
Noise figure f = 40 MHz to 300 MHz	F	max.	7	8	dB	
Total d.c. current consumption	I_{tot}	typ.	160	200	mA	
		max.	180	220	mA	

HYBRID V.H.F. PUSH-PULL AMPLIFIER MODULES

Hybrid amplifier modules intended for CATV systems.

QUICK REFERENCE DATA

			BGY52	BGY53		
Frequency range	f		40 to 300	40 to 300	MHz	
Source impedance and load impedance	$Z_S = Z_L$	=	75	75	Ω	
Power gain at f = 50 MHz	G_p		16,4 ± 0,4	16,4 ± 0,4	dB	
Slope cable equivalent f = 40 MHz to 300 MHz	SL		0 to + 1,0	0 to + 1,0	dB	
Flatness of frequency response f = 40 MHz to 300 MHz	FL	max.	± 0,1	± 0,1	dB	
Return losses at input and output f = 40 MHz to 300 MHz	$S_{11\text{-}22}$	min.	20	20	dB	
Output voltage at d_{im} = –60 dB (DIN 45004, par. 6.3: 3-tone)	V_o	min.	61	63,5	dBmV	
2nd harmonic distortion at V_o = 50 dBmV	d_2	max.	–71	–73	dB	
Noise figure f = 40 MHz to 300 MHz	F	max.	6	7	dB	
D.C. supply voltage	$+V_B$	=	24	24	V	*
Total d.c. current consumption at V_B = + 24 V	I_{tot}	typ.	160	200	mA	
Operating mounting base temperature	T_{mb}		–20 to + 90	–20 to + 90	°C	

MECHANICAL DATA

SOT-115 (see Fig. 1).

---

* The modules are able to withstand incidental short peaks in the supply voltage up to a maximum of 30 V.

MECHANICAL DATA Dimensions in mm

Fig. 1 SOT-115.

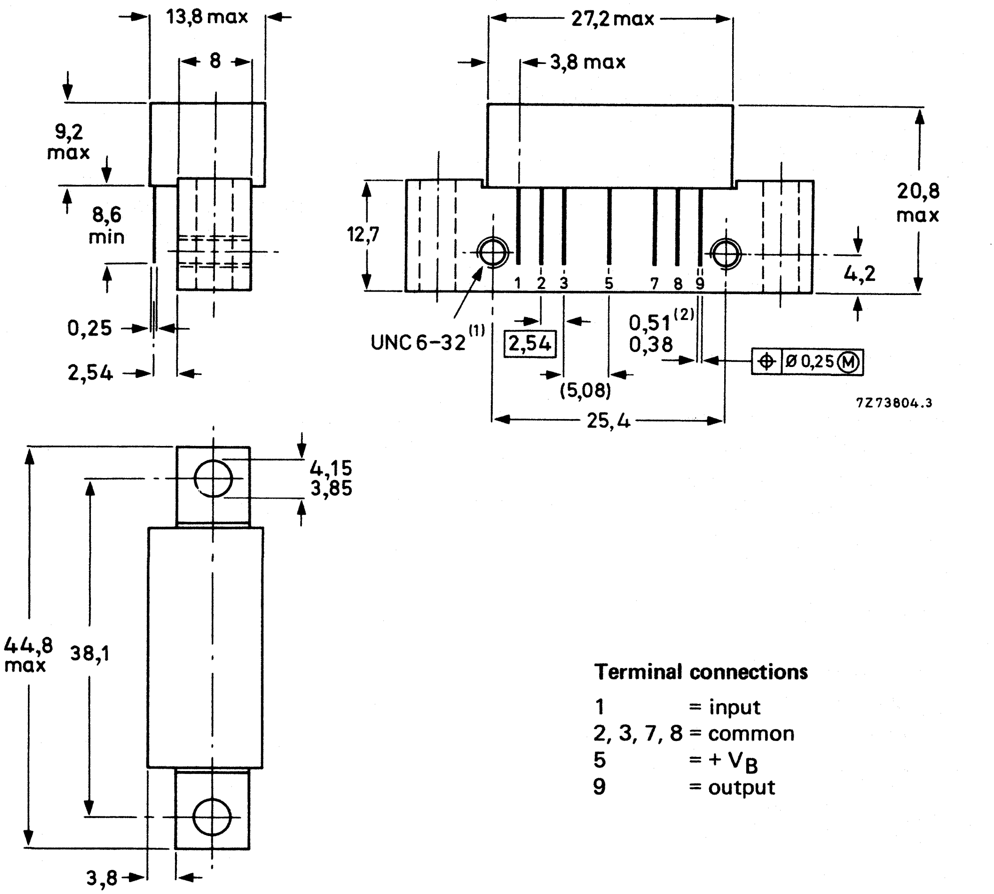

Terminal connections

1 = input
2, 3, 7, 8 = common
5 = + V_B
9 = output

(1) Screw 6-32UNC-2A available upon request (see "Accessories").

(2) Tin-plated leads. Gold-plated leads available upon request.

→ See 'Mounting and Soldering Recommendations'.

RATINGS

Limiting values in accordance with the Absolute Maximum System (IEC 134)

R.F. input voltage	V_i	max.	65 dBmV
Storage temperature	T_{stg}	−40 to +100 °C	
Operating mounting base temperature	T_{mb}	−20 to +90 °C	

CHARACTERISTICS

Supply voltage $V_B = +24$ V; $T_{amb} = 25$ °C			BGY52	BGY53		
Power gain at f = 50 MHz	G_p		16,4 ± 0,4	16,4 ± 0,4	dB	
Slope cable equivalent f = 40 MHz to 300 MHz	SL		0 to + 1,0	0 to + 1,0	dB	
Flatness of frequency response f = 40 MHz to 300 MHz	FL	max.	± 0,1	± 0,1	dB	
Return losses at input and output $Z_S = Z_L = 75\ \Omega$; f = 40 MHz to 300 MHz	$S_{11\text{-}22}$	min.	20	20	dB	←
Output voltage at $d_{im} = -60$ dB (DIN 45004, par. 6.3: 3-tone) $V_p = V_o$; $f_p = 287{,}25$ MHz $V_q = V_o - 6$ dB; $f_q = 294{,}25$ MHz $V_r = V_o - 6$ dB; $f_r = 296{,}25$ MHz Measured at $f_{(p+q-r)} = 285{,}25$ MHz	V_o	min.	61	63,5	dBmV	
2nd harmonic distortion $V_p = V_o = 50$ dBmV; $f_p = 55{,}25$ MHz $V_q = V_o = 50$ dBmV; $f_q = 211{,}25$ MHz Measured at $f_{(p+q)} = 266{,}5$ MHz	d_2	max.	−71	−73	dB	←
Noise figure f = 40 MHz to 300 MHz	F	max.	6	7	dB	
Total d.c. current consumption	I_{tot}	typ.	160	200	mA	
		max.	180	220	mA	

CATV AMPLIFIER MODULES

Hybrid amplifier modules for CATV systems operating at frequencies up to 300 MHz.

BGY54: 17 dB input amplifier module;
BGY55: 17 dB output amplifier module.

Features:
- excellent linearity;
- extremely low noise;
- optimal reliability ensured by TiPtAu metallized crystals, silicon nitride passivation and rugged construction.

QUICK REFERENCE DATA

			BGY54	BGY55	
Frequency range	f		40 to 300	40 to 300	MHz
Source impedance and load impedance	$Z_S = Z_L$	=	75	75	Ω
Power gain at f = 50 MHz	G_p		17,0 ± 0,4	17,0 ± 0,4	dB
Slope cable equivalent f = 40 MHz to 300 MHz	SL		0 to 1,0	0 to 1,0	dB
Flatness of frequency response f = 40 MHz to 300 MHz	FL	max.	± 0,1	± 0,1	dB
Return losses at input and output f = 40 MHz to 300 MHz	$S_{11\text{-}22}$	min.	20	20	dB
Output voltage at d_{im} = –60 dB (DIN 45004, par. 6.3: 3-tone)	V_o	min.	61	63,5	dBmV
2nd order distortion V_o = 50 dBmV	d_2	max.	–71	–73	dB
Composite triple beat 32 channels V_o = 46 dBmV	CTB	max.	–65	–67	dB
Output capability X_{mod} = –57 dB; 32 channels flat	V_o	min.	47,5	50	dBmV
Noise figure f = 40 MHz to 300 MHz	F	max.	6	6,5	dB
D.C. supply voltage	$+V_B$	=	24	24	V*
Total d.c. current consumption at V_B = + 24 V	I_{tot}	typ.	160	200	mA
Operating mounting base temperature	T_{mb}		–20 to + 90	–20 to + 90	°C

MECHANICAL DATA

SOT-115 (see Fig. 1).

* The modules normally operate at V_B = 24 V, but are able to withstand supply transients up to 30 V.

MECHANICAL DATA

Dimensions in mm

Fig. 1 SOT-115.

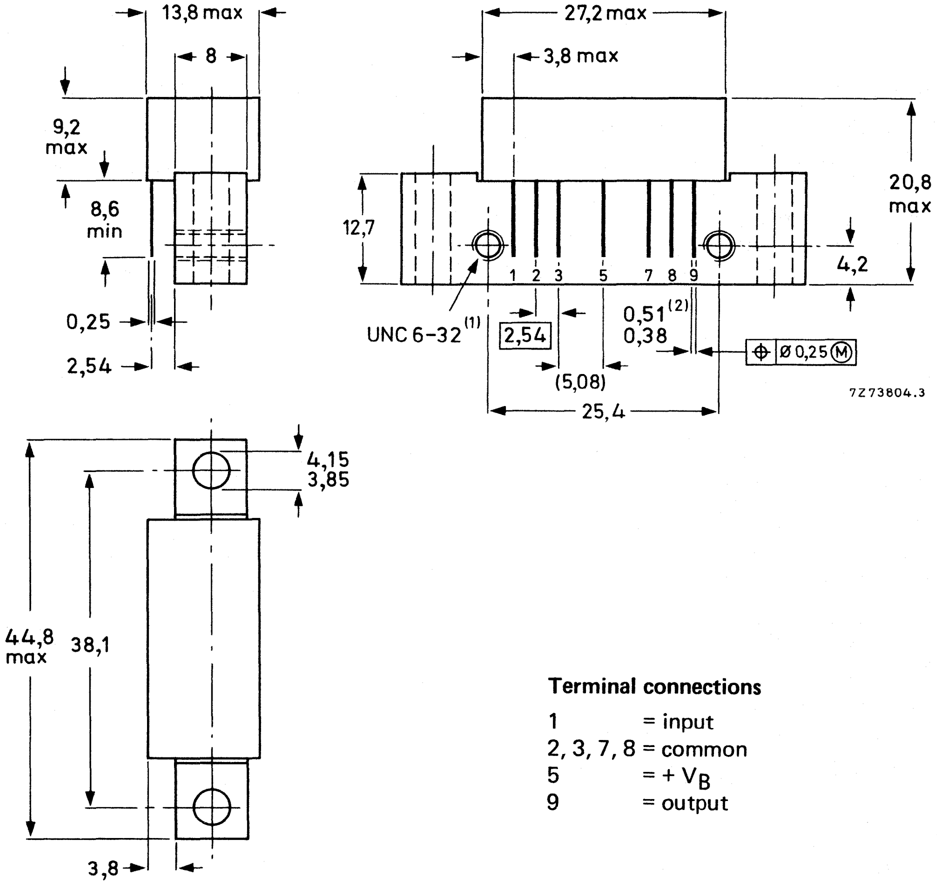

Terminal connections

1 = input
2, 3, 7, 8 = common
5 = + V_B
9 = output

(1) Screw 6-32UNC-2A available upon request (see "Accessories").
(2) Tin-plated leads. Gold-plated leads available upon request.

→ See 'Mounting and Soldering Recommendations'.

RATINGS

Limiting values in accordance with the Absolute Maximum System (IEC 134)

R.F. input voltage	V_i	max.	65	dBmV
Storage temperature	T_{stg}		−40 to + 100	°C
Operating mounting base temperature	T_{mb}		−20 to + 90	°C

CHARACTERISTICS

Supply voltage V_B = + 24 V; T_{amb} = 25 °C

			BGY54	BGY55		
Power gain at f = 50 MHz	G_p		17,0 ± 0,4	17,0 ± 0,4	dB	
Slope cable equivalent f = 40 MHz to 300 MHz	SL		0 to 1,0	0 to 1,0	dB	
Flatness of frequency response f = 40 MHz to 300 MHz	FL	max.	± 0,1	± 0,1	dB	
Return losses at input and output $Z_S = Z_L = 75\ \Omega$; f = 40 MHz to 300 MHz	$S_{11\text{-}22}$	min.	20	20	dB	
Output voltage at $d_{im} = -60$ dB (DIN 45004, 6.3: 3-tone) $V_p = V_o$; f_p = 287,25 MHz $V_q = V_o - 6$ dB; f_q = 294,25 MHz $V_r = V_o - 6$ dB; f_r = 296,25 MHz Measured at $f_{(p+q-r)}$ = 285,25 MHz	V_o	min.	61	63,5	dBmV	
2nd order distortion V_o = 50 dBmV; f_p = 55,25 MHz V_o = 50 dBmV; f_q = 211,25 MHz Measured at $f_{(p+q)}$ = 266,5 MHz	d_2	max.	−71	−73	dB	←
Composite triple beat 32 channels V_o = 46 dBmV; channel W	CTB	max.	−65	−67	dB	
Output capability on channel W $X_{mod} = -57$ dB; 32 channels flat	V_o	min.	47,5	50	dBmV	
Noise figure f = 40 MHz to 300 MHz	F	max.	6	6,5	dB	
Total d.c. current consumption	I_{tot}	typ.	160	200	mA	
		max.	180	220	mA	

HYBRID V.H.F. PUSH-PULL AMPLIFIER MODULES

Hybrid amplifier modules intended for CATV systems.

QUICK REFERENCE DATA

			BGY56	BGY57	
Frequency range	f		40 to 300	40 to 300	MHz
Source impedance and load impedance	$Z_S = Z_L$	=	75	75	Ω
Power gain at f = 50 MHz	G_p		22,0 ± 0,6	22,0 ± 0,6	dB
Slope cable equivalent f = 40 MHz to 300 MHz	SL		0 to + 1,0	0 to + 1,0	dB
Flatness of frequency response f = 40 MHz to 300 MHz	FL	max.	± 0,2	± 0,2	dB
Return losses at input and output f = 40 MHz to 300 MHz	$S_{11\text{-}22}$	min.	20	20	dB
Output voltage at d_{im} = –60 dB (DIN 45004, par. 6.3: 3-tone)	V_o	min.	61,5	64	dBmV
2nd harmonic distortion at V_o = 50 dBmV	d_2	max.	–64	–66	dB
Noise figure f = 40 MHz to 300 MHz	F	max.	6	7	dB
D.C. supply voltage	$+V_B$	=	24	24	V *
Total d.c. current consumption at V_B = + 24 V	I_{tot}	typ.	160	200	mA
Operating mounting base temperature	T_{mb}		–20 to + 90	–20 to + 90	°C

MECHANICAL DATA

SOT-115 (see Fig. 1).

---

* The modules are able to withstand incidental short peaks in the supply voltage up to a maximum of 30 V.

MECHANICAL DATA

Dimensions in mm

Fig. 1 SOT-115.

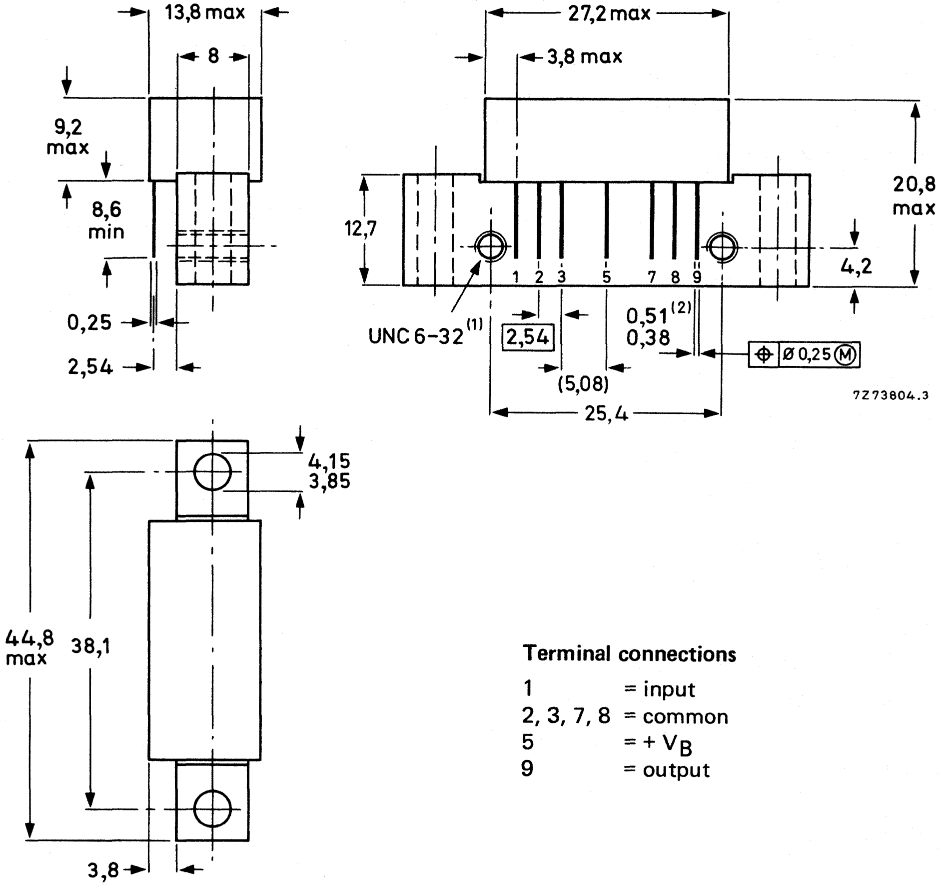

Terminal connections

1 = input
2, 3, 7, 8 = common
5 = + V_B
9 = output

(1) Screw 6-32UNC-2A available upon request (see "Accessories").

(2) Leads tin-plated. Gold-plated leads available upon request.

→ See 'Mounting and Soldering Recommendations'.

RATINGS

Limiting values in accordance with the Absolute Maximum System (IEC 134)

R.F. input voltage	V_i	max.	63	dBmV
Storage temperature	T_{stg}		−40 to +100	°C
Operating mounting base temperature	T_{mb}		−20 to +90	°C

←

CHARACTERISTICS

Supply voltage $V_B = +24$ V; $T_{amb} = 25$ °C

			BGY56	BGY57	
Power gain at f = 50 MHz	G_p		22,0 ± 0,6	22,0 ± 0,6	dB
Slope cable equivalent f = 40 MHz to 300 MHz	SL		0 to + 1,0	0 to + 1,0	dB
Flatness of frequency response f = 40 MHz to 300 MHz	FL	max.	± 0,2	± 0,2	dB
Return losses at input and output $Z_S = Z_L = 75\ \Omega$; f = 40 MHz to 300 MHz	$S_{11\text{-}22}$	min.	20	20	dB
Output voltage at $d_{im} = -60$ dB (DIN 45004 par. 6.3: 3-tone) $V_p = V_o$; $f_p = 287{,}25$ MHz $V_q = V_o - 6$ dB; $f_q = 294{,}25$ MHz $V_r = V_o - 6$ dB; $f_r = 296{,}25$ MHz Measured at $f_{(p+q-r)} = 285{,}25$ MHz	V_o	min.	61,5	64	dBmV
2nd harmonic distortion $V_p = V_o = 50$ dBmV; $f_p = 55{,}25$ MHz $V_q = V_o = 50$ dBmV; $f_q = 211{,}25$ MHz Measured at $f_{(p+q)} = 266{,}5$ MHz	d_2	max.	−64	−66	dB ←
Noise figure f = 40 MHz to 300 MHz	F	max.	6	7	dB
Total d.c. current consumption	I_{tot}	typ.	160	200	mA
		max.	180	220	mA

HYBRID V.H.F. PUSH-PULL AMPLIFIER MODULE

Hybrid amplifier module intended for CATV systems.

QUICK REFERENCE DATA

Frequency range	f		40 to 300	MHz	
Source impedance and load impedance	$Z_S = Z_L$	=	75	Ω	
Power gain at f = 50 MHz	G_p		33,0 ± 1,0	dB	
Slope cable equivalent f = 40 MHz to 300 MHz	SL		+ 0,5 to + 1,5	dB	
Flatness of frequency response f = 40 MHz to 300 MHz	FL	max.	± 0,3	dB	
Return losses at input and output f = 40 MHz to 300 MHz	$S_{11\text{-}22}$	min.	20	dB	
Output voltage at $d_{im} = -60$ dB (DIN 45004, par. 6.3: 3-tone)	V_o	min.	64	dBmV	
2nd harmonic distortion at $V_o = 50$ dBmV	d_2	max.	−70	dB	←
Noise figure f = 40 MHz to 300 MHz	F	max.	6	dB	
D.C. supply voltage	$+V_B$	=	24	V*	
Total d.c. current consumption at $V_B = +24$ V	I_{tot}	typ.	320	mA	
Operating mounting base temperature	T_{mb}		−20 to + 90	°C	

MECHANICAL DATA

SOT-115 (see Fig. 1).

---

* The module is able to withstand incidental short peaks in the supply voltage up to a maximum of 30 V.

MECHANICAL DATA

Dimensions in mm

Fig. 1 SOT-115.

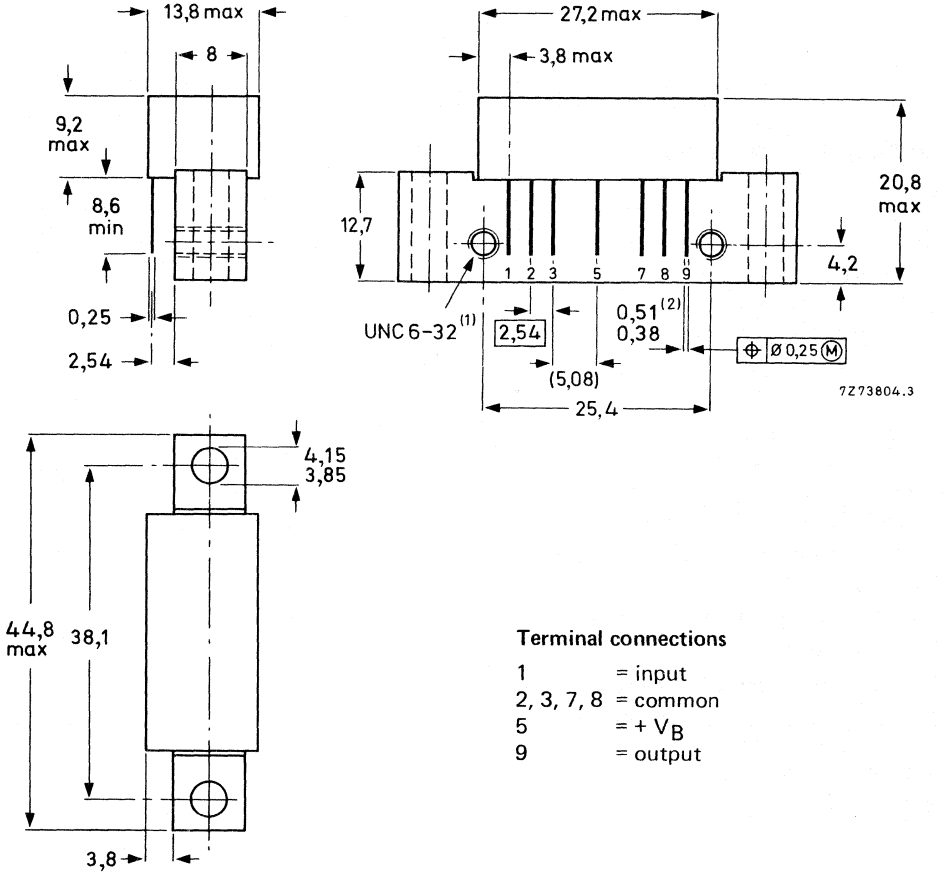

Terminal connections

1 = input
2, 3, 7, 8 = common
5 = + V_B
9 = output

(1) Screw 6-32UNC-2A available upon request (see "Accessories").

→ (2) Leads tin-plated. Gold-plated leads available upon request.

→ See 'Mounting and Soldering Recommendations'.

RATINGS

Limiting values in accordance with the Absolute Maximum System (IEC 134)

R.F. input voltage	V_i	max.	55 dBmV
Storage temperature	T_{stg}		−40 to +100 °C
Operating mounting base temperature	T_{mb}		−20 to +90 °C

CHARACTERISTICS

Supply voltage V_B = + 24 V; T_{amb} = 25 °C

Power gain at f = 50 MHz	G_p		33,0 ± 1,0 dB	
Slope cable equivalent f = 40 MHz to 300 MHz	SL		+ 0,5 to + 1,5 dB	
Flatness of frequency response f = 40 MHz to 300 MHz	FL	max.	± 0,3 dB	
Return losses at input and output $Z_S = Z_L = 75\ \Omega$; f = 40 MHz to 300 MHz	$S_{11\text{-}22}$	min.	20 dB	
Output voltage at d_{im} = −60 dB (DIN 45004, par. 6.3: 3-tone) $V_p = V_o$; f_p = 287,25 MHz $V_q = V_o$ −6 dB; f_q = 294,25 MHz $V_r = V_o$ −6 dB; f_r = 296,25 MHz Measured at $f_{(p+q-r)}$ = 285,25 MHz	V_o	min.	64 dBmV	
2nd harmonic distortion $V_p = V_o$ = 50 dBmV; f_p = 55,25 MHz $V_q = V_o$ = 50 dBmV; f_q = 211,25 MHz Measured at $f_{(p+q)}$ = 266,5 MHz	d_2	max.	−70 dB	←
Noise figure f = 40 MHz to 300 MHz	F	max.	6 dB	
Total d.c. current consumption	I_{tot}	typ. max.	320 mA 340 mA	

CATV AMPLIFIER MODULE

Hybrid amplifier module for use as 34 dB line extender in CATV systems operating at frequencies up to 330 MHz.

Features:
- excellent linearity;
- extremely low noise;
- optimal reliability ensured by TiPtAu metallized crystals, silicon nitride passivation and rugged construction.

QUICK REFERENCE DATA

Frequency range	f		40 to 330	MHz
Source impedance and load impedance	$Z_S = Z_L$		75	Ω
Power gain at f = 50 MHz	G_p		34,0 ± 1,0	dB
Slope cable equivalent f = 40 MHz to 330 MHz	SL		0,5 to 1,5	dB
Flatness of frequency response f = 40 MHz to 330 MHz	FL	max.	± 0,3	dB
Return losses at input and output f = 40 MHz to 330 MHz	$S_{11\text{-}22}$	min.	20	dB
Output voltage at $d_{im} = -60$ dB (DIN 45004B, par. 6.3: 3-tone)	V_o	min.	64	dBmV
2nd order distortion at channel R $V_o = 50$ dBmV on channel 2 and 13	d_2	max.	−70	dB
Composite triple beat 32 channels $V_o = 46$ dBmV	CTB	⩽	−67	dB
Output capability $X_{mod} = -57$ dB; 32 channels flat	V_o	min.	50	dBmV
Noise figure f = 40 MHz to 330 MHz	F	max.	6	dB
D.C. supply voltage	$+V_B$	=	24	V*
Total d.c. current consumption at $V_B = +24$ V	I_{tot}	typ.	320	mA
Operating mounting base temperature	T_{mb}		−20 to + 90	°C

MECHANICAL DATA

SOT-115 (see Fig. 1).

---

* The module normally operates at $V_B = 24$ V, but is able to withstand supply transients up to 30 V.

MECHANICAL DATA

Dimensions in mm

Fig. 1 SOT-115.

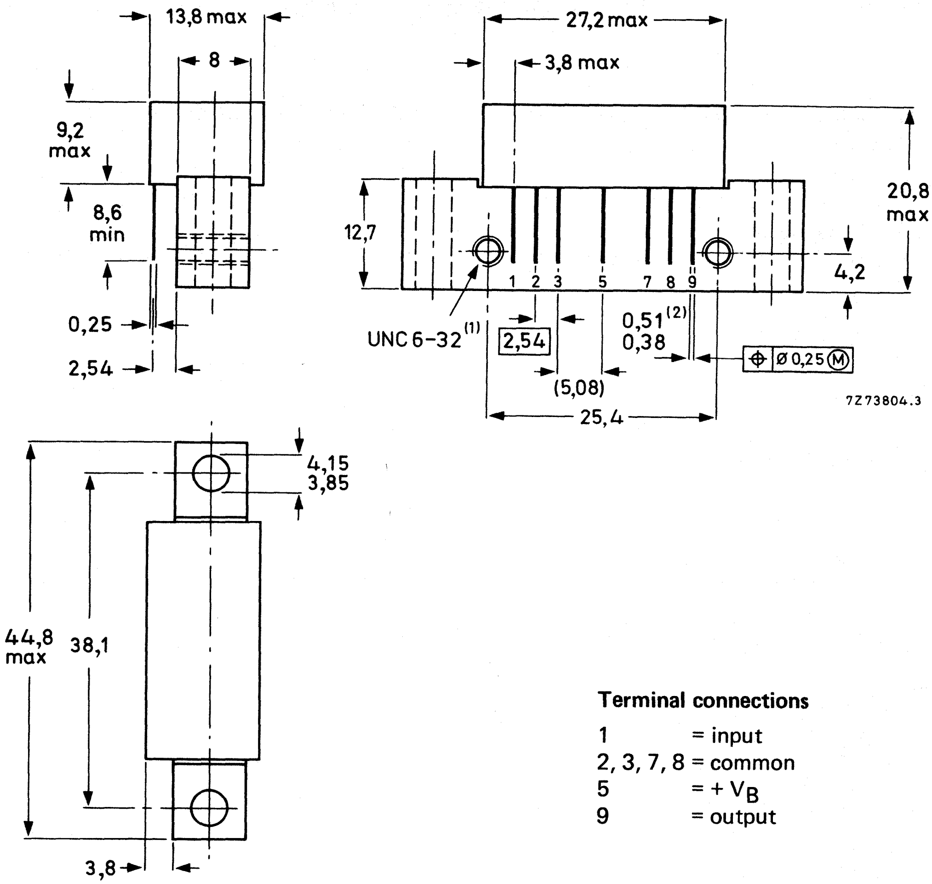

Terminal connections

1 = input
2, 3, 7, 8 = common
5 = + V_B
9 = output

(1) Screw 6-32UNC-2A available upon request (see "Accessories").
(2) Leads gold-plated.

→ See 'Mounting and Soldering Recommendations'.

RATINGS

Limiting values in accordance with the Absolute Maximum System (IEC 134)

R.F. input voltage	V_i	max.	55 dBmV
Storage temperature	T_{stg}		−40 to + 100 °C
Operating mounting base temperature	T_{mb}		−20 to + 90 °C

CHARACTERISTICS

Supply voltage $V_B = +24$ V; $T_{amb} = 25$ °C

Power gain at f = 50 MHz	G_p		34,0 ± 1,0 dB
Slope cable equivalent f = 40 MHz to 330 MHz	SL		0,5 to 1,5 dB
Flatness of frequency response f = 40 MHz to 330 MHz	FL	max.	± 0,3 dB
Return losses at input and output $Z_S = Z_L = 75\ \Omega$; f = 40 MHz to 330 MHz	$S_{11\text{-}22}$	min.	20 dB
Output voltage at $d_{im} = -60$ dB (DIN 45004, 6.3: 3-tone) $V_p = V_o$; $f_p = 287{,}25$ MHz $V_q = V_o - 6$ dB; $f_q = 294{,}25$ MHz $V_r = V_o - 6$ dB; $f_r = 296{,}25$ MHz Measured at $f_{(p+q-r)} = 285{,}25$ MHz	V_o	min.	64 dBmV
2nd order distortion $V_o = 50$ dBmV; channel 2 $V_o = 50$ dBmV; channel 13 Measured at channel R	d_2	max.	−70 dB
Composite triple beat 32 channels $V_o = 46$ dBmV; channel W	CTB	max.	−67 dB
Composite triple beat 40 channels $V_o = 46$ dBmV; channel W	CTB	max.	−63 dB
Output capability on channel W $X_{mod} = -57$ dB; 32 channels flat	V_o	min.	50 dBmV
$X_{mod} = -57$ dB; 40 channels flat	V_o	min.	49,5 dBmV
Noise figure f = 40 MHz to 330 MHz	F	max.	6 dB
Total d.c. current consumption	I_{tot}	typ. max.	320 mA 340 mA

HYBRID V.H.F. PUSH-PULL AMPLIFIER MODULE

Hybrid amplifier module intended for CATV systems up to 300 MHz.

QUICK REFERENCE DATA

Frequency range	f		40 to 300	MHz
Source impedance and load impedance	$Z_S = Z_L$	=	75	Ω
Power gain at f = 50 MHz	G_p		38,5 ±1,0	dB
Slope cable equivalent f = 40 MHz to 300 MHz	SL		0 to + 1,5	dB
Flatness of frequency response f = 40 MHz to 300 MHz	FL	max.	± 0,3	dB
Return losses at input and output f = 40 MHz to 300 MHz	$S_{11\text{-}22}$	min.	18	dB
Output voltage at d_{im} = −60 dB (DIN45004B, par. 6,3: 3-tone)	V_o	min.	64	dBmV
2nd harmonic distortion at V_o = 50 dBmV	d_2	max.	−68	dB
Noise figure f = 40 MHz to 300 MHz	F	max.	6	dB
D.C. supply voltage	$+V_B$	=	24	V*
Total d.c. current consumption at V_B = +24 V	I_{tot}	typ.	320	mA
Operating mounting base temperature	T_{mb}		−20 to +90	°C

MECHANICAL DATA

SOT-115 (see Fig. 1).

---

* The module normally operates at V_B = 24 V, but is able to withstand supply transients up to 30 V.

MECHANICAL DATA

Dimensions in mm

Fig. 1 SOT-115.

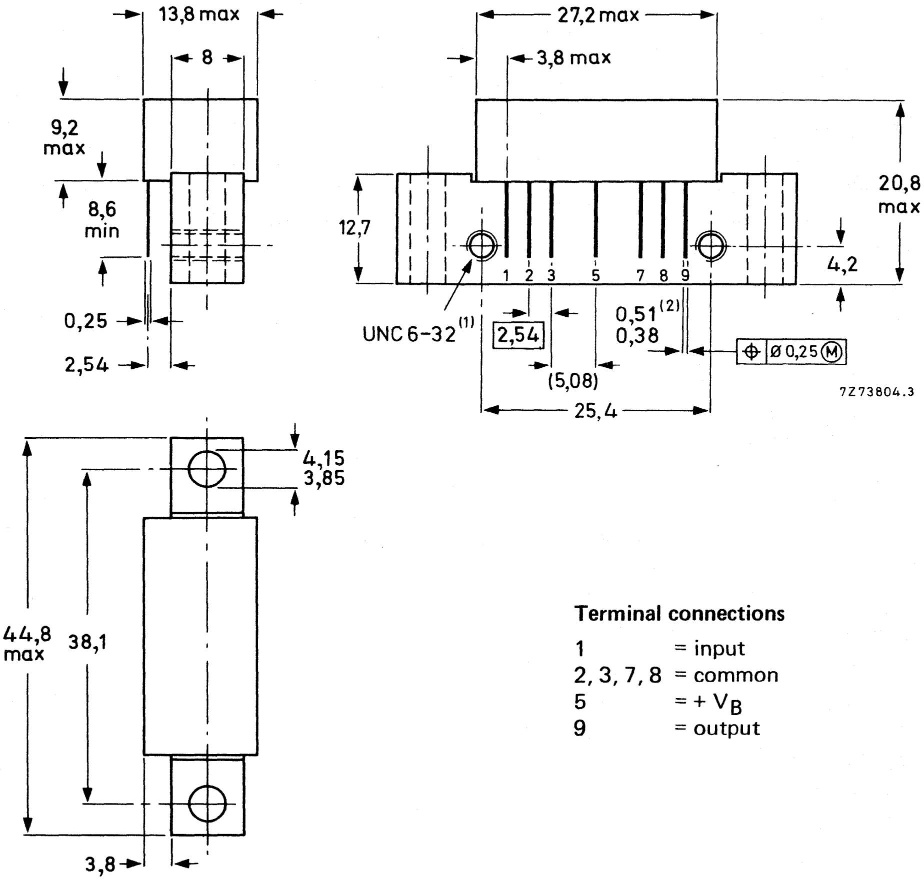

Terminal connections

1 = input
2, 3, 7, 8 = common
5 = + V_B
9 = output

(1) Screw 6-32UNC-2A available upon request (see "Accessories").

→ (2) Leads tin-plated. Gold-plated leads available upon request.

→ See "Mounting and Soldering Recommendations".

RATINGS

Limiting values in accordance with the Absolute Maximum System (IEC 134)

R.F. input voltage	V_i	max.	53 dBmV
Storage temperature	T_{stg}		−40 to + 100 °C
Operating mounting base temperature	T_{mb}		−20 to +90 °C

CHARACTERISTICS

Supply voltage $V_B = +24$ V; $T_{amb} = 25$ °C

Power gain at f = 50 MHz	G_p		38,5 ± 1,0 dB
Slope cable equivalent f = 40 MHz to 300 MHz	SL		0 to + 1,5 dB
Flatness of frequency response f = 40 MHz to 300 MHz	FL	max.	± 0,3 dB
Return losses at input and output $Z_S = Z_L = 75\ \Omega$; f = 40 MHz to 300 MHz	$S_{11\text{-}22}$	min.	18 dB
Output voltage at $d_{im} = -60$ dB (DIN45004B, par. 6.3: 3-tone) $V_p = V_o$; $f_p = 287{,}25$ MHz $V_q = V_o -6$ dB; $f_q = 294{,}25$ MHz $V_r = V_o -6$ dB; $f_r = 296{,}25$ MHz Measured at $f_{(p+q-r)} = 285{,}25$ MHz	V_o	min.	64 dBmV
2nd harmonic distortion $V_p = V_o = 50$ dBmV; $f_p = 55{,}25$ MHz $V_q = V_o = 50$ dBmV; $f_q = 211{,}25$ MHz Measured at $f_{(p+q)} = 266{,}5$ MHz	d_2	max.	−68 dB
Noise figure f = 40 MHz to 300 MHz	F	max.	6 dB
Total d.c. current consumption	I_{tot}	typ. max.	320 mA 340 mA

HYBRID V.H.F. PUSH-PULL AMPLIFIER MODULE

Interstage hybrid amplifier module intended for CATV systems up to 300 MHz. The inputs and outputs of the stages have been terminated separately.

QUICK REFERENCE DATA for total amplifier unless otherwise specified

Frequency range	f		40 to 300		MHz
Source impedance and load impedance	$Z_S = Z_L$	=	75		Ω
Power gain at f = 50 MHz	G_p		33,5 ± 1,0		dB
Slope cable equivalent f = 40 MHz to 300 MHz	SL		+ 0,5 to + 1,5		dB
Flatness of frequency response f = 40 MHz to 300 MHz	FL	max.	± 0,3		dB
			pre-stage	**final stage**	
Return losses at input and output f = 40 MHz to 300 MHz	s_{11}	min.	20	18	dB
	s_{22}	min.	18	20	dB
Output voltage at d_{im} = −60 dB (DIN45004B, par. 6.3: 3-tone)	V_o	min.	64		dBmV
2nd harmonic distortion at V_o = 50 dBmV	d_2	max.	−66		dB
Noise figure f = 40 MHz to 300 MHz	F	max.	6		dB
D.C. supply voltage	$+V_B$	=	24		V*
Total d.c. current consumption at V_B = +24 V	I_{tot}	typ.	320		mA
Operating mounting base temperature	T_{mb}		−20 to +90		°C

MECHANICAL DATA

SOT-115 (see Fig. 1).

---

* The module normally operates at V_B = 24 V, but is able to withstand supply transients up to 30 V.

MECHANICAL DATA

Dimensions in mm

Fig. 1 SOT-115.

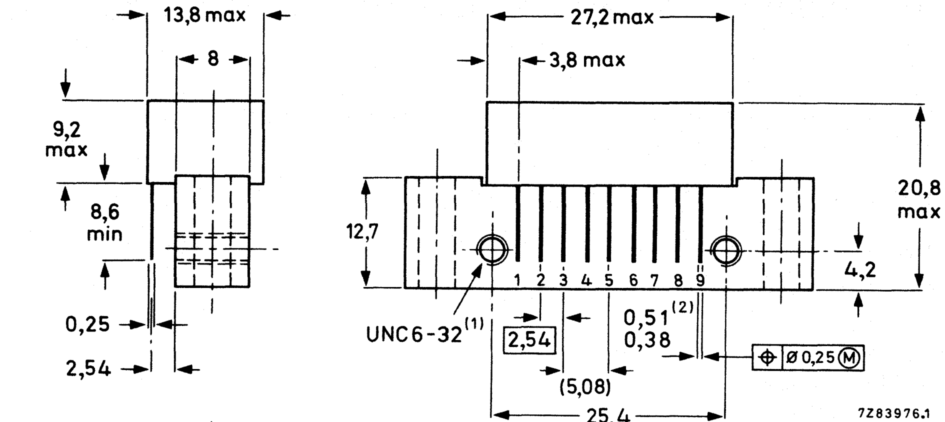

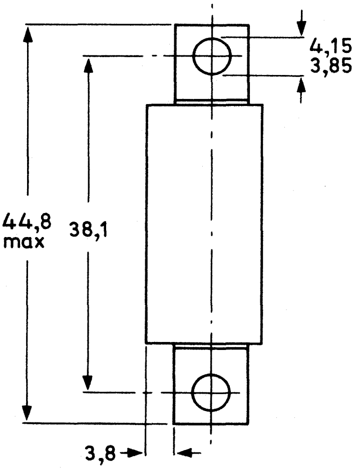

Terminal connections

1 = input pre-stage
2, 3 = common
4 = output pre-stage
5 = +V_B
6 = input final stage
7, 8 = common
9 = output final stage

(1) Screw 6-32UNC-2A available upon request (see "Accessories").

→ (2) Leads tin-plated. Gold-plated leads available on request.

→ See "Mounting and Soldering Recommendations".

RATINGS

Limiting values in accordance with the Absolute Maximum System (IEC 134)

R.F. input voltage total amplifier	V_i	max.	55	dBmV	←
Storage temperature	T_{stg}		−40 to + 100	°C	
Operating mounting base temperature	T_{mb}		−20 to + 90	°C	

CHARACTERISTICS for total amplifier unless otherwise specified.

Supply voltage $V_B = +24$ V; $T_{amb} = 25\,^{\circ}C$

Power gain at f = 50 MHz	G_p		33,5 ± 1,0	dB
Slope cable equivalent f = 40 MHz to 300 MHz	SL		+ 0,5 to + 1,5	dB
Flatness of frequency response f = 40 MHz to 300 MHz	FL	max.	± 0,3	dB

			pre-stage	final stage	
Return losses at input and output $Z_S = Z_L = 75\ \Omega$; f = 40 MHz to 300 MHz	s_{11}	min.	20	18	dB
	s_{22}	min.	18	20	dB

Output voltage at $d_{im} = -60$ dB (DIN45004B, par. 6.3: 3-tone) $V_p = V_o$; $f_p = 287{,}25$ MHz $V_q = V_o - 6$ dB; $f_q = 294{,}25$ MHz $V_r = V_o - 6$ dB; $f_r = 296{,}25$ MHz Measured at $f_{(p+q-r)} = 285{,}25$ MHz	V_o	min.	64	dBmV	
2nd harmonic distortion $V_p = V_o = 50$ dBmV; $f_p = 55{,}25$ MHz $V_q = V_o = 50$ dBmV; $f_q = 211{,}25$ MHz Measured at $f_{(p+q)} = 266{,}5$ MHz	d_2	max.	−66	dB	←
Noise figure f = 40 MHz to 300 MHz	F	max.	6	dB	
Total d.c. current consumption	I_{tot}	typ.	320	mA	
		max.	340	mA	

CATV AMPLIFIER MODULE

Hybrid amplifier module for use in CATV systems and operating at frequencies from 5 MHz to 200 MHz. The device is intended as a reverse amplifier for use in two-way systems.

QUICK REFERENCE DATA

Frequency range	f		5 to 200	MHz
Source impedance and load impedance	$Z_S = Z_L$		75	Ω
Power gain at f = 10 MHz	G_p		13,0 ± 0,5	dB
Slope cable equivalent f = 5 MHz to 200 MHz	SL		−0,2 to + 0,5	dB
Flatness of frequency response f = 5 MHz to 200 MHz	FL	max.	± 0,2	dB
Return losses at input and output f = 5 MHz to 200 MHz	$S_{11\text{-}22}$	min.	20	dB
Output voltage at d_{im} = −60 dB; measured at 33,25 MHz (DIN 45004B, par. 6.3: 3-tone)	V_o	min.	67	dBmV
2nd-order distortion V_o = 50 dBmV	d_2	max.	−72	dB
Composite triple beat; 22 channels V_o = 50 dBmV	CTB	max.	−68	dB
Cross modulation at 22 channels V_o = 50 dBmV	X_{mod}	max.	−61	dB
Noise figure f = 200 MHz	F	max.	7	dB
D.C. supply voltage	$+V_B$	=	24	V*
Total d.c. current consumption V_B = + 24 V	I_{tot}	typ.	215	mA ←
Operating mounting base temperature	T_{mb}		−20 to + 90	°C

MECHANICAL DATA

SOT-115 (see Fig. 1).

---

* The module normally operates at V_B = 24 V, but is able to withstand supply transient up to 30 V.

MECHANICAL DATA

Dimensions in mm

Fig. 1 SOT-115.

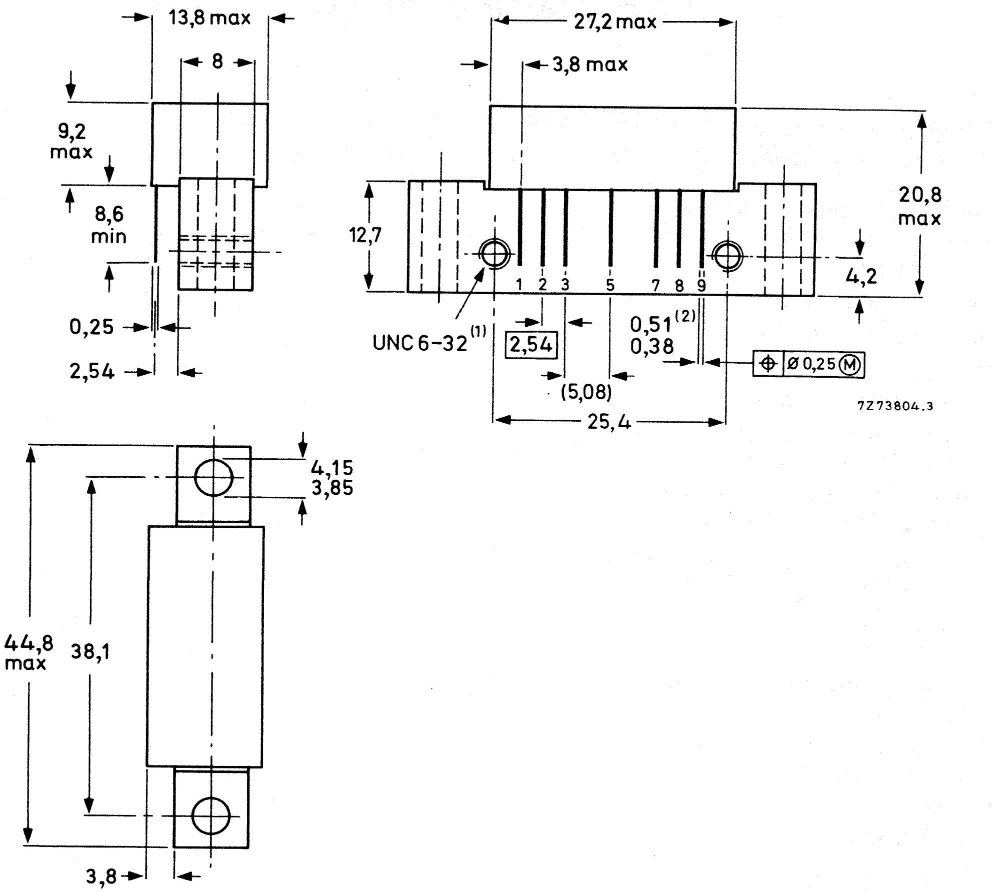

(1) Screw 6-32UNC-2A available upon request (see "Accessories").

(2) Leads gold-plated.

→ See "Mounting and Soldering Recommendations".

RATINGS

Limiting values in accordance with the Absolute Maximum System (IEC 134)

R.F. input voltage	V_i	max. 67	dBmV
Storage temperature	T_{stg}	−40 to + 100	°C
Operating mounting base temperature	T_{mb}	−20 to + 90	°C

CHARACTERISTICS at T_{mb} = 30 °C unless otherwise specified

Supply voltage V_B = + 24 V

Power gain at f = 10 MHz	G_p		13,0 ± 0,5	dB	
Slope cable equivalent f = 5 MHz to 200 MHz	SL		−0,2 to + 0,5	dB	
Flatness of frequency response f = 5 MHz to 200 MHz	FL	max.	± 0,2	dB	
Return losses at input and output $Z_S = Z_L = 75\ \Omega$; f = 5 MHz to 200 MHz	$S_{11\text{-}22}$	min.	20	dB	
Output voltage at d_{im} = −60 dB (DIN 45004B, par. 6.3: 3-tone) $V_p = V_o$; f_p = 35,25 MHz $V_q = V_o$ −6 dB; f_q = 42,25 MHz $V_r = V_o$ − 6 dB; f_r = 44,25 MHz Measured at $f_{(p+q-r)}$ = 33,25 MHz	V_o	min.	67	dBmV	
Output voltage at d_{im} = −60 dB (DIN 45004B, par. 6.3: 3-tone) $V_p = V_o$; f_p = 187,25 MHz $V_q = V_o$ −6 dB; f_q = 194,25 MHz $V_r = V_o$ −6 dB; f_r = 196,25 MHz Measured at $f_{(p+q-r)}$ = 185,25 MHz	V_o	min.	64	dBmV	
2nd-order distortion V_o = 50 dBmV; f_p = 83,25 MHz V_o = 50 dBmV; f_q = 109,25 MHz Measured at $f_{(p+q)}$ = 192,5 MHz	d_2	max.	−72	dB	←
Composite triple beat on 22 channels V_o = 50 dBmV; measured in channel 7	CTB	max.	−68	dB	
Cross modulation at 22 channels V_o = 50 dBmV; measured in channel 2	X_{mod}	max.	−61	dB	
Noise figure f = 200 MHz	F	max.	7,0	dB	
Total d.c. current consumption	I_{tot}	typ. max.	215 230	mA mA	←

CATV REVERSE AMPLIFIER MODULE

Hybrid amplifier module for use in CATV systems and operating at frequencies from 5 MHz to 200 MHz. This device is intended as a reverse amplifier for use in two-way systems.

QUICK REFERENCE DATA

Frequency range	f		5 to 200	MHz
Source impedance and load impedance	$Z_S = Z_L$		75	Ω
Power gain at f = 10 MHz	G_p		18,5 ± 0,5	dB
Slope cable equivalent f = 5 MHz to 200 MHz	SL		−0,2 to + 0,5	dB
Flatness of frequency response f = 5 MHz to 200 MHz	FL	max.	± 0,2	dB
Return losses at input and output f = 5 MHz to 200 MHz	$S_{11\text{-}22}$	min.	20	dB
Output voltage at d_{im} = −60 dB; measured at 33,25 MHz (DIN 45004B, par. 6.3: 3-tone)	V_o	min.	67	dBmV
2nd-order distortion V_o = 50 dBmV	d_2	max.	−72	dB
Composite triple beat; 22 channels V_o = 50 dBmV	CTB	max.	−68	dB
Cross modulation at 22 channels V_o = 50 dBmV	X_{mod}	max.	−61	dB
Noise figure f = 200 MHz	F	max.	5,5	dB
D.C. supply voltage	$+V_B$	=	24	V*
Total d.c. current consumption V_B = + 24 V	I_{tot}	typ.	215	mA ←
Operating mounting base temperature	T_{mb}		−20 to + 90	°C

MECHANICAL DATA

SOT-115 (see Fig. 1).

---

* The module normally operates at V_B = 24 V, but is able to withstand supply transients up to 30 V.

MECHANICAL DATA

Dimensions in mm

Fig. 1 SOT-115.

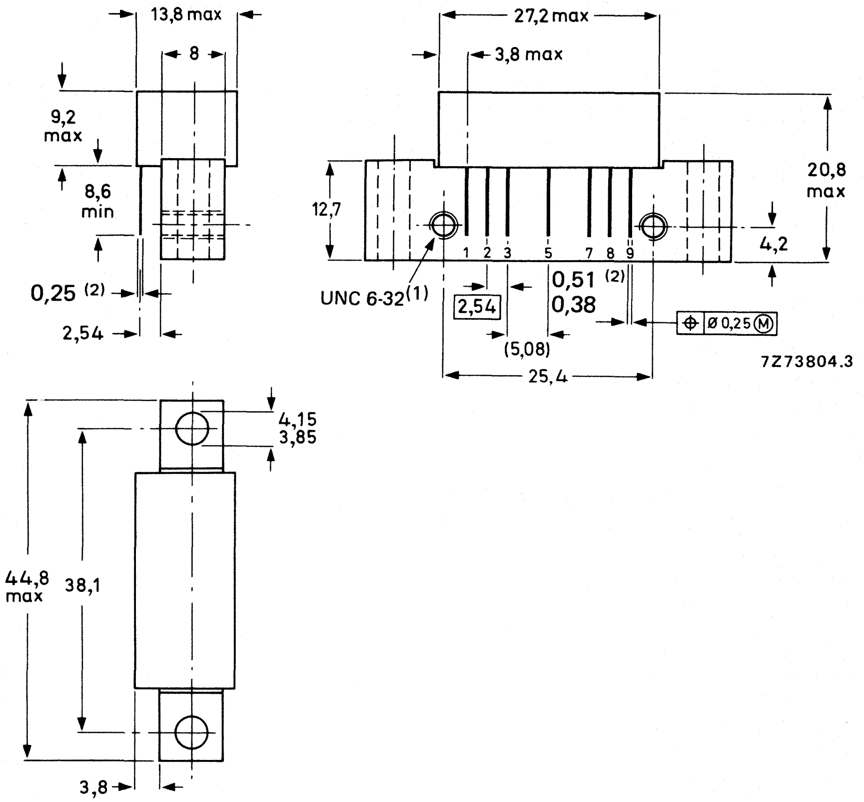

(1) Screw 6-32UNC-2A available upon request (see "Accessories").

(2) Leads gold-plated.

→ See "Mounting and Soldering Recommendations".

RATINGS

Limiting values in accordance with the Absolute Maximum System (IEC 134)

R.F. input voltage	V_i	max.	65 dBmV
Storage temperature	T_{stg}	−40 to + 100	°C
Operating mounting base temperature	T_{mb}	−20 to + 90	°C

CHARACTERISTICS

Supply voltage $V_B = +24$ V at $T_{mb} = 30\ ^{\circ}C$ unless otherwise specified

Power gain at f = 10 MHz	G_p		18,5 ± 0,5	dB	
Slope cable equivalent f = 5 MHz to 200 MHz	SL		−0,2 to + 0,5	dB	
Flatness of frequency response f = 5 MHz to 200 MHz	FL	max.	± 0,2	dB	
Return losses at input and output $Z_S = Z_L = 75\ \Omega$; f = 5 MHz to 200 MHz	$S_{11\text{-}22}$	min.	20	dB	
Output voltage at $d_{im} = -60$ dB (DIN 45004B; par. 6.3: 3-tone) $V_p = V_o$; $f_p = 33{,}25$ MHz $V_q = V_o - 6$ dB; $f_q = 42{,}25$ MHz $V_r = V_o - 6$ dB; $f_r = 44{,}25$ MHz Measured at $f_{(p+q)} = 33{,}25$ MHz	V_o	min.	67	dBmV	
Output voltage at $d_{im} = -60$ dB (DIN 45004B; par. 6.3: 3-tone) $V_p = V_o$; $f_p = 187{,}25$ MHz $V_q = V_o - 6$ dB; $f_q = 194{,}25$ MHz $V_r = V_o - 6$ dB; $f_r = 196{,}25$ MHz Measured at $f_{(p+q-r)} = 185{,}25$ MHz	V_o	min.	64	dBmV	
2nd-order distorion $V_o = 50$ dBmV; $f_p = 83{,}25$ MHz $V_o = 50$ dBmV; $f_q = 109{,}25$ MHz Measured at $f_{(p+q)} = 192{,}5$ MHz	d_2	max.	−72	dB	←
Composite triple beat at 22 channels $V_o = 50$ dBmV; measured in channel 7	CTB	max.	−68	dB	
Cross modulation at 22 channels $V_o = 50$ dBmV; measured in channel 2	X_{mod}	max.	−61	dB	
Noise figure f = 200 MHz	F	max.	5,5	dB	
Total d.c. current consumption	I_{tot}	typ. max.	215 230	mA mA	←

CATV REVERSE AMPLIFIER MODULE

Hybrid amplifier module for use in CATV systems and operating at frequencies from 5 MHz to 200 MHz. The device is intended as a reverse amplifier for use in two-way systems.

QUICK REFERENCE DATA

Frequency range	f		5 to 200	MHz
Source impedance and load impedance	$Z_S = Z_L$		75	Ω
Power gain at f = 10 MHz	G_p		22,0 ± 0,5	dB
Slope cable equivalent f = 5 MHz to 200 MHz	SL		−0,2 to + 0,5	dB
Flatness of frequency response f = 5 MHz to 200 MHz	FL	max.	± 0,2	dB
Return losses at input and output f = 5 MHz to 200 MHz	$S_{11\text{-}22}$	min.	20	dB
Output voltage at d_{im} = −60 dB; measured at 33,25 MHz (DIN 45004B, par. 6.3: 3-tone)	V_o	min.	67	dBmV
2nd-order distortion V_o = 50 dBmV	d_2	max.	−67	dB
Composite triple beat; 22 channels V_o = 50 dBmV	CTB	max.	−67	dB
Cross modulation at 22 channels V_o = 50 dBmV	X_{mod}	max.	−60	dB
Noise figure f = 200 MHz	F	max.	5,5	dB
D.C. supply voltage	$+V_B$	=	24	V*
Total d.c. current consumption V_B = + 24 V	I_{tot}	typ.	215	mA ←
Operating mounting base temperature	T_{mb}		−20 to + 90	°C

MECHANICAL DATA

Sot-115 (see Fig. 1).

---

* The module normally operates at V_B = 24 V, but is able to withstand supply transients up to 30 V.

MECHANICAL DATA Dimensions in mm

Fig. 1 SOT-115.

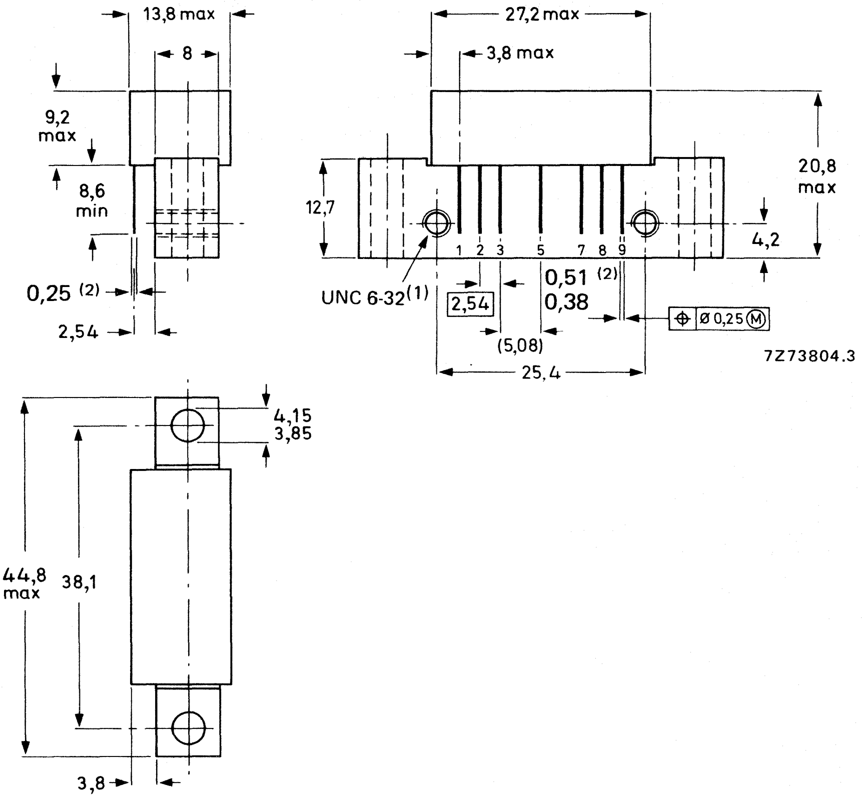

(1) Screw 6-32UNC-2A available upon request (see "Accessories").

(2) Leads gold-plated.

→ See 'Mounting and Soldering Recommendations'.

RATINGS

Limiting values in accordance with the Absolute Maximum System (IEC 134)

R.F. input voltage	V_i	max.	65	dBmV
Storage temperature	T_{stg}		−40 to +100	°C
Operating mounting base temperature	T_{mb}		−20 to +90	°C

CHARACTERISTICS at T_{mb} = 30 °C unless otherwise specified

Supply voltage V_B = + 24 V

Power gain at f = 10 MHz	G_p		22,0 ± 0,5	dB	
Slope cable equivalent f = 5 MHz to 200 MHz	SL		−0,2 to + 0,5	dB	
Flatness of frequency response f = 5 MHz to 200 MHz	FL	max.	± 0,2	dB	
Return losses at input and output $Z_S = Z_L = 75\ \Omega$; f = 5 MHz to 200 MHz	$S_{11\text{-}22}$	min.	20	dB	
Output voltage at d_{im} = −60 dB (DIN 45004B, par. 6.3: 3-tone) $V_p = V_o$; f_p = 33,25 MHz $V_q = V_o$ −6 dB; f_q = 42,25 MHz $V_r = V_o$ −6 dB; f_r = 44,25 MHz Measured at $f_{(p+q-r)}$ = 33,25 MHz	V_o	min.	67	dBmV	
Output voltage at d_{im} = −60 dB (DIN 45004B, par. 6.3: 3-tone) $V_p = V_o$; f_p = 187,25 MHz $V_q = V_o$ −6 dB; f_q = 194,25 MHz $V_r = V_o$ −6 dB; f_r = 196,25 MHz Measured at $f_{(p+q-r)}$ = 185,25 MHz	V_o	min.	64	dBmV	
2nd-order distortion V_o = 50 dBmV; f_p = 83,25 MHz V_o = 50 dBmV; f_q = 109,25 MHz Measured at $f_{(p+q)}$ = 192,5 MHz	d_2	max.	−67	dB	←
Composite triple beat at 22 channels V_o = 50 dBmV; measured on channel 7	CTB	max.	−67	dB	
Cross modulation at 22 channels V_o = 50 dBmV; measured in channel 2	X_{mod}	max.	−60	dB	
Noise figure f = 200 MHz	F	max.	5,5	dB	
Total d.c. current consumption	I_{tot}	typ. max.	215 230	mA mA	←

CATV AMPLIFIER MODULE

Hybrid amplifier module for use in CATV systems and operating at frequencies from 5 MHz to 200 MHz. This device is intended as a reverse amplifier for use in two-way systems.

QUICK REFERENCE DATA

Frequency range	f	5	to	200	MHz	
Source impedance and load impedance	$Z_S = Z_L$			75	Ω	
Power gain at f = 10 MHz	G_p	24,0	±	0,5	dB	
Slope cable equivalent f = 5 MHz to 200 MHz	SL	–0,2	to	+ 0,5	dB	
Flatness of frequency response f = 5 MHz to 200 MHz	FL	max.		+ 0,2	dB	
Return losses at input and output f = 5 MHz to 200 MHz	$S_{11\text{-}22}$	min.		20	dB	
Output voltage at d_{im} = –60 dB; measured at 33,25 MHz (DIN 45004B, par. 6,3: 3-tone)	V_o	min.		67	dBmV	
2nd-order distortion V_o = 50 dBmV	d_2	max.		–67	dB	
Composite triple beat; 22 channels V_o = 50 dBmV	CTB	max.		–67	dB	
Cross modulation at 22 channels V_o = 50 dBmV	X_{mod}	max.		–59	dB	
Noise figure f = 200 MHz	F	max.		5,5	dB	
D.C. supply voltage	$+V_B$	=		24	V*	
Total d.c. current consumption V_B = + 24 V	I_{tot}	typ.		215	mA	←
Operating mounting base temperature	T_{mb}	–20	to	+ 90	°C	

MECHANICAL DATA

SOT-115 (see Fig. 1).

---

* The module normally operates at V_B = 24 V, but is able to withstand supply transients up to 30 V.

MECHANICAL DATA

Dimensions in mm

Fig. 1 SOT-115.

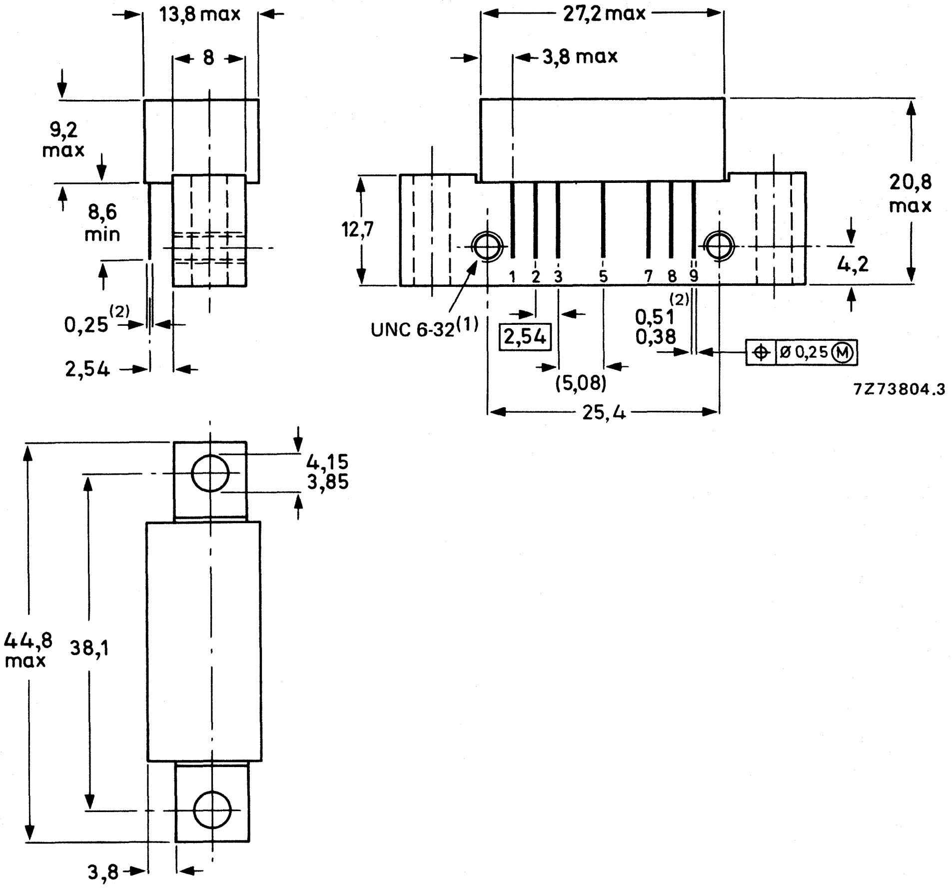

(1) Screw 6-32UNC-2A available upon request (see Accessories").
(2) Leads available in gold-plated and tin-plated execution.

→ See 'Mounting and Soldering Recommendations'.

RATINGS

Limiting values in accordance with the Absolute Maximum System (IEC 134)

R.F. input voltage	V_i	max. 63	dBmV
Storage temperature	T_{stg}	−40 to +100	°C
Operating mounting base temperature	T_{mb}	−20 to +90	°C

CHARACTERISTICS at T_{mb} = 30 °C unless otherwise specified

Supply voltage V_B = + 24 V

Power gain at f = 10 MHz	G_p		24,0 ± 0,5	dB
Slope cable equivalent f = 5 MHz to 200 MHz	SL		−0,2 to + 0,5	dB
Flatness of frequency response f = 5 MHz to 200 MHz	FL	max.	± 0,2	dB
Return losses at input and output $Z_S = Z_L$ = 75 Ω; f = 5 MHz to 200 MHz	$S_{11\text{-}22}$	min.	20	dB
Output voltage at d_{im} = −60 dB (DIN 45004B, par. 6,3: 3-tone) $V_p = V_o$; f_p = 35,25 MHz $V_q = V_o$ −6 dB; f_q = 42,25 MHz $V_r = V_o$ −6 dB; f_r = 44,25 MHz Measured at $f_{(p+q-r)}$ = 33,25 MHz	V_o	min.	67	dBmV
Output voltage at d_{im} = −60 dB (DIN 45004B, par. 6,3: 3-tone) $V_p = V_o$; f_p = 187,25 MHz $V_q = V_o$ −6 dB; f_q = 194,25 MHz $V_r = V_o$ −6 dB; f_r = 196,25 MHz Measured at $f_{(p+q-r)}$ = 185,25 MHz	V_o	min.	64	dBmV
2nd order distortion V_o = 50 dBmV; f_p = 83,25 MHz V_o = 50 dBmV; f_q = 109,25 MHz Measured at $f_{(p+q)}$ = 192,5 MHz	d_2	max.	−67	dB
Composite triple beat at 22 channels V_o = 50 dBmV; measured on channel 7	CTB	max.	−67	dB
Cross modulation at 22 channels V_o = 50 dBmV; measured in channel 2	X_{mod}	max.	−59	dB
Noise figure f = 200 MHz	F	max.	5,5	dB
Total d.c. current consumption	I_{tot}	typ. max.	215 230	mA mA

CATV AMPLIFIER MODULES

Hybrid amplifier modules for CATV systems operating at frequencies up to 450 MHz.

BGY70: 12,5 dB input amplifier module;
BGY71: 12,5 dB output amplifier module.

Features:
- excellent linearity;
- extremely low noise;
- optimal reliability ensured by TiPtAu metallized crystals, silicon nitride passivation and rugged construction.

QUICK REFERENCE DATA

			BGY70	BGY71	
Frequency range	f		40 to 450	40 to 450	MHz
Source impedance and load impedance	$Z_S = Z_L$	=	75	75	Ω
Power gain at f = 50 MHz	G_p		12,5 ± 0,4	12,5 ± 0,4	dB
Slope cable equivalent f = 40 MHz to 450 MHz	SL		0,5 to 2	0,5 to 2	dB
Flatness of frequency response f = 40 MHz to 450 MHz	FL	max.	± 0,2	± 0,2	dB
Return losses at input and output f = 40 MHz to 450 MHz	$S_{11\text{-}22}$	min.	18	18	dB
Output voltage at $d_{im} = -60$ dB (DIN 45004B, par. 6.3: 3-tone)	V_o	min.	62,5	65	dBmV
2nd order distortion at channel R $V_o = 50$ dBmV on channel 2 and 13	d_2	min.	–71	–73	dB
Composite triple beat 52 channels $V_o = 46$ dBmV	CTB		–55	–59	dB
Output capability $X_{mod} = -57$ dB; 52 channels flat	V_o		46,5	49,5	dBmV
Noise figure f = 40 MHz to 450 MHz	F	max.	7,5	8,5	dB
D.C. supply voltage	$+V_B$	=	24	24	V*
Total d.c. current consumption at $V_B = +24$ V	I_{tot}	typ.	160	200	mA
Operating mounting base temperature	T_{mb}		–20 to + 90	–20 to + 90	°C

MECHANICAL DATA

SOT-115 (see Fig. 1).

---

* The modules normally operate at $V_B = 24$ V, but are able to withstand supply transients up to 30 V.

MECHANICAL DATA

Dimensions in mm

Fig. 1 SOT-115.

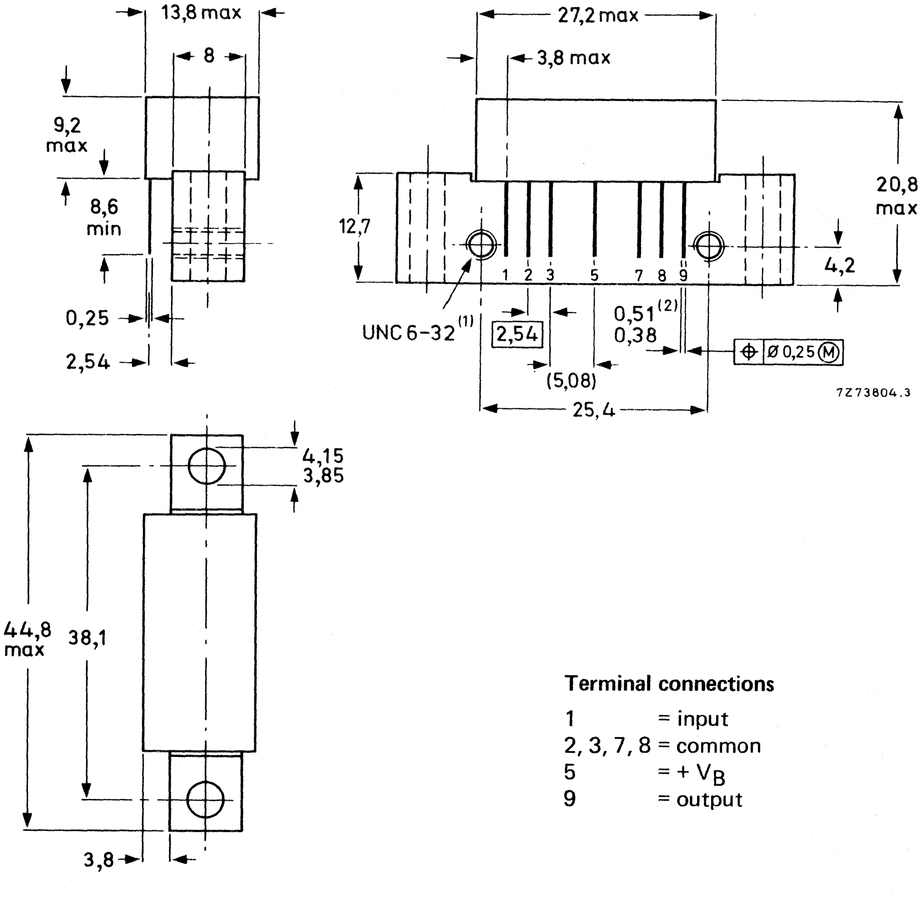

Terminal connections

1 = input
2, 3, 7, 8 = common
5 = + V_B
9 = output

(1) Screw 6-32UNC-2A available upon request (see "Accessories").
(2) Leads gold-plated.

→ See 'Mounting and Soldering Recommendations'.

RATINGS

Limiting values in accordance with the Absolute Maximum System (IEC 134)

R.F. input voltage	V_i	max.	67	dBmV
Storage temperature	T_{stg}		−40 to + 100	°C
Operating mounting base temperature	T_{mb}		−20 to + 90	°C

CHARACTERISTICS

Supply voltage $V_B = +24$ V; $T_{amb} = 25$ °C

			BGY70	BGY71	
Power gain at f = 50 MHz	G_p		12,5 ± 0,4	12,5 ± 0,4	dB
Slope cable equivalent f = 40 MHz to 450 MHz	SL		0,5 to 2	0,5 to 2	dB
Flatness of frequency response f = 40 MHz to 450 MHz	FL		± 0,2	± 0,2	dB
Return losses at input and output $Z_S = Z_L = 75\ \Omega$; f = 40 MHz to 450 MHz	$S_{11\text{-}22}$		18	18	dB
Output voltage at $d_{im} = -60$ dB (DIN 45004B, 6.3: 3-tone) $V_p = V_o$; $f_p = 387{,}25$ MHz $V_q = V_o - 6$ dB; $f_q = 394{,}25$ MHz $V_r = V_o - 6$ dB; $f_r = 396{,}25$ MHz Measured at $f_{(p+q-r)} = 385{,}25$ MHz	V_o	min.	61	63,5	dBmV
Output voltage at $d_{im} = -60$ dB (DIN 45004B, par. 6.3: 3-tone) $V_p = V_o$; $f_p = 287{,}25$ MHz $V_q = V_o - 6$ dB; $f_q = 294{,}25$ MHz $V_r = V_o - 6$ dB; $f_r = 296{,}25$ MHz Measured at $f_{(p+q-r)} = 285{,}25$ MHz	V_o	min.	62,5	65	dBmV
2nd order distortion $V_o = 50$ dBmV; channel 2 $V_o = 50$ dBmV; channel 13 Measured at channel R	d_2	max.	−71	−73	dB
$V_o = 50$ dBmV; channel G $V_o = 50$ dBmV; channel N Measured at channel H 14	d_2	typ.	−68	−70	dB
Composite triple beat 52 channels $V_o = 46$ dBmV; channel H 14	CTB		−55	−59	dB
Output capability on channel H 14 $X_{mod} = -57$ dB; 52 channels flat	V_o		46,5	49,5	dBmV
Noise figure f = 40 MHz to 450 MHz	F	max.	7,5	8,5	dB
Total d.c. current consumption	I_{tot}	typ.	160	200	mA
		max.	180	220	mA

CATV AMPLIFIER MODULES

Hybrid amplifier modules for CATV systems operating at frequencies up to 450 MHz.

BGY74: 17 dB input amplifier module;
BGY75: 17 dB output amplifier module.

Features:

- excellent linearity;
- extremely low noise;
- optimal reliability ensured by TiPtAu metallized crystals, silicon nitride passivation and rugged construction.

QUICK REFERENCE DATA

			BGY74	BGY75	
Frequency range	f		40 to 450	40 to 450	MHz
Source impedance and load impedance	$Z_S = Z_L$	=	75	75	Ω
Power gain at f = 50 MHz	G_p		17,0 ± 0,4	17,0 ± 0,4	dB
Slope cable equivalent f = 40 MHz to 450 MHz	SL		0,5 to 1,5	0,5 to 1,5	dB
Flatness of frequency response f = 40 MHz to 450 MHz	FL	max.	± 0,1	± 0,1	dB
Return losses at input and output f = 40 MHz to 450 MHz	$S_{11\text{-}22}$	min.	18	18	dB
Output voltage at d_{im} = –60 dB (DIN 45004B, par. 6.3: 3-tone)	V_o	min.	62,5	65	dBmV
2nd order distortion at channel R V_o = 50 dBmV on channel 2 and 13	d_2	max.	–71	–73	dB
Composite triple beat 52 channels V_o = 46 dBmV	CTB		–56	–60	dB
Output capability X_{mod} = –57 dB; 52 channels flat	V_o		46,5	49,5	dBmV
Noise figure f = 40 MHz to 450 MHz	F	max.	7	7,5	dB
D.C. supply voltage	$+V_B$	=	24	24	V*
Total d.c. current consumption at V_B = + 24 V	I_{tot}	typ.	180	200	mA
Operating mounting base temperature	T_{mb}		–20 to + 90	–20 to + 90	°C

MECHANICAL DATA

SOT-115 (see Fig. 1).

---

* The modules normally operate at V_B = 24 V, but are able to withstand supply transients up to 30 V.

MECHANICAL DATA

Dimensions in mm

Fig. 1 SOT-115.

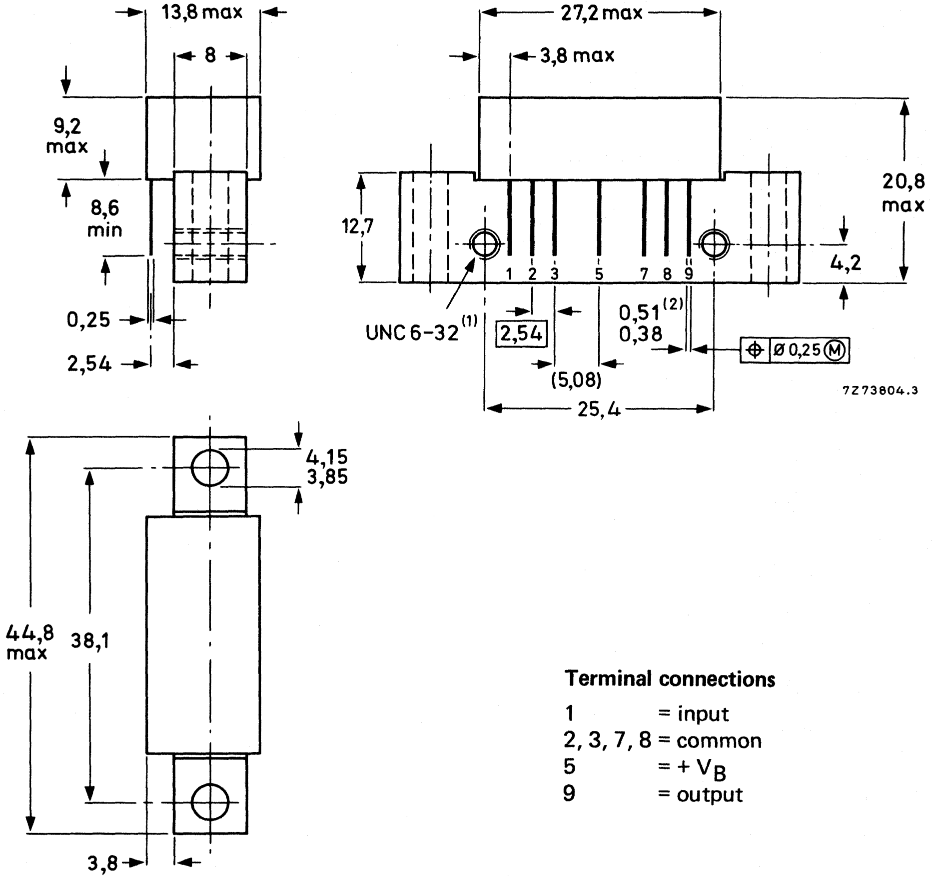

Terminal connections

1 = input
2, 3, 7, 8 = common
5 = + V_B
9 = output

(1) Screw 6-32UNC-2A available upon request (see "Accessories").
(2) Leads gold-plated.

→ See 'Mounting and Soldering Recommendations'.

RATINGS

Limiting values in accordance with the Absolute Maximum System (IEC 134)

R.F. input voltage	V_i	max.	65	dBmV
Storage temperature	T_{stg}	−40 to + 100		°C
Operating mounting base temperature	T_{mb}	−20 to + 90		°C

CHARACTERISTICS

Supply voltage V_B = + 24 V; T_{amb} = 25 °C

			BGY74	BGY75	
Power gain at f = 50 MHz	G_p		17,0 ± 0,4	17,0 ± 0,4	dB
Slope cable equivalent f = 40 MHz to 450 MHz	SL		0,5 to 1,5	0,5 to 1,5	dB
Flatness of frequency response f = 40 MHz to 450 MHz	FL	max.	± 0,1	± 0,1	dB
Return losses at input and output $Z_S = Z_L = 75\ \Omega$; f = 40 MHz to 450 MHz	$S_{11\text{-}22}$	min.	18	18	dB ←
Output voltage at d_{im} = −60 dB (DIN 45004B, 6.3: 3-tone) $V_p = V_o$; f_p = 387,25 MHz $V_q = V_o$−6 dB; f_q = 394,25 MHz $V_r = V_o$−6 dB; f_r = 396,25 MHz Measured at $f_{(p+q-r)}$ = 385,25 MHz	V_o	min.	61	63,5	dBmV
Output voltage at d_{im} = −60 dB (DIN 45004B, par. 6.3: 3-tone) $V_p = V_o$; f_p = 287,25 MHz $V_q = V_o$ −6 dB; f_q = 294,25 MHz $V_r = V_o$ −6 dB; f_r = 296,25 MHz Measured at $f_{(p+q-r)}$ = 285,25 MHz	V_o	min.	62,5	65	dBmV
2nd order distortion V_o = 50 dBmV; channel 2 V_o = 50 dBmV; channel 13 Measured at channel R	d_2	max.	−71	−73	dB
V_o = 50 dBmV; channel G V_o = 50 dBmV; channel N Measured at channel H 14	d_2	typ.	−68	−70	dB
Composite triple beat 52 channels V_o = 46 dBmV; channel H 14	CTB		−56	−60	dB
Output capability on channel H 14 X_{mod} = −57 dB; 52 channels flat	V_o		46,5	49,5	dBmV
Noise figure f = 40 MHz to 450 MHz	F	max.	7	7,5	dB
Total d.c. current consumption	I_{tot}	typ.	180	200	mA
		max.	200	220	mA

CATV AMPLIFIER MODULE

Hybrid amplifier module for use as 34 dB line extender in CATV systems operating at frequencies up to 450 MHz.

Features:

- excellent linearity;
- extremely low noise;
- optimum reliability ensured by TiPtAu metallized crystals, silicon nitride glass barrier and rugged construction.

QUICK REFERENCE DATA

Frequency range	f	40	to	450	MHz
Source impedance and load impedance	$Z_S = Z_L$			75	Ω
Power gain at f = 50 MHz	G_p	34,0	±	1,0	dB
Slope cable equivalent f = 40 MHz to 450 MHz	SL	0,5	to	2,5	dB
Flatness of frequency response f = 40 MHz to 450 MHz	FL	max.		± 0,3	dB
Return losses at input and output f = 40 MHz to 450 MHz	$S_{11\text{-}22}$	min.		18	dB
Output voltage at d_{im} = –60 dB (DIN 45004, par. 6.3: 3-tone)	V_o	min.		63,5	dBmV
2nd-order distortion at channel R V_o = 50 dBmV on channels 2 and 13	d_2	max.		–70	dB
Composite triple beat; 52 channels V_o = 46 dBmV	CTB			–59	dB
Output capability Xmod = –57 dB; 52 channels flat	V_o			47	dBmV
Noise figure f = 40 MHz to 450 MHz	F	max.		6	dB
D.C. supply voltage	$+V_B$	=		24	V*
Total d.c. current consumption V_B = +24 V	I_{tot}	typ.		320	mA
Operating mounting base temperature	T_{mb}	–20	to	+90	°C

MECHANICAL DATA

SOT-115 (see Fig. 1).

---

* The module normally operates at V_B = 24 V, but is able to withstand incidental supply transients up to 30 V.

MECHANICAL DATA

Dimensions in mm

Fig. 1 SOT-115.

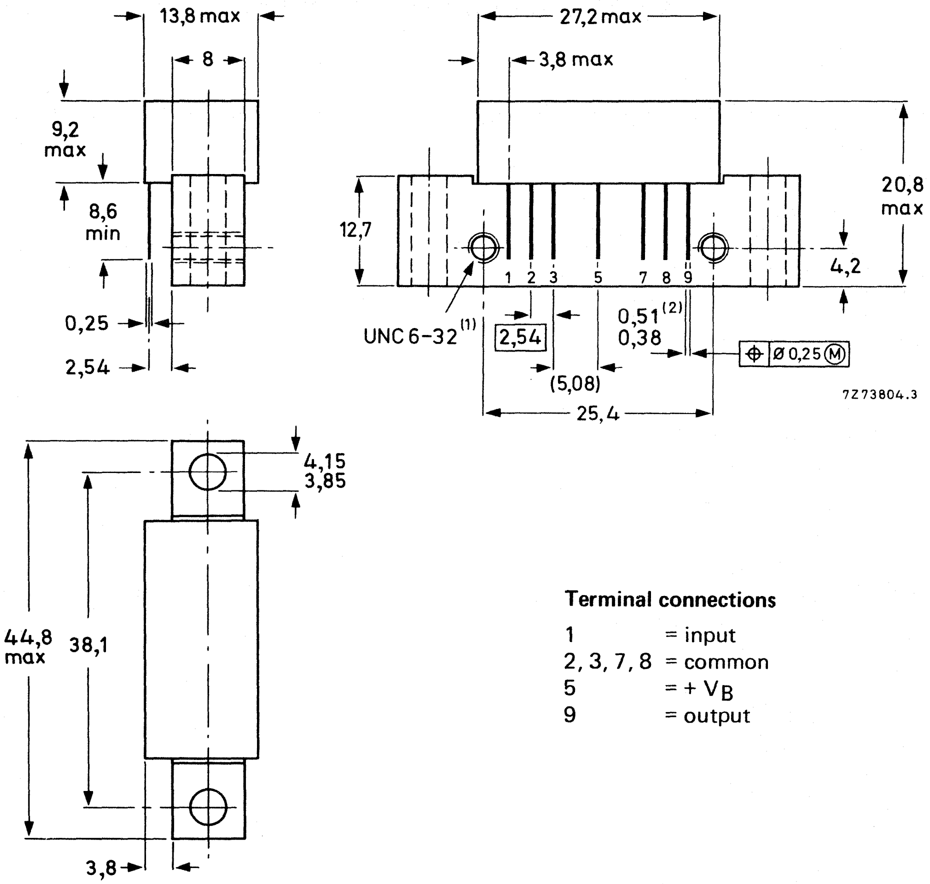

Terminal connections

1 = input
2, 3, 7, 8 = common
5 = + V_B
9 = output

(1) Screw 6-32UNC-2A available upon request (see "Accessories").
(2) Leads gold-plated.

→ See 'Mounting and Soldering Recommendations'.

RATINGS

Limiting values in accordance with the Absolute Maximum System (IEC 134)

R.F. input voltage	V_i	max. 55	dBmV
Storage temperature	T_{stg}	−40 to +100	°C
Operating mounting base temperature	T_{mb}	−20 to +90	°C

CHARACTERISTICS

Supply voltage V_B = +24 V; T_{amb} = 25 °C

Power gain at f = 50 MHz	G_p	34,0	±	1,0	dB
Slope cable equivalent f = 40 MHz to 450 MHz	SL	0,5	to	2,5	dB
Flatness of frequency response f = 40 MHz to 450 MHz	FL	max.	±	0,3	dB
Return losses at input and output $Z_S = Z_L = 75\ \Omega$; f = 40 MHz to 450 MHz	$S_{11\text{-}22}$	min.		18	dB
Output voltage at d_{im} = −60 dB (DIN 45004B, par. 6.3: 3-tone) $V_p = V_o$; f_p = 387,25 MHz $V_q = V_o - 6$ dB; f_q = 394,25 MHz $V_r = V_o - 6$ dB; f_r = 396,25 MHz Measured at $f_{(p+q-r)}$ = 385,25 MHz	V_o	min.		62	dBmV
Output voltage at d_{im} = −60 dB (DIN 45004B, par. 6.3: 3-tone) $V_p = V_o$; f_p = 287,25 MHz $V_q = V_o - 6$ dB; f_q = 294,25 MHz $V_r = V_o - 6$ dB; f_r = 296,25 MHz Measured at $f_{(p+q-r)}$ = 285,25 MHz	V_o	min.		63,5	dBmV
2nd-order distortion V_o = 50 dBmV; channel 2 V_o = 50 dBmV; channel 13 Measured at channel R	d_2	max.		−70	dB
V_o = 50 dBmV; channel G V_o = 50 dBmV; channel N Measured at channel H14	d_2	typ.		−67	dB
Composite triple beat 52 channels V_o = 46 dBmV; channel H14	CTB			−59	dB
Output capability on channel H14 Xmod = −57 dB; 52 channels flat	V_o			47	dBmV
Noise figure f = 40 MHz to 450 MHz	F	max.		6	dB
Total d.c. current consumption	I_{tot}	typ. max.		320 340	mA mA

CATV AMPLIFIER MODULES

Hybrid amplifier modules for CATV systems operating at frequencies up to 450 MHz.

BGY84: 17,0 dB input amplifier module
BGY85: 17,0 dB output amplifier module

Features:

- excellent linearity;
- extremely low noise;
- optimal reliability ensured by TiPtAu metallized crystals, silicon nitride passivation and rugged construction.

QUICK REFERENCE DATA

			BGY84	BGY85	
Frequency range	f		40 to 450	40 to 450	MHz
Source impedance and load impedance	$Z_S = Z_L$		75	75	Ω
Power gain at f = 50 MHz	G_p		17,0 ± 0,5	17,0 ± 0,5	dB
Slope cable equivalent f = 40 MHz to 450 MHz	SL		0,5 to 1,5	0,5 to 1,5	dB
Return losses at input and output f = 40 MHz	$S_{11\text{-}22}$	min.	20	20	dB
f = 450 MHz		min.	18	18	dB
Output voltage at d_{im} = −60 dB (DIN 45004B, par. 6.3: 3-tone)	V_o	min.	60	62,5	dBmV
2nd order distortion V_o = 46 dBmV	d_2	max.	−70	−70	dB
Composite triple beat 60 channels V_o = 46 dBmV	CTB	max.	−55	−58	dB
Cross modulation distortion V_o = 46 dBmV; 60 channels	X_{mod}	max.	−57	−60	dB
Noise figure f = 40 MHz to 450 MHz	F	max.	6,5	7,0	dB
D.C. supply voltage	$+V_B$	=	24	24	V*
Total d.c. current consumption at V_B = + 24 V	I_{tot}	typ.	180	220	mA

MECHANICAL DATA

SOT-115 (see Fig. 1).

---

* The modules normally operate at V_B = 24 V, but are able to withstand supply transients up to 30 V.

MECHANICAL DATA

Dimensions in mm

Fig. 1 SOT-115.

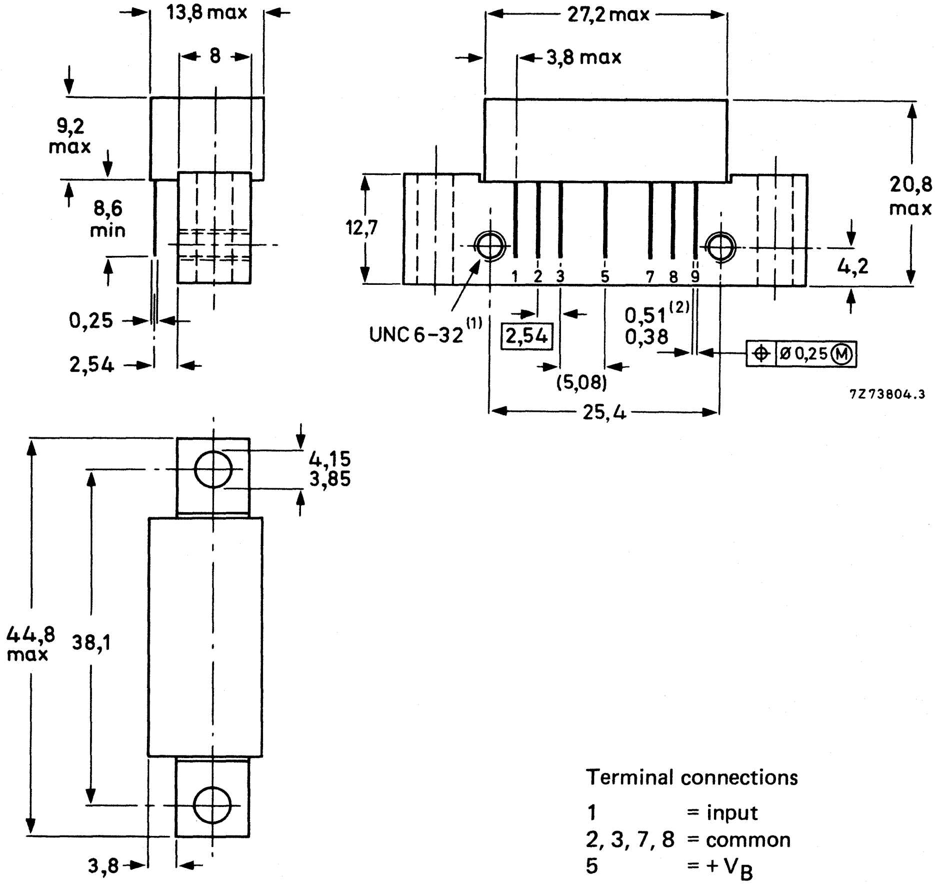

Terminal connections

1 = input
2, 3, 7, 8 = common
5 = + V_B
9 = output

(1) Screw 6-32UNC-2A available on request (see "Accessories").
(2) Gold plated leads.

See "Mounting and Soldering Recommendations".

RATINGS

Limiting values in accordance with the Absolute Maximum System (IEC 134)

R.F. input voltage	V_i	max.	65 dBmV
Storage temperature	T_{stg}	−40 to + 100	°C
Operating mounting base temperature	T_{mb}	−20 to + 100	°C

CHARACTERISTICS

Supply voltage V_B = + 24 V; T_{mb} = 30 °C

			BGY84	BGY85	
Power gain					
f = 50 MHz	G_p		17,0 ± 0,5	17,0 ± 0,5	dB ←
f = 450 MHz			17,3 to 18,8	17,3 to 18,8	dB
Slope cable equivalent f = 40 MHz to 450 MHz	SL		+ 0,5 to + 1,5	+ 0,5 to 1,5	dB
Flatness of frequency response f = 40 MHz to 450 MHz	FL	max.	± 0,2	± 0,2	dB
Return losses at input and output $Z_S = Z_L = 75\ \Omega$					
f = 40 to 80 MHz		min.	20	20	dB
f = 80 to 160 MHz	$S_{11\text{-}22}$	min.	19	19	dB
f = 160 to 450 MHz		min.	18	18	dB
Output voltage at d_{im} = −60 dB (DIN 45004B, 6.3: 3-tone) $V_p = V_o$; f_p = 440,25 MHz $V_q = V_o$ −6 dB; f_q = 447,25 MHz $V_r = V_o$ −6 dB; f_r = 449,25 MHz Measured at $f_{(p+q-r)}$ = 438,25 MHz	V_o	min.	60	62,5	dBmV
2nd order distortion V_o = 46 dBmV; channel 2 V_o = 46 dBmV; channel H5 Measured at channel H14	d_2	max.	−70	−70	dB
Composite triple beat 60 channels V_o = 46 dBmV; channel H22	CTB	max.	−55	−58	dB
Cross modulation distortion V_o = 46 mVdB; 60 channels Measured at channel 2	X_{mod}	max.	−57	−60	dB
Noise figure f = 40 MHz to 450 MHz	F	max.	6,5	7,0	dB
Total d.c. current consumption	I_{tot}	typ.	180	220	mA
		max.	200	240	mA

CATV AMPLIFIER MODULES

Hybrid amplifier modules for CATV systems operating at frequencies up to 450 MHz.

BGY84A: 18,5 dB input amplifier module
BGY85A: 18,5 dB output amplifier module

Features:

- excellent linearity;
- extremely low noise;
- optimal reliability ensured by TiPtAu metallized crystals, silicon nitride passivation and rugged construction.

QUICK REFERENCE DATA

			BGY84A	BGY85A	
Frequency range	f		40 to 450	40 to 450	MHz
Source impedance and load impedance	$Z_S = Z_L$		75	75	Ω
Power gain at f = 50 MHz	G_p		18,4 ± 0,4	18,4 ± 0,4	dB
Slope cable equivalent f = 40 MHz to 450 MHz	SL		0,3 to 1,5	0,3 to 1,5	dB
Flatness of frequency response f = 40 MHz to 450 MHz	FL	max.	± 0,2	± 0,2	dB
Return losses at input and output f = 40 MHz	$S_{11\text{-}22}$	min.	20	20	dB
f = 450 MHz		min.	18	18	dB
Output voltage at $d_{im} = -60$ dB (DIN 45004B, par. 6.3: 3-tone)	V_o	min.	60	62,5	dBmV
2nd order distortion $V_o = 46$ dBmV	d_2	max.	−72	−72	dB
Composite triple beat 60 channels $V_o = 46$ dBmV	CTB	max.	−55	−59	dB
Cross modulation distortion $V_o = 46$ dBmV; 60 channels	X_{mod}	max.	−58	−61	dB
Noise figure f = 40 MHz to 450 MHz	F	max.	6,5	7,0	dB
D.C. supply voltage	$+V_B$	=	24	24	V*
Total d.c. current consumption at $V_B = +24$ V	I_{tot}	typ.	180	220	mA

MECHANICAL DATA

SOT-115 (see Fig. 1).

---

* The modules normally operate at $V_B = 24$ V, but are able to withstand supply transients up to 30 V.

MECHANICAL DATA Dimensions in mm

Fig. 1 SOT-115.

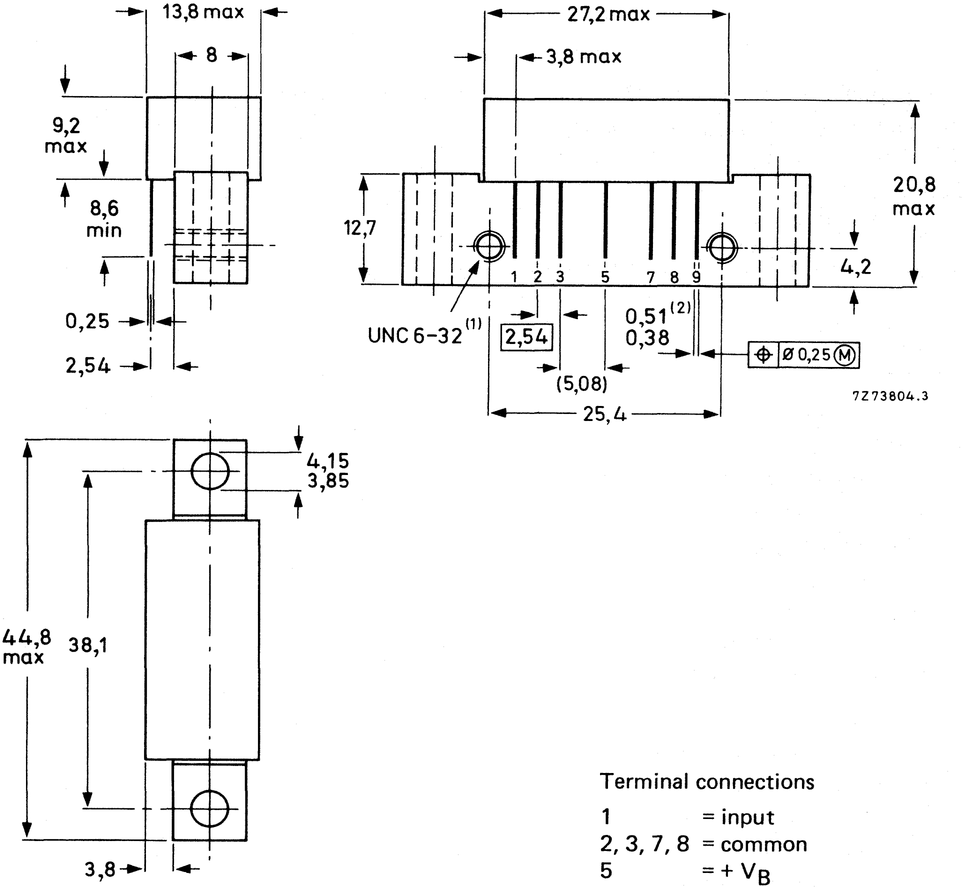

Terminal connections

1 = input
2, 3, 7, 8 = common
5 = + V_B
9 = output

(1) Screw 6-32UNC-2A available on request (see "Accessories").
(2) Leads gold-plated.

See "Mounting and Soldering Recommendations".

RATINGS

Limiting values in accordance with the Absolute Maximum System (IEC 134)

R.F. input voltage	V_i	max.	65 dBmV
Storage temperature	T_{stg}	−40 to + 100	°C
Operating mounting base temperature	T_{mb}	−20 to + 100	°C

CHARACTERISTICS

Supply voltage V_B = + 24 V; T_{mb} = 30 °C

			BGY84A	BGY85A
Power gain at f = 50 MHz	G_p		18,4 ± 0,4	18,4 ± 0,4 dB
Power gain at f = 450 MHz	G_p		18,7 to 20,2	18,7 to 20,2 dB
Slope cable equivalent f = 40 MHz to 450 MHz	SL		+ 0,3 to 1,5	+ 0,3 to 1,5 dB
Flatness of frequency response f = 40 MHz to 450 MHz	FL	max.	± 0,2	± 0,2 dB
Return losses at input and output $Z_S = Z_L = 75\ \Omega$ f = 40 to 80 MHz	$S_{11\text{-}22}$	min.	20	20 dB
f = 80 to 160 MHz		min.	19	19 dB
f = 160 to 450 MHz		min.	18	18 dB
Output voltage at d_{im} = −60 dB (DIN 45004B, 6.3: 3-tone) $V_p = V_o$; f_p = 440,25 MHz $V_q = V_o$ −6 dB; f_q = 447,25 MHz $V_r = V_o$ −6 dB; f_r = 449,25 MHz Measured at $f_{(p+q-r)}$ = 438,25 MHz	V_o	min.	60	62,5 dBmV
2nd order distortion V_o = 46 dBmV; channel 2 V_o = 46 dBmV; channel H5 Measured at channel H14	d_2	max.	−72	−72 dB
Composite triple beat 60 channels V_o = 46 dBmV; measured channel H22	CTB	max.	−55	−59 dB
Cross modulation distortion V_o = 46 dBmV; 60 channels Measured at channel 2	X_{mod}	max.	−58	−61 dB
Noise figure f = 40 MHz to 450 MHz	F	max.	6,5	7,0 dB
Total d.c. current consumption	I_{tot}	typ.	180	220 mA
		max.	200	240 mA

CATV AMPLIFIER MODULES

Hybrid amplifier modules for use in CATV systems and operating at frequencies up to 450 MHz.

BGY86: 22 dB preamplifier
BGY87: 22 dB final amplifier

Features

- excellent linearity
- extremely low noise
- optimal reliability ensured by TiPtAu metallized crystals, silicon nitride glass barrier and rugged construction

QUICK REFERENCE DATA

			BGY86	BGY87	
Frequency range	f		40 to 450	40 to 450	MHz
Source impedance and load impedance	$Z_S = Z_L$	=	75	75	Ω
Power gain at f = 50 MHz	G_p		22,0 ± 0,5	22,0 ± 0,5	dB
Slope cable equivalent f = 40 MHz to 450 MHz	SL		0,2 to 1,5	0,2 to 1,5	dB
Flatness of frequency response f = 40 MHz to 450 MHz	FL	max.	± 0,2	± 0,2	dB
Return losses at input and output f = 40 MHz to 450 MHz	$S_{11\text{-}22}$	min.	18	18	dB
Output voltage at d_{im} = −60 dB (DIN 45004B, par. 6.3: 3-tone)	V_o	min.	61,5	64	dBmV
2nd-order distortion V_o = 46 dBmV	d_2	max.	−68	−72	dB
Composite triple beat V_o = 46 dBmV	CTB	max.	−56	−60	dB
Cross modulation V_o = 46 dBmV	X_{mod}	max.	−53	−57	dB
Noise figure f = 450 MHz	F	max.	6,0	6,5	dB
D.C. supply voltage*	$+V_B$	=	24	24	V*
Total d.c. current consumption at V_B = + 24 V	I_{tot}	max.	200	240	mA
Operating case temperature	T_c		−20 to + 100		°C

MECHANICAL DATA

SOT-115 (see Fig. 1).

---

* The modules normally operate at V_B = 24 V, but are able to withstand supply transients up to 30 V.

MECHANICAL DATA Dimensions in mm

Fig. 1 SOT-115.

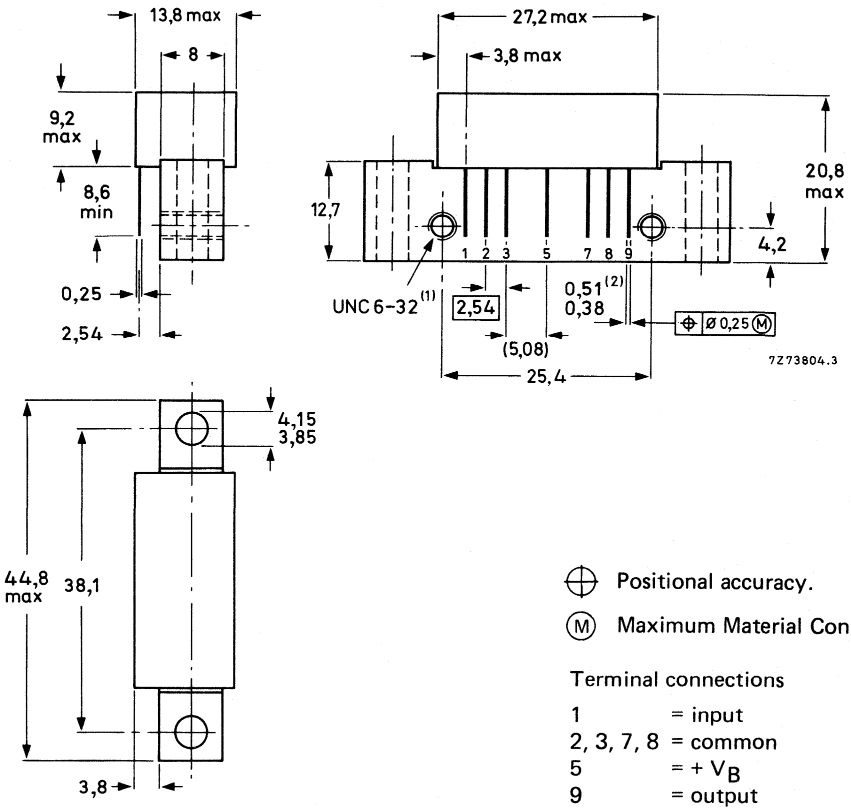

⊕ Positional accuracy.

Ⓜ Maximum Material Condition.

Terminal connections

1 = input
2, 3, 7, 8 = common
5 = + V_B
9 = output

(1) Screw 6-32UNC-2A available upon request (see "Accessories").
(2) Gold-plated leads.

See "Mounting and Soldering Recommendations".

RATINGS

Limiting values in accordance with the Absolute Maximum System (IEC 134)

R.F. input voltage	V_i	max.	60	dBmV
Storage temperature	T_{stg}		−40 to + 100	°C
Operating case temperature	T_c		−20 to + 100	°C

CHARACTERISTICS

Supply voltage $V_B = +24$ V; $Z_S = Z_L = 75\ \Omega$; $T_c = 30$ °C

			BGY86	BGY87	
Power gain at f = 50 MHz	G_p		22,0 ± 0,5	22,0 ± 0,5	dB
Power gain at f = 450 MHz	G_p		22,0 to 23,5	22,0 to 23,5	dB
Slope cable equivalent f = 40 MHz to 450 MHz	SL		0,2 to 1,5	0,2 to 1,5	dB
Flatness of frequency response f = 40 MHz to 450 MHz	FL	max.	± 0,2	± 0,2	dB
Return losses at input and output $Z_S = Z_L = 75\ \Omega$					
f = 40 MHz to 80 MHz	$S_{11\text{-}22}$	min.	20	20	dB
f = 80 MHz to 160 MHz	$S_{11\text{-}22}$	min.	19	19	dB
f = 160 MHz to 450 MHz	$S_{11\text{-}22}$	min.	18	18	dB
Output voltage at $d_{im} = -60$ dB (DIN 45004B, 6.3: 3-tone) $V_p = V_o$; $f_p = 440{,}25$ MHz $V_q = V_o - 6$ dB; $f_q = 447{,}25$ MHz $V_r = V_o - 6$ dB; $f_r = 449{,}25$ MHz Measured at $f_{(p+q-r)} = 438{,}25$ MHz	V_o	min.	61,5	64,0	dBmV
2nd-order distortion $V_o = 46$ dBmV; $f_p = 55{,}25$ MHz (ch. 2) $V_o = 46$ dBmV; $f_q = 391{,}25$ MHz (ch. H13) Tested at $f_{(p+q)} = 446{,}5$ MHz (ch. H22)	d_2	max.	−68	−72	dB
Composite triple beat at 60 channels $V_o = 46$ dBmV; tested at channel H22	CTB	max.	−56	−60	dB
Cross modulation at 60 channels $V_o = 46$ dBmV; tested in channel 2	X_{mod}	max.	−53	−57	dB
Noise figure f = 450 MHz	F	max.	6,0	6,5	dB
Total d.c. current consumption	I_{tot}	typ.	180	220	mA
		max.	200	240	mA

CATV AMPLIFIER MODULE

Hybrid amplifier module for use as 34,5 dB line extender in CATV systems and operating at frequencies up to 450 MHz.

Features

- excellent linearity
- extremely low noise
- optimum reliability ensured by TiPtAu metallized crystals, silicon nitride glass barrier and rugged construction.

QUICK REFERENCE DATA

Frequency range	f		40 to 450	MHz
Source impedance and load impedance	$Z_S = Z_L$		75	Ω
Power gain f = 50 MHz f = 450 MHz	G_P		34,5 ± 1,0 35 to 37	dB dB
Slope cable equivalent f = 40 MHz to 450 MHz	SL		0,5 to 2,5	dB
Flatness of frequency response f = 40 MHz to 450 MHz	FL	max.	±0,3	dB
Return losses at input and output f = 40 MHz to 450 MHz	$S_{11\text{-}22}$	min.	18	dB
Intermodulation distortion at V_o = 62 dBmV (DIN 45004, par. 6.3: 3-tone)	d_{im}	max.	−60	dB
2nd-order distortion V_o = 46 dBmV	d_2	max.	−70	dB
Composite triple beat; 60 channels V_o = 46 dBmV	CTB	max.	−58	dB
Cross modulation distortion V_o = 46 dBmV; 60 channels	X_{mod}	max.	−59	dB
Noise figure f = 450 MHz	F	max.	6	dB
D.C. supply voltage	$+V_B$	=	24	V*
Total d.c. current consumption V_B = +24 V	I_{tot}	typ.	320	mA
Operating mounting base temperature	T_{mb}		−20 to 100	°C

MECHANICAL DATA

SOT-115 (see Fig. 1).

* The module normally operates at V_B = 24 V, but is able to withstand incidental supply transients up to 30 V.

MECHANICAL DATA

Dimensions in mm

Fig. 1 SOT-115.

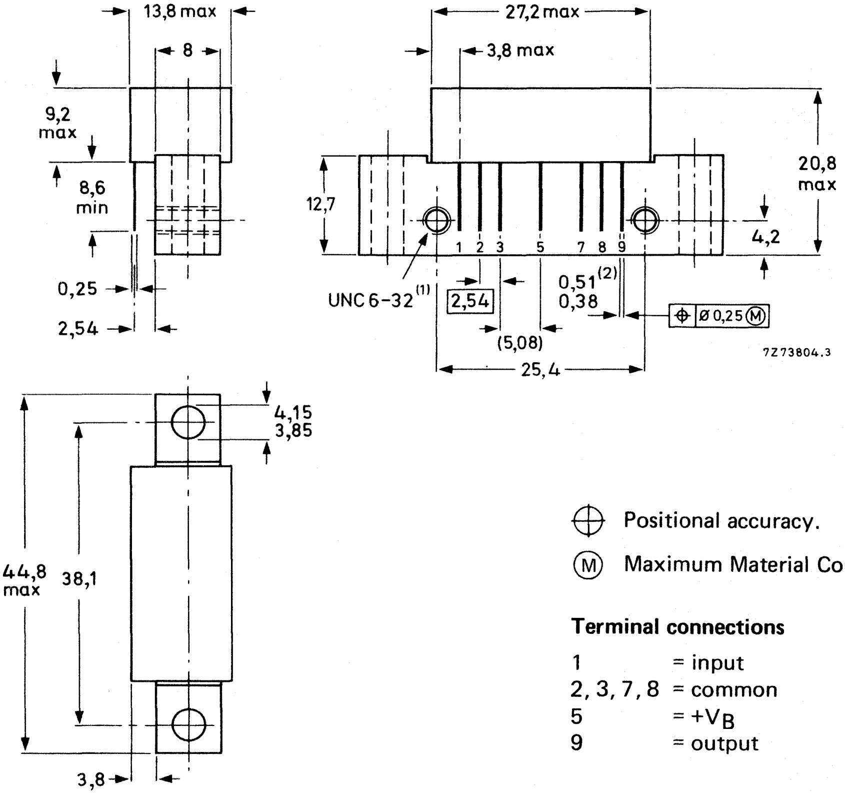

⌖ Positional accuracy.

Ⓜ Maximum Material Condition.

Terminal connections

1 = input
2, 3, 7, 8 = common
5 = $+V_B$
9 = output

(1) Screw 6-32UNC-2A available upon request.
(2) Goldplated leads.

See "Mounting and Soldering Recommendations"

RATINGS

Limiting values in accordance with the Absolute Maximum System (IEC 134)

R.F. input voltage	V_i	max.	55	dBmV
Storage temperature	T_{stg}		−40 to +100	°C
Operating mounting base temperature	T_{mb}		−20 to +100	°C

CHARACTERISTICS

Supply voltage V_B = +24 V; $Z_S = Z_L$ = 75 Ω; T_{mb} = 35 °C

Power gain				
f = 50 MHz	G_P		34,5 ± 1,0	dB
f = 450 MHz			35,0 to 37,0	dB
Slope cable equivalent f = 40 MHz to 450 MHz	SL		0,5 to 2,5	dB
Flatness of frequency response f = 40 MHz to 450 MHz	FL	max.	±0,3	dB
Return losses at input and output $Z_S = Z_L$ = 75 Ω;				
f = 40 MHz to 80 MHz		min.	20	dB
f = 80 MHz to 160 MHz	$S_{11\text{-}22}$	min.	19	dB
f = 160 MHz to 450 MHz		min.	18	dB
Intermodulation distortion (DIN 45004B, par. 6.3: 3-tone) $V_p = V_o$ = 62 dBmV f_p = 440,25 MHz $V_q = V_o$ −6 dB; f_q = 447,25 MHz $V_r = V_o$ −6 dB; f_r = 449,25 MHz measured at $f_{(p+q-r)}$ = 438,25 MHz	d_{im}	max.	−60	dB
2nd-order distortion V_p = 46 dBmV; f_p = 55,25 MHz V_q = 46 dBmV; f_q = 343,25 MHz tested at $f_{(p+q)}$ = 398,50 in channel H14	d_2	max.	−70	dB
Composite triple beat 60 channels flat V_o = 46 dBmV; tested in channel H22	CTB	max.	−58	dB
Cross modulation distortion 60 channels flat V_o = 46 dBmV; tested in channel 2	X_{mod}	max.	−59	dB
Noise figure f = 450 MHz	F	max.	6	dB
Total d.c. current consumption	I_{tot}	typ.	320	mA
		max.	340	mA

CATV AMPLIFIER MODULES

Hybrid amplifier modules for use in CATV systems and operating at frequencies up to 550 MHz.

BGY584A: 18,2 dB preamplifier
BGY585A: 18,2 dB final amplifier

Features

- excellent linearity
- extremely low noise
- optimal reliability ensured by TiPtAu metallized crystals, silicon nitride glass barrier and rugged construction

QUICK REFERENCE DATA

			BGY584A	BGY585A	
Frequency range	f		40 to 550	40 to 550	MHz
Source impedance and load impedance	$Z_S = Z_L$	=	75	75	Ω
Power gain at f = 50 MHz	G_p		18,2 ± 0,5	18,2 ± 0,5	dB
Slope cable equivalent f = 40 MHz to 550 MHz	SL		0,5 to 2,0	0,5 to 2,0	dB
Flatness of frequency reponse f = 40 MHz to 550 MHz	FL	max.	± 0,2	± 0,2	dB
Return losses at input and output f = 40 MHz to 550 MHz	$S_{11\text{-}22}$	min.	18	18	dB
Output voltage at d_{im} = –60 dB (DIN 45004B, par. 6.3: 3-tone)	V_o	min.	59,0	61,5	dBmV
2-nd order distortion V_o = 44 dBmV	d_2	max.	–70	–72	dB
Composite triple beat V_o = 44 dBmV	CTB	max.	–56	–59	dB
Cross modulation V_o = 44 dBmV	X_{mod}	max.	–59	–62	dB
Noise figure f = 550 MHz	F	max.	7,0	8,0	dB
D.C. supply voltage*	$+V_B$	=	24	24	V*
Total d.c. current consumption at V_B = + 24 V	I_{tot}	max.	200	240	mA
Operating case temperature	T_c		–20 to + 100		°C

MECHANICAL DATA

SOT-115 (see Fig. 1).

---

* The modules normally operate at V_B = 24 V, but are able to withstand supply transients up to 30 V.

MECHANICAL DATA

Dimensions in mm

Fig. 1 SOT-115.

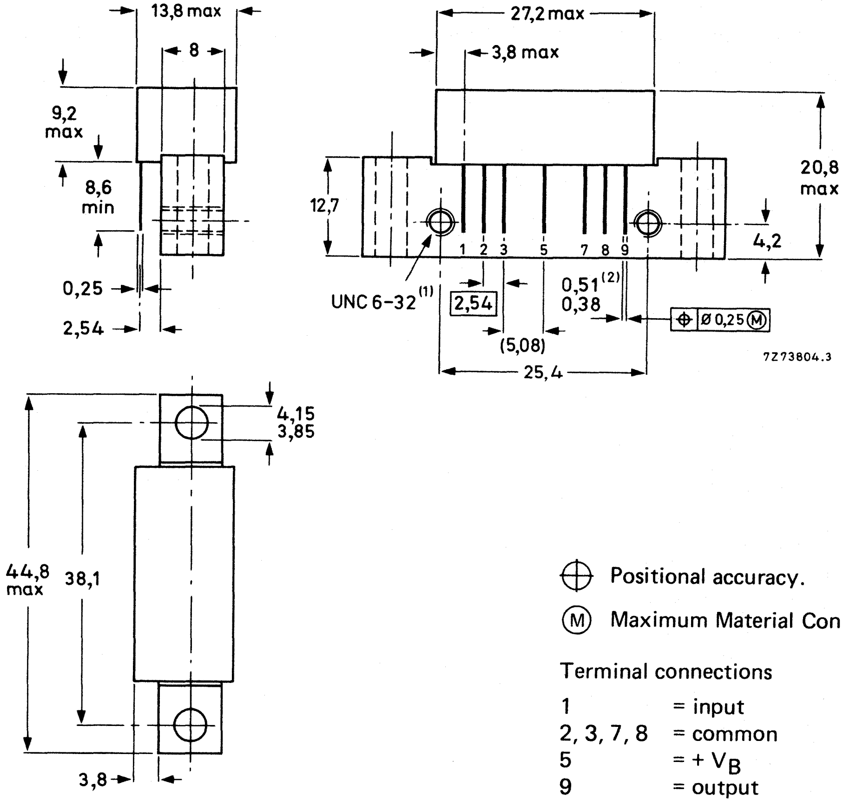

⊕ Positional accuracy.

Ⓜ Maximum Material Condition.

Terminal connections

1 = input
2, 3, 7, 8 = common
5 = + V_B
9 = output

(1) Screw 6-32UNC-2A available upon request (see "Accessories").
(2) Gold-plated leads.

See "Mounting and Soldering recommendations".

DEVELOPMENT DATA

RATINGS

Limiting values in accordance with the Absolute Maximum System (IEC 134)

R.F. input voltage	V_i	max.	60	dBmV
Storage temperature	T_{stg}		−40 to + 100	°C
Operating case temperature	T_c		−20 to + 100	°C

CHARACTERISTICS

Supply voltage $V_B = +24$ V; $Z_S = Z_L = 75\ \Omega$; $T_c = 30$ °C

			BGY584A	BGY585A	
Power gain at f = 50 MHz	G_p		18,2 ± 0,5	18,2 ± 0,5	dB
Power gain at f = 550 MHz	G_p		18,8 to 20,0	18,8 to 20,0	dB
Slope cable equivalent f = 40 MHz to 550 MHz	SL		0,5 to 2,0	0,5 to 2,0	dB
Flatness of frequency response f = 40 MHz to 550 MHz	FL	max.	± 0,2	± 0,2	dB
Return losses at input and output $Z_S = Z_L = 75\ \Omega$					
f = 40 MHz to 80 MHz		min.	20	20	dB
f = 80 MHz to 160 MHz	$S_{11\text{-}22}$	min.	19	19	dB
f = 160 MHz to 550 MHz		min.	18	18	dB
Output voltage at $d_{im} = -60$ dB (DIN 45004B, 6.3: 3-tone) $V_p = V_o$; $f_p = 540{,}25$ MHz $V_q = V_o -6$ dB; $f_q = 547{,}25$ MHz $V_r = V_o -6$ dB; $f_r = 549{,}25$ MHz					
Measured at $f_{(p+q-r)} = 538{,}25$ MHz	V_o	min.	59,0	61,5	dBmV
2nd-order distortion $V_o = 44$ dBmV; $f_p = 55{,}25$ MHz (ch. 2) $V_o = 44$ dBmV; $f_q = 493{,}25$ MHz (ch. 18)					
Tested at $f_{(p+q)} = 548{,}5$ MHz (ch. 27)	d_2	max.	−70	−72	dB
Composite triple beat at 77 channels $V_o = 44$ dBmV; tested at channel 27	CTB	max.	−56	−59	dB
Cross modulation at 77 channels $V_o = 44$ dBmV; tested in channel 2	X_{mod}	max.	−59	−62	dB
Noise figure f = 550 MHz	F	max.	7,0	8,0	dB
Total d.c. current consumption	I_{tot}	typ.	180	220	mA
		max.	200	240	mA

BGY586
BGY587

CATV AMPLIFIER MODULES

Hybrid amplifier modules for use in CATV systems and operating at frequencies up to 550 MHz.

BGY586: 22 dB preamplifier
BGY587: 22 dB final amplifier

Features

- excellent linearity
- extremely low noise
- optimal reliability ensured by TiPtAu metallized crystals, silicon nitride glass barrier and rugged construction

QUICK REFERENCE DATA

			BGY586	BGY587	
Frequency range	f		40 to 550	40 to 550	MHz
Source impedance and load impedance	$Z_S = Z_L$	=	75	75	Ω
Power gain at f = 50 MHz	G_p		22,0 ± 0,5	22,0 ± 0,5	dB
Slope cable equivalent f = 40 MHz to 550 MHz	SL		0,5 to 2,0	0,5 to 2,0	dB
Flatness of frequency response f = 40 MHz to 550 MHz	FL	max.	± 0,2	± 0,2	dB
Return losses at input and output f = 40 MHz to 550 MHz	$S_{11\text{-}22}$	min.	18	18	dB
Output voltage at $d_{im} = -60$ dB (DIN 45004B, par. 6.3: 3-tone)	V_o	min.	58,5	61,0	dBmV
2nd-order distortion V_o = 44 dBmV	d_2	max.	−62	−66	dB
Composite triple beat V_o = 44 dBmV	CTB	max.	−53	−57	dB
Cross modulation V_o = 44 dBmV	X_{mod}	max.	−55	−59	dB
Noise figure f = 550 MHz	F	max.	6,5	7,0	dB
D.C. supply voltage*	$+V_B$	=	24	24	V*
Total d.c. current consumption at V_B = + 24 V	I_{tot}	max.	200	240	mA
Operating case temperature	T_c		−20 to + 100		°C

MECHANICAL DATA

SOT-115 (see Fig. 1).

---

* The modules normally operate at V_B = 24 V, but are able to withstand supply transients up to 30 V.

MECHANICAL DATA

Dimensions in mm

Fig. 1 SOT-115.

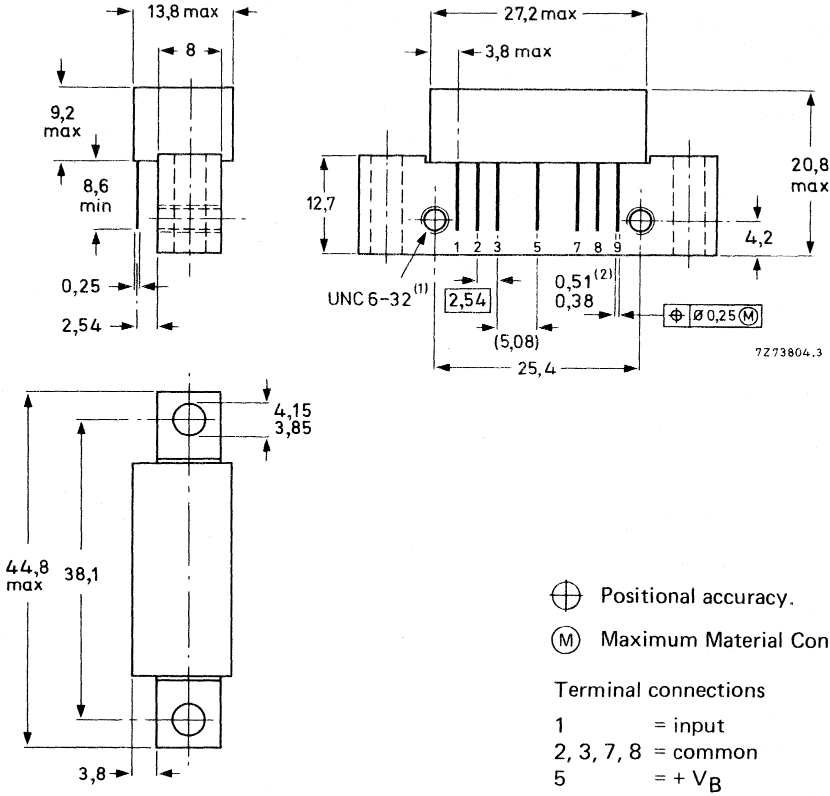

⌖ Positional accuracy.

Ⓜ Maximum Material Condition.

Terminal connections

1 = input
2, 3, 7, 8 = common
5 = + V_B
9 = output

(1) Screw 6-32UNC-2A available upon request (see "Accessories").
(2) Gold-plated leads.

See "Mounting and Soldering Recommendations".

DEVELOPMENT DATA

RATINGS

Limiting values in accordance with the Absolute Maximum System (IEC 134)

R.F. input voltage	V_i	max.	60	dBmV
Storage temperature	T_{stg}		−40 to + 100	°C
Operating case temperature	T_c		−20 to + 100	°C

CHARACTERISTICS

Supply voltage $V_B = + 24$ V; $Z_S = Z_L = 75\ \Omega$; $T_c = 30$ °C

			BGY586	BGY587	
Power gain at f = 50 MHz	G_p		22,0 ± 0,5	22,0 ± 0,5	dB
Power gain at f = 550 MHz	G_p	min.	22,0	22,0	dB
Slope cable equivalent f = 40 MHz to 550 MHz	SL		0,5 to 2,0	0,5 to 2,0	dB
Flatness of frequency response f = 40 MHz to 550 MHz	FL	max.	± 0,2	± 0,2	dB
Return losses at input and output $Z_S = Z_L = 75\ \Omega$ f = 40 MHz to 80 MHz	$S_{11\text{-}22}$	min.	20	20	dB
f = 80 MHz to 160 MHz		min.	19	19	dB
f = 160 MHz to 550 MHz		min.	18	18	dB
Output voltage at $d_{im} = -60$ dB (DIN 45004B, 6.3: 3-tone) $V_p = V_o$; $f_p = 540{,}25$ MHz $V_q = V_o -6$ dB; $f_q = 547{,}25$ MHz $V_r = V_o -6$ dB; $f_r = 549{,}25$ MHz Measured at $f_{(p+q-r)} = 538{,}25$ MHz	V_o	min.	58,5	61,0	dBmV
2nd-order distortion $V_o = 44$ dBmV; $f_p = 55{,}25$ MHz (ch. 2) $V_o = 44$ dBmV; $f_q = 493{,}25$ MHz (ch. 18) Tested at $f_{(p+q)} = 548{,}5$ MHz (ch. 27)	d_2	max.	−62	−66	dB
Composite triple beat at 77 channels $V_o = 44$ dBmV; tested at channel 27	CTB	max.	−53	−57	dB
Cross modulation at 77 channels $V_o = 44$ dBmV; tested in channel 2	X_{mod}	max.	−55	−59	dB
Noise figure f = 550 MHz	F	max.	6,5	7,0	dB
Total d.c. current consumption	I_{tot}	typ.	180	220	mA
		max.	200	240	mA

DEVICE DATA

Hybrid ICs for wideband amplifiers

HYBRID ICs FOR WIDE-BAND AMPLIFIERS

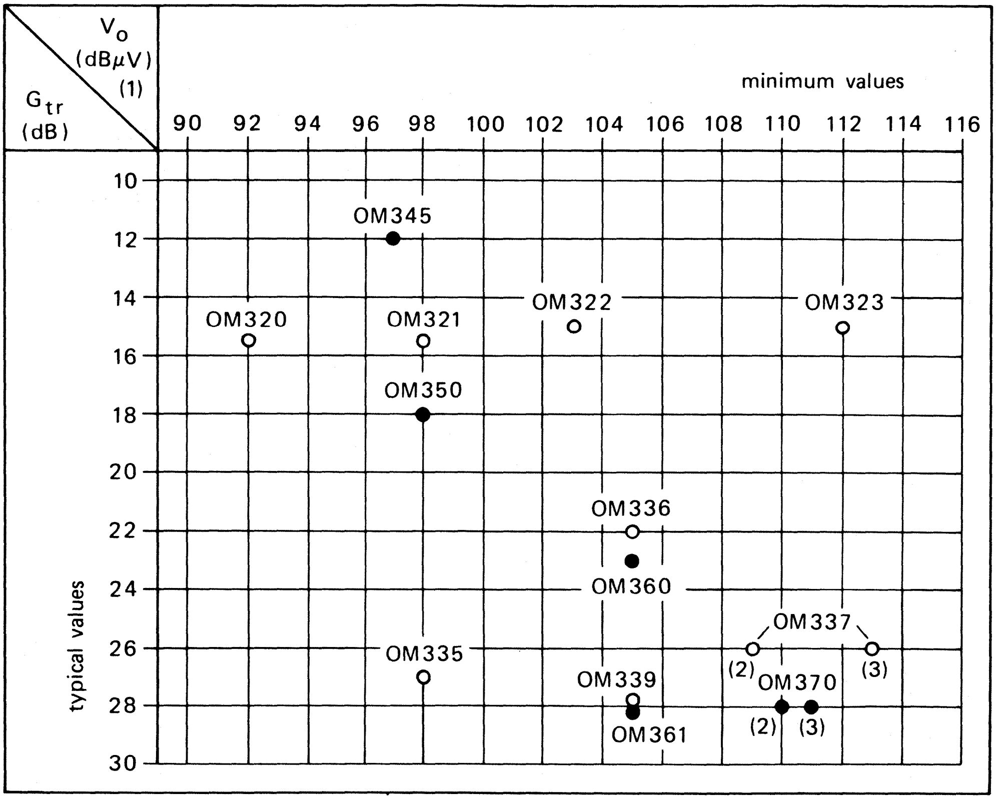

● 12 V types

○ 24 V types

(1) At –60 dB intermodulation distortion (DIN 45004, par. 6.3: 3-tone).

(2) UHF.

(3) VHF.

Fig. 1 Type/performance in matrix survey.

The matrix survey (Fig. 1) and the tables next page show both the 12 V and 24 V ranges.

Note that the modules are available in the combination of high gain- high output voltage.

12 V supply voltage

	type	stage	gain (dB)	$V_{o(rms)}$ (dBμV) −60 dB IMD (note 1) min. values	noise figure (dB)	max. VSWR typ. values (note 2)		supply current (mA)	page
						input	output		
low	OM345	1	12	97	5,5	2,0	1,4	11,5	733
medium	OM350	2	18	98	6,0	1,5	1,9	18	739
medium	OM360	3	23	105	7,0	1,3	1,5	55	745
output	OM361	3	28	105	6,0	1,5	1,7	50	751
high output	OM370	3	28	111	7,0	2,3	1,9	105	757

24 V supply voltage

	type	stages	gain (dB)	$V_{o(rms)}$ (dBμV) −60 dB IMD (note 1) min. values	noise figure (dB)	max. VSWR typ. values (note 2)		supply current (mA)	page
						input	output		
low output	OM320	2	15,5	92	5,5	2,2	2,5	33	687
	OM321	2	15,5	98	6,0	2,5	2,0	33	693
	OM335	3	27	98	5,5	1,9	3,2	35	711
medium output	OM322	2	15	103	7,0	1,7	1,7	60	699
	OM336	3	22	105	7,0	1,4	1,6	65	717
	OM339	3	28	105	6,0	1,5	1,5	66	729
high	OM323*	2	15	112	9,0	1,9	2,3	100	705
output	OM337*	3	26	113	9,8	2,3	1,8	115	721

* Also available in A-version for external coil and output capacitor.

Notes

1. Measured at −60 dB intermodulation distortion to DIN 45004, par. 6.3: 3-tone, f = 470 MHz.
2. The typical maximum VSWR occurring in the frequency range 40-860 MHz, for a sample connected to a 75 Ω line.

HYBRID VHF/UHF WIDE-BAND AMPLIFIER

Two-stage wide-band amplifier in the hybrid technique, designed for use in mast-head booster amplifiers, as pre-amplifier in MATV systems, and as general-purpose amplifier for v.h.f. and u.h.f. applications

QUICK REFERENCE DATA

Frequency range	f		40 to 860	MHz
Source and load (characteristic) impedance	$R_S = R_\ell = Z_o$	=	75	Ω
Transducer gain	$G_{tr} = \|s_f\|^2$	typ.	15, 5	dB
Flatness of frequency response	$\pm\Delta\|s_f\|^2$	typ.	1	dB
Output voltage at −60 dB intermodulation distortion (DIN45004, 3-tone)	$V_{o(rms)}$	>	92	dBμV
Noise figure	F	typ.	5, 5	dB
D.C. supply voltage	V_B	=	24	V ± 10%
Operating ambient temperature	T_{amb}		−20 to +70	°C

ENCAPSULATION 7-pin, in-line, resin-coated body, see MECHANICAL DATA

CIRCUIT DIAGRAM

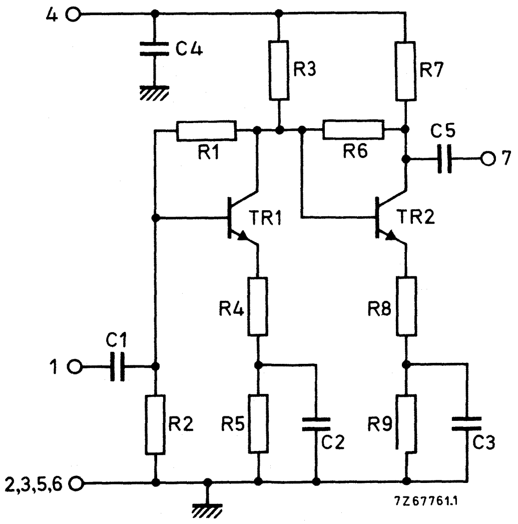

RATINGS Limiting values in accordance with the Absolute Maximum System (IEC 134)

Operating ambient temperature	T_{amb}		−20 to +70	°C
Storage temperature	T_{stg}		−40 to +125	°C
D.C. supply voltage	V_B	max.	28	V
Peak voltages on pins 1 and 7	V_{1M}, V_{7M}	max.	28	V
	$-V_{1M}$, V_{7M}	max.	10	V
Peak incident powers on pins 1 and 7	P_{I1M}, P_{I7M}	max.	100	mW

CHARACTERISTICS

Measuring conditions

V.H.F.-U.H.F. test socket	catalogue no.		3504 110 01840 *	
Ambient temperature	T_{amb}	=	25	°C
D.C. supply voltage	V_B	=	24	V
Source impedance and load impedance	R_s, R_ℓ	=	75	Ω
Characteristic impedance of h.f. connections	Z_o	=	75	Ω
Frequency range	f		40 to 860	MHz

Performance

Supply current	I_B	typ.	23	mA
Transducer gain	$G_{tr} = \lvert s_f \rvert^2$		13 to 18	dB
		typ.	15,5	dB
Flatness of frequency response	$\pm\Delta \lvert s_f \rvert^2$	typ.	1	dB
Individual maximum v.s.w.r.				
input	$VSWR_{(i)}$	typ.	2,2	**
output	$VSWR_{(o)}$	typ.	2,5	**
Back attenuation				
f = 100 MHz	$\lvert s_r \rvert^2$	typ.	30	dB
f = 860 MHz	$\lvert s_r \rvert^2$	typ.	24	dB
Output voltage at −60 dB intermodulation distortion (DIN45004, par. 6.3: 3-tone)	$V_{o(rms)}$	>	92	dBμV
		typ.	94	dBμV
Noise figure	F	typ.	5,5	dB

s-parameters	$s_f = s_{21}$	$s_i = s_{11}$
	$s_r = s_{12}$	$s_o = s_{22}$

---

* This socket can be made available for customer reference purposes.

** Highest value, for a sample, occurring in the frequency range.

OPERATING CONDITIONS

Ambient temperature range	T_{amb}		−20 to +70	^{o}C
D.C. supply voltage	V_B	=	24	V ±10%
Frequency range	f		40 to 860	MHz
Source impedance and load impedance	R_s, R_ℓ	=	75	Ω

MECHANICAL DATA

Dimensions in mm

Encapsulation

The device is resin coated.

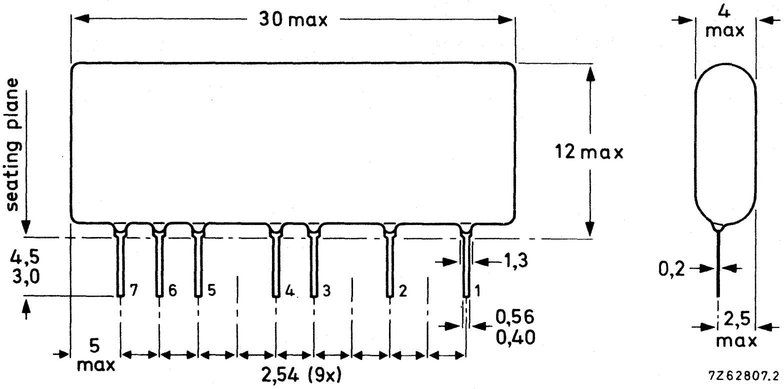

Terminal connections

1 = Input
2, 3, 5, 6 = Common
4 = Supply (+)
7 = Output

Soldering recommendations

Hand soldering

Maximum contact time for a soldering-iron temperature of 260 ^{o}C; up to seating plane:	5	s

Dip or wave soldering

260 °C is the maximum permissible temperature of the solder; it must not be in contact with the joint for more than 5 seconds. The total contact time of successive solder waves must not exceed 5 seconds.
The device may be mounted against the printed-circuit board, but the temperature of the device must not exceed 125 °C. If the printed-circuit board has been pre-heated, forced cooling may be necessary immediately after soldering to keep the temperature below the allowable limit.

Mounting recommendations

The module should preferably be mounted on double-sided printed-circuit board, see the example shown below.
Input and output should be connected to 75 Ω tracks.
The connections to the "common" pins should be as close to the seating plane as possible.

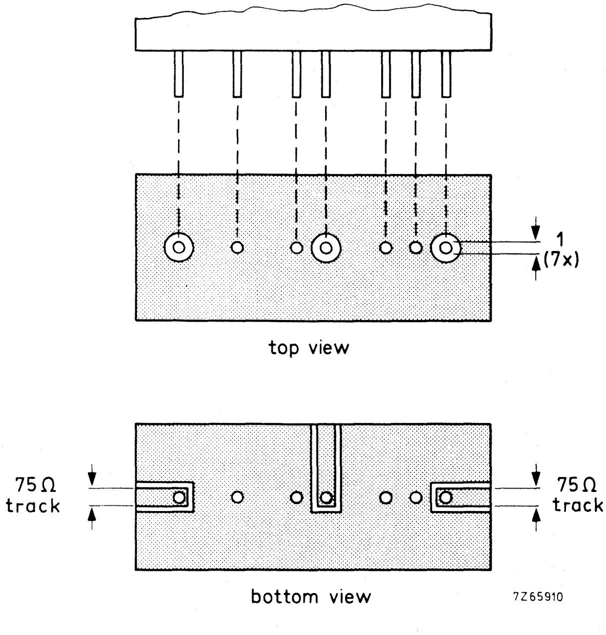

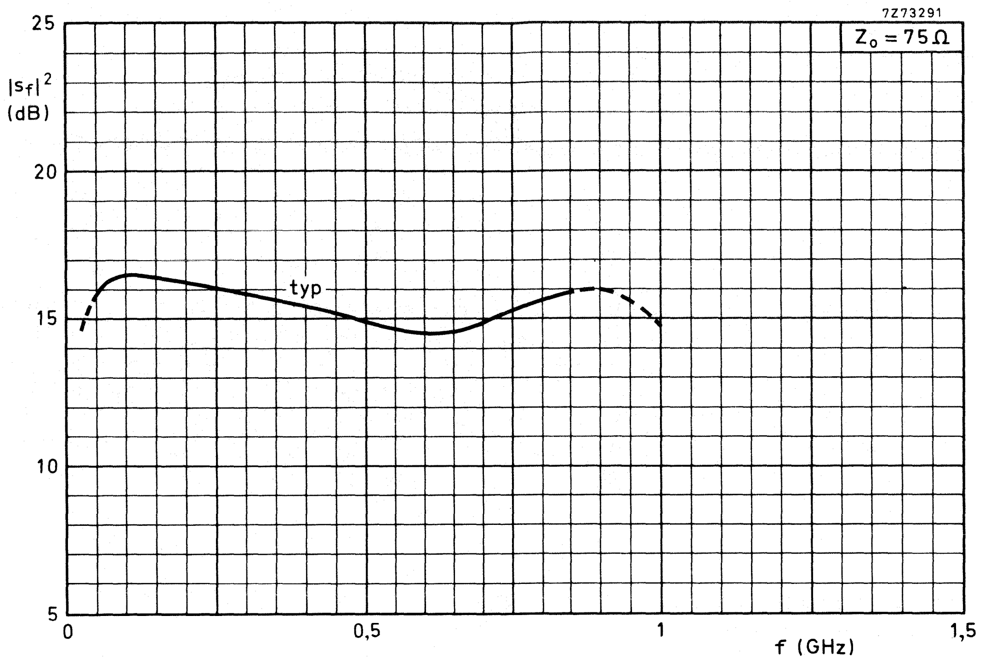

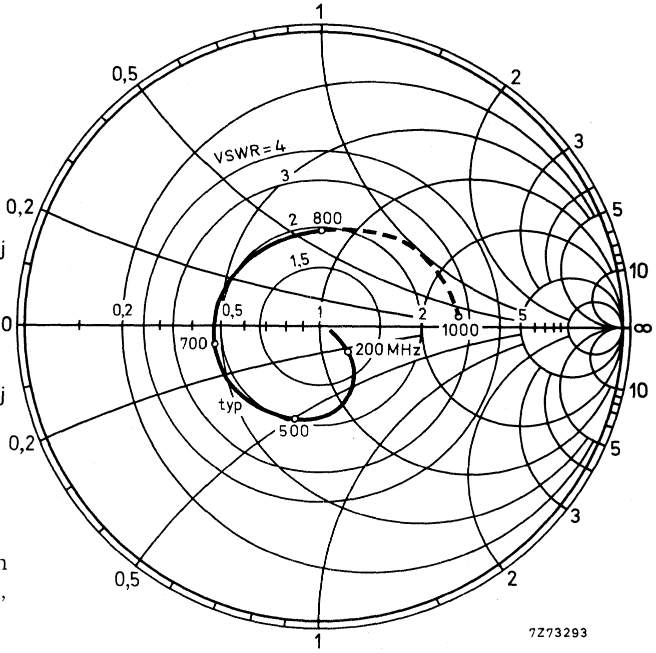

Input impedance derived from input reflection coefficient s_i, co-ordinates in ohm x 75.

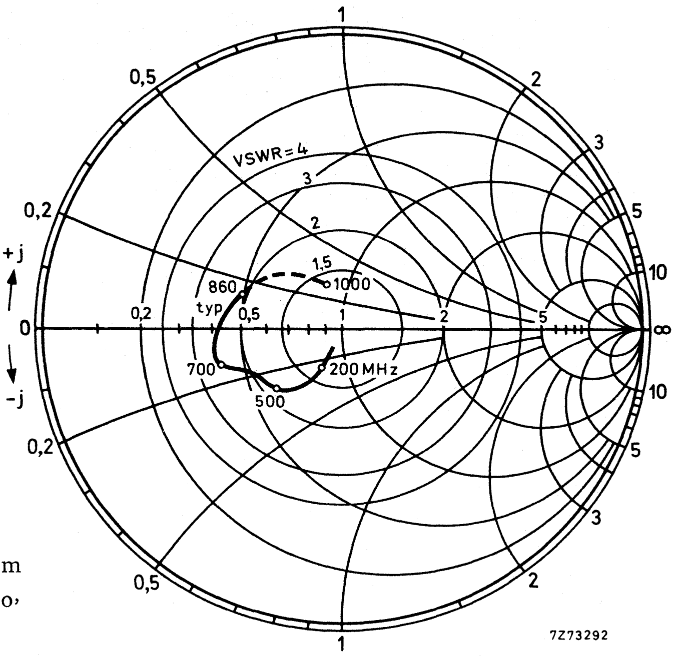

Output impedance derived from output reflection coefficient s_o, co-ordinates in ohm x 75.

HYBRID VHF/UHF WIDE BAND AMPLIFIER

Two-stage wide-band amplifier in the hybrid technique, designed for use in mast-head booster-amplifiers, as pre-amplifier in MATV systems, and as general-purpose amplifier for v.h.f. and u.h.f. applications.

QUICK REFERENCE DATA				
Frequency range	f		40 to 860	MHz
Source and load (characteristic) impedance	$R_S = R_\ell = Z_o$	=	75	Ω
Transducer gain	$G_{tr} = \|s_f\|^2$	typ.	15,5	dB
Flatness of frequency response	$\pm\Delta \|s_f\|^2$	typ.	1	dB
Output voltage at −60 dB intermodulation distortion (DIN45004, 3-tone)	$V_{o(rms)}$	>	98	dBµV
Noise figure	F	typ.	6	dB
D.C. supply voltage	V_B	=	24	V ±10%
Operating ambient temperature	T_{amb}		−20 to + 70	°C

ENCAPSULATION 7-pin, in-line, resin-coated body, see MECHANICAL DATA

CIRCUIT DIAGRAM

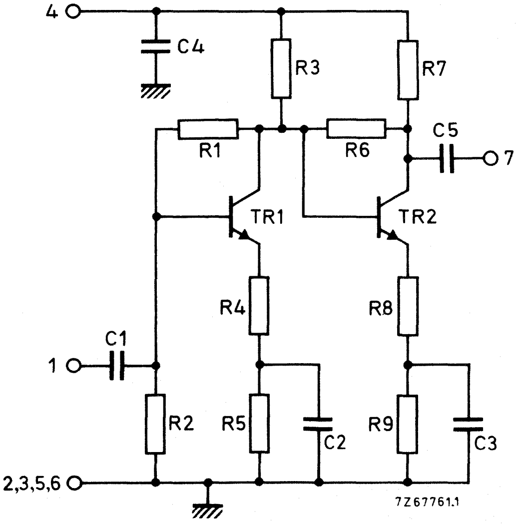

RATINGS Limiting values in accordance with the Absolute Maximum System (IEC 134)

Operating ambient temperature	T_{amb}		−20 to +70	°C
Storage temperature	T_{stg}		−40 to +125	°C
D.C. supply voltage	V_B	max.	28	V
Peak voltages on pins 1 and 7	V_{1M}, V_{7M}	max.	28	V
	$-V_{1M}$, $-V_{7M}$	max.	10	V
Peak incident powers on pins 1 and 7	P_{I1M}, P_{I7M}	max.	100	mW

CHARACTERISTICS

Measuring conditions

V.H.F.-U.H.F. test socket	catalogue no. 3504 110 01840 *			
Ambient temperature	T_{amb}	=	25	°C
D.C. supply voltage	V_B	=	24	V
Source impedance and load impedance	R_s, R_ℓ	=	75	Ω
Characteristic impedance of h.f. connections	Z_o	=	75	Ω
Frequency range	f	=	40 to 860	MHz

Performance

Supply current	I_B	typ.	33	mA
Transducer gain	$G_{tr} = \lvert s_f \rvert^2$		13 to 18	dB
		typ.	15,5	dB
Flatness of frequency response	$\pm\Delta \lvert s_f \rvert^2$	typ.	1	dB
Individual maximum v.s.w.r.				
input	$VSWR_{(i)}$	typ.	2,5	**
output	$VSWR_{(o)}$	typ.	2,0	**
Back attenuation				
f = 100 MHz	$\lvert s_r \rvert^2$	typ.	30	dB
f = 860 MHz	$\lvert s_r \rvert^2$	typ.	26	dB
Output voltage at −60 dB intermodulation distortion (DIN45004, par. 6.3: 3-tone)	$V_{o(rms)}$	>	98	dBμV
		typ.	100	dBμV
Noise figure	F	typ.	6	dB

s-parameters:	$s_f = s_{21}$	$s_i = s_{11}$
	$s_r = s_{12}$	$s_o = s_{22}$

---

* This socket can be made available for customer reference purposes.

** Highest value, for a sample, occurring in the frequency range.

OPERATING CONDITIONS

Ambient temperature range	T_{amb}		−20 to + 70	°C
D.C. supply voltage	V_B	=	24	V ±10%
Frequency range	f		40 to 860	MHz
Source impedance and load impedance	R_s, R_ℓ	=	75	Ω

MECHANICAL DATA

Dimensions in mm

Encapsulation

The device is resin coated.

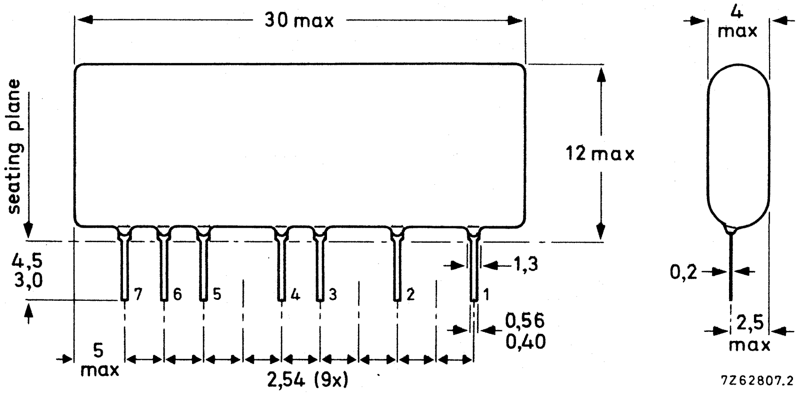

Terminal connections

1 = Input
2, 3, 5, 6 = Common
4 = Supply (+)
7 = Output

Soldering recommendations

Hand soldering

Maximum contact time for a soldering-iron temperature of 260 °C; up to seating plane:	5	s

Dip or wave soldering

260 °C is the maximum permissible temperature of the solder; it must not be in contact with the joint for more than 5 seconds. The total contact time of successive solder waves must not exceed 5 seconds.
The device may be mounted against the printed-circuit board, but the temperature of the device must not exceed 125 °C. If the printed-circuit board has been pre-heated, forced cooling may be necessary immediately after soldering to keep the temperature below the allowable limit.

Mounting recommendations

The module should preferably be mounted on double-sided printed-circuit board, see the example shown below.
Input and output should be connected to 75 Ω tracks.
The connections to the "common" pins should be as close to the seating plane as possible.

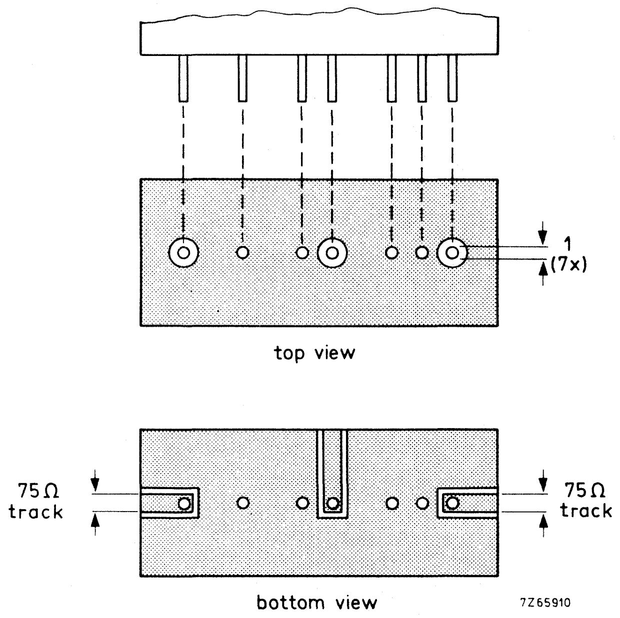

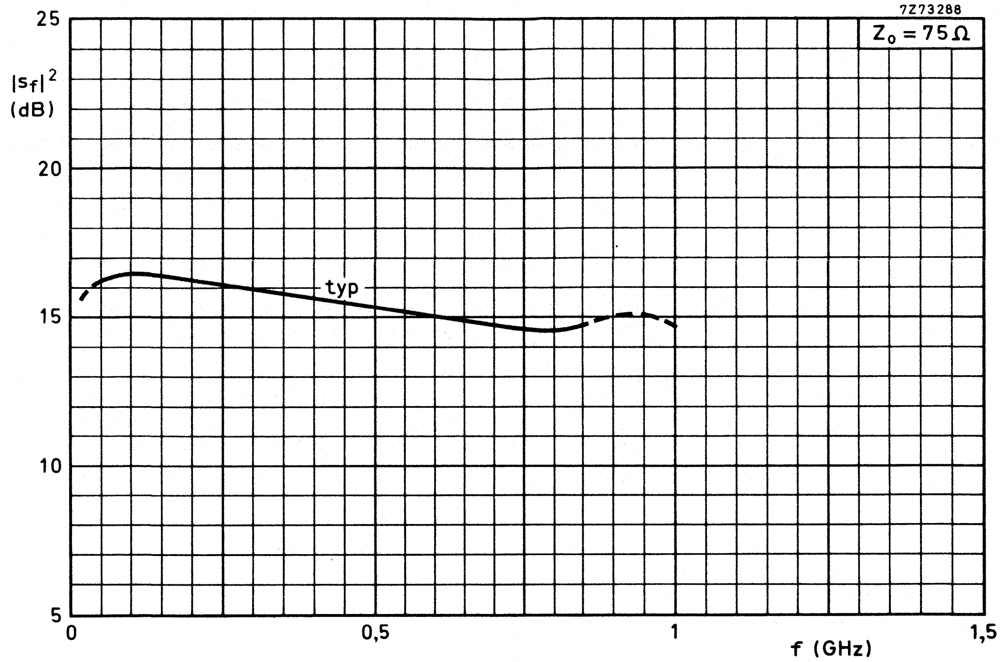

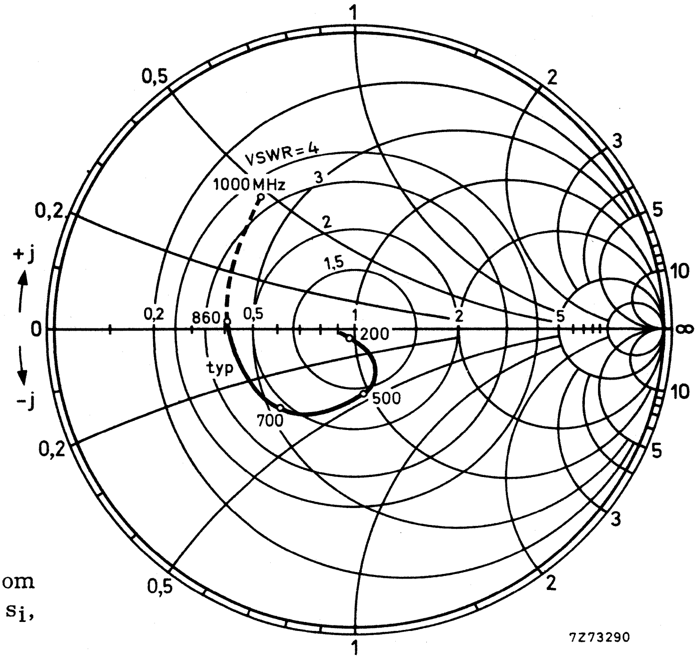

Input impedance derived from input reflection coefficient s_i, co-ordinates in ohm x 75.

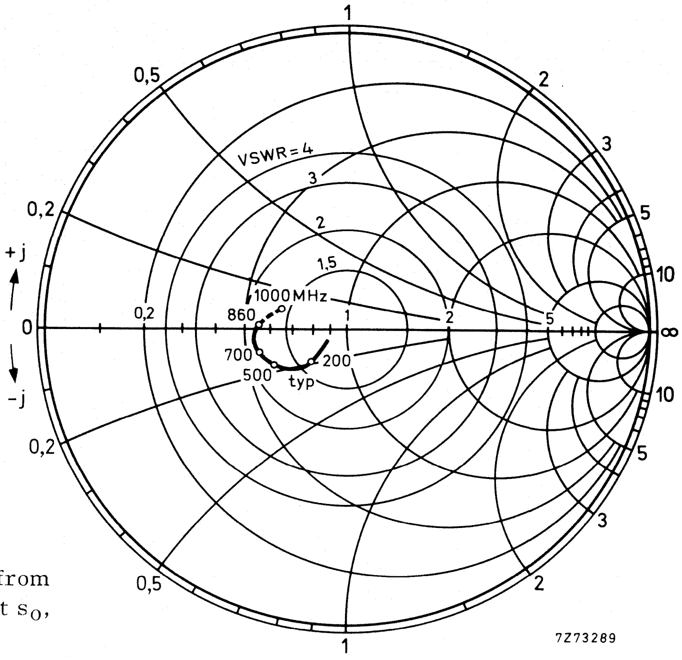

Output impedance derived from output reflection coefficient s_o, co-ordinates in ohm x 75.

HYBRID VHF/UHF WIDE-BAND AMPLIFIER

Two-stage wide-band amplifier in the hybrid technique, designed for use as distribution amplifier in MATV and CATV systems and as general-purpose amplifier for v.h.f. and u.h.f. applications. Except for the encapsulation coating, the OM322 and OM175 have the same specification. OM322 will replace OM175.

QUICK REFERENCE DATA				
Frequency range	f		40 to 860	MHz
Source and load (characteristic) impedance	$R_S = R_\ell = Z_O$		75	Ω
Transducer gain	$G_{tr} = \|s_f\|^2$	typ.	15	dB
Flatness of frequency response	$\pm\Delta \|s_f\|^2$	typ.	0,3	dB
Output voltage at −60 dB intermodulation distortion (DIN45004, 3-tone)	$V_{o(rms)}$	>	103	dBμV
Noise figure	F	typ.	7	dB
D.C. supply voltage	V_B	=	24	V ±10%
Operating ambient temperature	T_{amb}		−20 to +70	°C

ENCAPSULATION 5-lead, resin coated body on metal base, see MECHANICAL DATA

CIRCUIT DIAGRAM

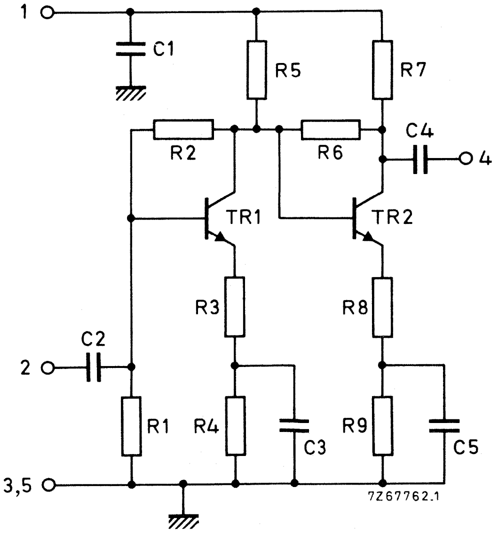

RATINGS Limiting values in accordance with the Absolute Maximum System (IEC134)

Operating ambient temperature	T_{amb}		-20 to +70	°C
Operating mounting-base temperature	T_{mb}	max.	100	°C
Storage temperature	T_{stg}		-40 to +125	°C
D.C. supply voltage	V_B	max.	28	V
Peak voltages on pins 2 and 4	V_{2M}, V_{4M} $-V_{2M}$, $-V_{4M}$	max. max.	28 10	V V
Peak incident powers on pins 2 and 4	P_{I2M}, P_{I4M}	max.	100	mW

CHARACTERISTICS

Measuring conditions

Ambient temperature	T_{amb}	=	25	°C
D.C. supply voltage	V_B	=	24	V
Source impedance and load impedance	R_S, R_ℓ	=	75	Ω
Characteristic impedance of h.f. connections	Z_o	=	75	Ω
Frequency range	f	=	40 to 860	MHz

Performance

Supply current	I_B	typ.	60	mA
Transducer gain	$G_{tr} = \|s_f\|^2$	 typ.	14 to 16 15	dB dB
Flatness of frequency response	$\pm\Delta\|s_f\|^2$	typ. <	0, 3 0, 5	dB dB
Individual maximum v.s.w.r.				
input	$VSWR_{(i)}$	typ.	1, 7	[1])
output	$VSWR_{(o)}$	typ.	1, 7	[1])
Back attenuation				
f = 100 MHz	$\|s_r\|^2$	typ.	31	dB
f = 860 MHz	$\|s_r\|^2$	typ.	25	dB
Output voltage at −60 dB intermodulation distortion (DIN45004, par. 6.3: 3-tone)	$V_{o(rms)}$	> typ.	103 105	dBμV dBμV
Noise figure	F	typ.	7	dB

s-parameters:	$s_f = s_{21}$	$s_i = s_{11}$
	$s_r = s_{12}$	$s_o = s_{22}$

---

[1]) Highest value, for a sample, occurring in the frequency range.

OPERATING CONDITIONS

Ambient temperature range	T_{amb}		−20 to +70	°C
D.C. supply voltage	V_B	=	24	V ±10%
Frequency range	f		40 to 860	MHz
Source impedance and load impedance	R_S, R_ℓ	=	75	Ω

MECHANICAL DATA

Dimensions in mm

Encapsulation

The device is resin coated and mounted on a metal mounting base.

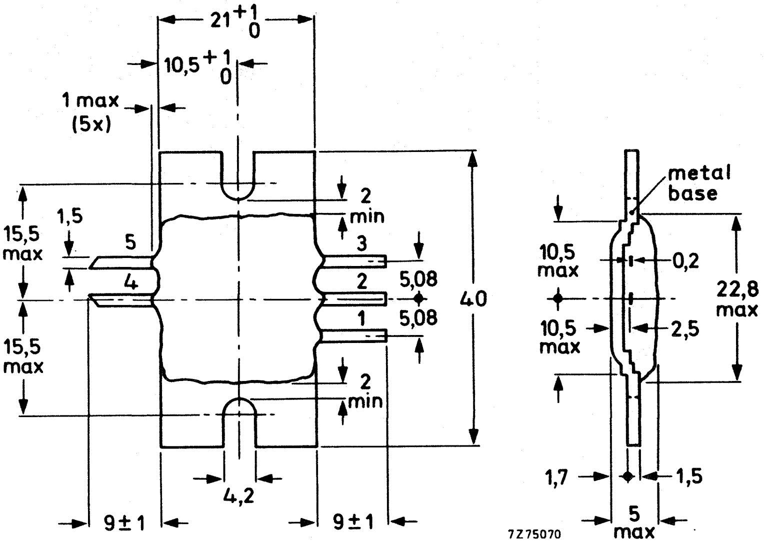

Terminal connections

1 = Supply (+)
2 = Input
3 and 5 = Common (internally connected to metal base)
4 = Output

Soldering recommendations

Maximum contact time for a soldering-iron temperature of 260 °C 5 s

Mounting recommendations

The module should preferably be mounted on a double-sided printed-circuit board, see the examples shown below. Input and output should be connected to 75 Ω tracks.

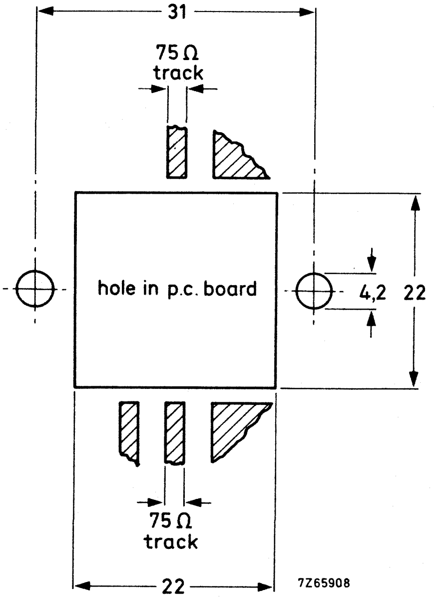

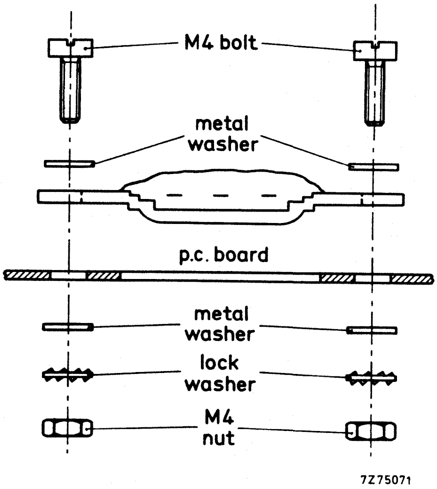

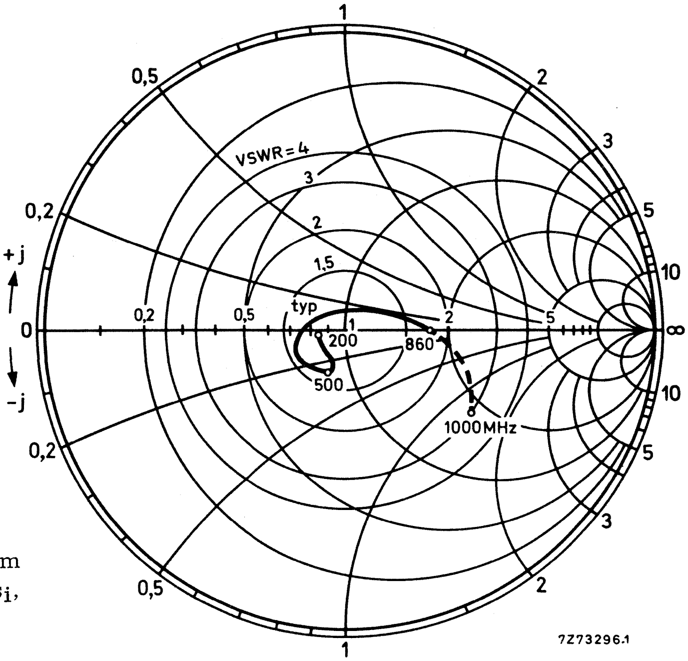

Input impedance derived from input reflection coefficient s_i, co-ordinates in ohm x 75

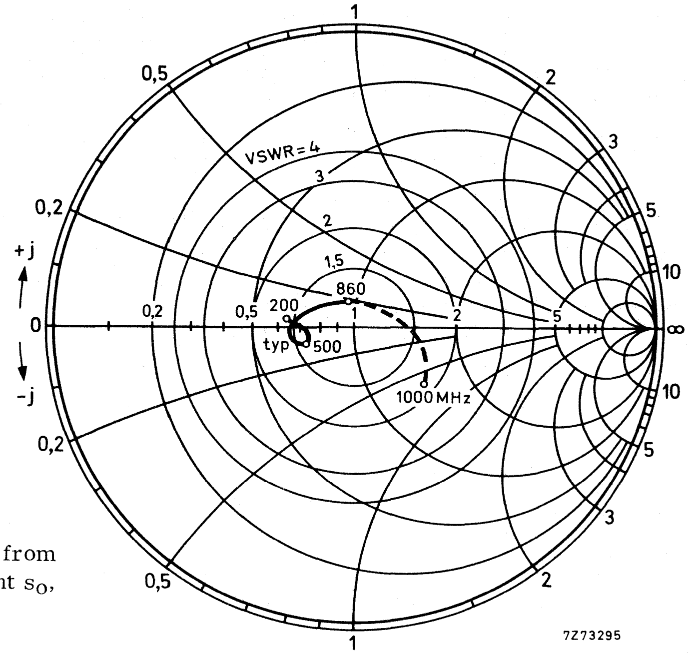

Output impedance derived from output reflection coefficient s_o, co-ordinates in ohm x 75

HYBRID V.H.F./U.H.F. WIDE-BAND AMPLIFIER

Two-stage wide-band amplifier in the hybrid technique, designed for use in MATV systems, and as general purpose amplifier for v.h.f. and u.h.f. applications requiring a high output level.
The OM323A needs an external collector-coil and blocking capacitor, whereas, the OM323 has these components built-in.

QUICK REFERENCE DATA

Frequency range	f		40 to 860	MHz
Source and load (characteristic) impedance	$R_s = R_\ell = Z_o$	=	75	Ω
Transducer gain	$G_{tr} = \|s_f\|^2$	typ	15	dB
Flatness of frequency response	$\pm\Delta\,\|s_f\|^2$	typ	0,5	dB
Output voltage at −60 dB intermodulation distortion (DIN45004, 3-tone); f = 470 MHz	$V_{o(rms)}$	typ	113	dBμV
Noise figure	F	typ	9	dB
D.C. supply voltage	V_B	=	24	V ± 10%
Operating mounting-base temperature	T_{mb}		−30 to +100	°C

ENCAPSULATION 9-pin, in-line, resin-coated body on a right-angled metal mounting tab, see MECHANICAL DATA

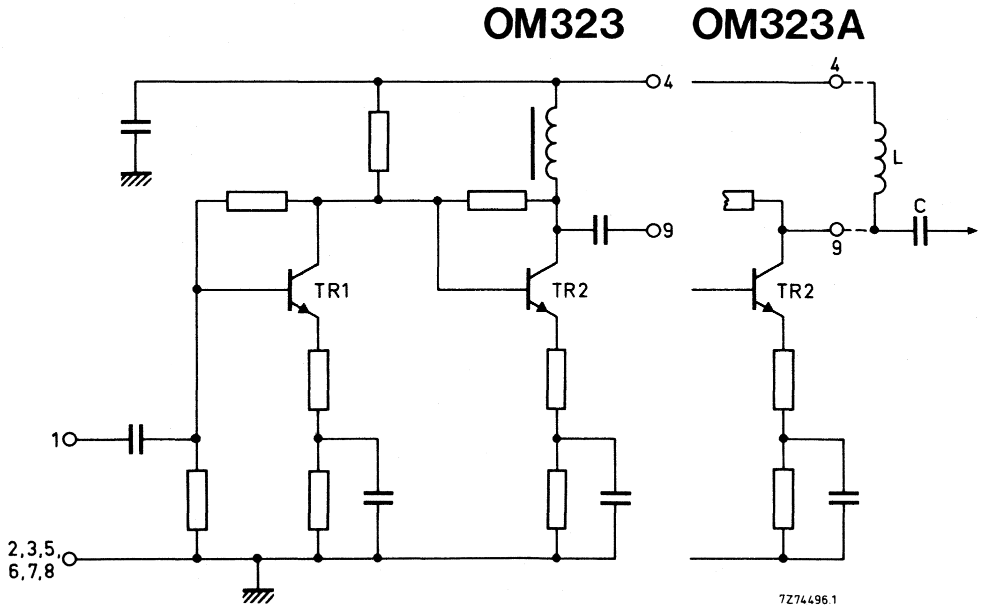

Fig. 1 Circuit diagram.

RATINGS Limiting values in accordance with the Absolute Maximum System (IEC134)

Operating mounting-base temperature	T_{mb}		−30 to +100	°C
Storage temperature	T_{stg}		−40 to +125	°C
D.C. supply voltage	V_B	max	28	V
Peak voltages on pin 1	V_{1M}	max	28	V
	$-V_{1M}$	max	24	V
Peak voltages on pin 9	V_{9M}	max	28	V
	$-V_{9M}$	max	4	V
Peak incident powers on pins 1 and 9	P_{I1M}, P_{I9M}	max	100	mW

CHARACTERISTICS

Measuring conditions

V.H.F.—U.H.F. test socket	catalogue no. 3504 110 01830 *			
Mounting base temperature	T_{mb}	=	25	°C
D.C. supply voltage	V_B	=	24	V
Source impedance and load impedance	R_s, R_ℓ	=	75	Ω
Characteristic impedance of h.f. connections	Z_o	=	75	Ω
Frequency range	f	=	40 to 860	MHz

Performance

Supply current	I_B		95 to 105	mA
		typ	100	mA
Transducer gain	$G_{tr} = \lvert s_f \rvert^2$		14 to 17	dB
		typ	15	dB
Flatness of frequency response	$\pm\Delta \lvert s_f \rvert^2$	typ	0,5	dB
Individual maximum v.s.w.r.				
input	$VSWR_{(i)}$	typ	1,9	**
output	$VSWR_{(o)}$	typ	2,3	**
Back attenuation				
f = 100 MHz	$\lvert s_r \rvert^2$	typ	29	dB
f = 650 MHz	$\lvert s_r \rvert^2$	typ	25,5	dB
f = 860 MHz	$\lvert s_r \rvert^2$	typ	24	dB

* This socket can be made available for customer reference purposes.
** Highest value, for a sample, occurring in the frequency range.

Output voltage at −60 dB intermodulation distortion (DIN45004, par. 6.3: 3-tone)				
f = 40–230 MHz	$V_{o(rms)}$	> typ	112 114	dBμV dBμV
f = 470 MHz	$V_{o(rms)}$	typ	113	dBμV
f = 860 MHz	$V_{o(rms)}$	typ	112	dBμV
Noise figure				
channel 2	F	typ	8	dB
channel 65	F	typ	9	dB

s-parameters: $s_f = s_{21}$ $s_i = s_{11}$
$s_r = s_{12}$ $s_o = s_{22}$

OPERATING CONDITIONS

Mounting-base temperature range	T_{mb}		−30 to +100	°C ←
D.C. supply voltage	V_B	=	24	V ± 10%
Frequency range	f		40 to 860	MHz
Source impedance and load impedance	R_s, R_ℓ	=	75	Ω

THERMAL DATA

a. The maximum permissible temperature at the mounting base is 100 °C.

b. When the mounting tab is screwed to a double-sided printed-circuit board with dimensions 37 mm x 51 mm, its temperature will be 57 °C above the temperature of the surrounding free air.

c. When a heatsink is fixed to the mounting tab and the pins are soldered into a double-sided printed-circuit board with dimensions 37 mm x 51 mm, the tab will reach the temperatures stated in the following table.

Notes

1. When the device is fixed only to a heatsink, not to a printed-circuit board, the values of the second column of the table should be increased by 2 °C and those of the third column decreased by 2 °C.
2. The user is free to realize proper cooling by using differently shaped sinks, or, preferably, by fixing the tab to any convenient part of the equipment (e.g. a wall of the metal cabinet).

heatsink data thickness 1 mm	$T_{mb} - T_{amb}$ °C	$T_{amb\ max}$ °C
Bright aluminium heatsink L-shaped bar, length 100 mm, height 165 mm	24	76
Blackened aluminium heatsink L-shaped bar; length 50 mm, height 70 mm	23	77

MECHANICAL DATA

Dimensions in mm

The amplifier is resin coated and has a metal mounting tab at a right angle to the encapsulation part.

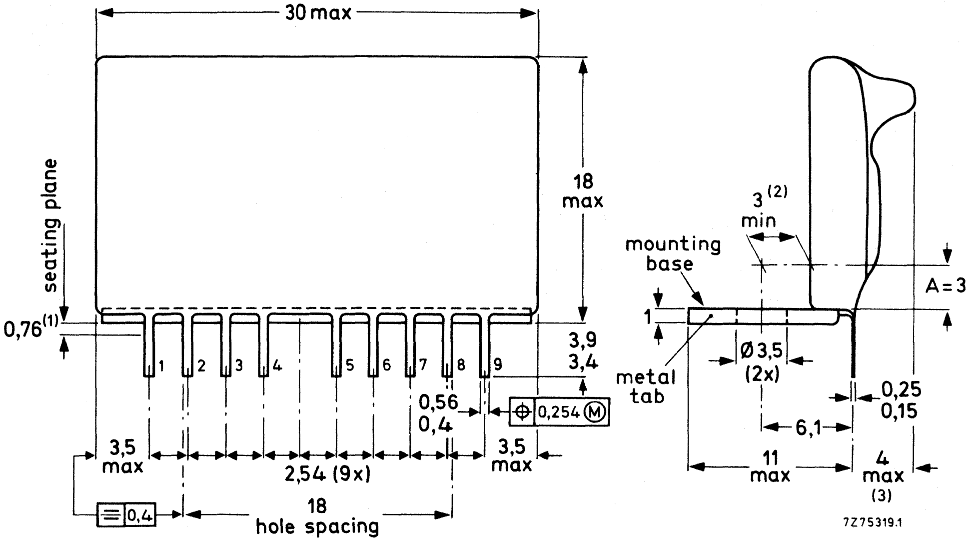

(1) Tolerance applies within this zone.
(2) Distance applies within zone A.
(3) For the OM323A: 3 mm maximum.

Fig. 2 Encapsulation.

Terminal connections

1 = Input
2, 3, 5, 6, 7, 8 = Common, connected to mounting tab
4 = Supply (+)
9 = Output

Soldering recommendations

Hand soldering

Maximum contact time for a soldering-iron temperature of 260 °C up to the seating plane is 5 s.

Dip or wave soldering

260 °C is the maximum permissible temperature of the solder; it must not be in contact with the joint for more than 5 seconds. The total contact time of successive solder waves must not exceed 5 seconds. The device may be mounted against the printed-circuit board, but the temperature of the device must not exceed 125 °C. If the printed-circuit board has been pre-heated, forced cooling may be necessary immediately after soldering to keep the temperature below the allowable limit.

Mounting recommendations

The module should preferably be mounted on a double-sided printed-circuit board, see the following example. An example is also given of heatsink mounting.
Input and output should be connected to 75 Ω tracks.
The connections to the common pins should be as close to the seating plane as possible.

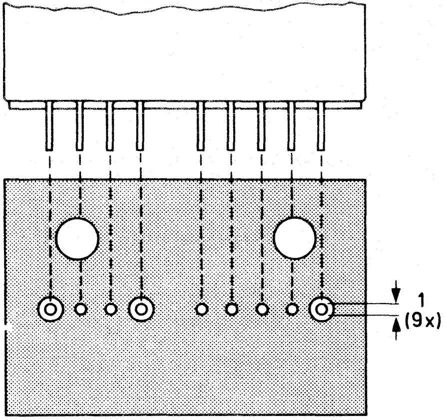

top view

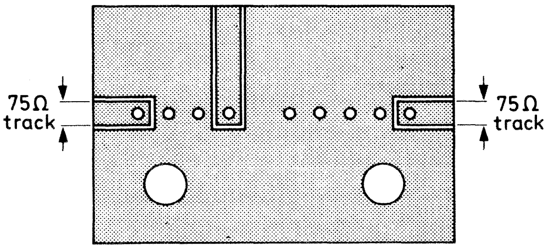

OM323: bottom view

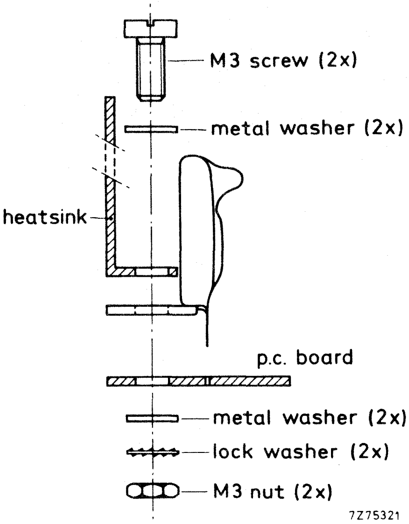

Fig. 4 Example of heatsink mounting.

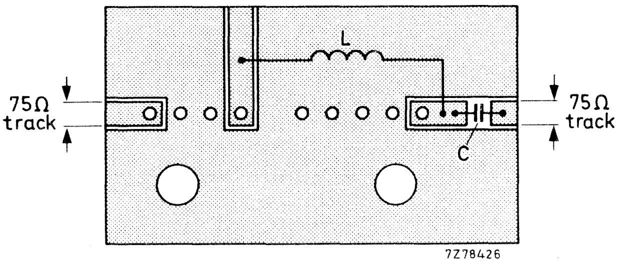

OM323A: bottom view

$L > 5\ \mu H$; e.g. catalogue no. 3122 108 20150 or 27 turns enamelled Cu wire (0,3 mm) wound on a ferrite core with a diameter of 1,6 mm.
$C > 220$ pF ceramic capacitor.

Fig. 3 Printed-circuit board holes and tracks for the OM323 and OM323A.

HYBRID VHF/UHF WIDE-BAND AMPLIFIER

Three-stage wide-band amplifier in the hybrid technique, designed for use in mast-head booster-amplifiers, as pre-amplifier in MATV systems, and as general-purpose amplifier for v.h.f. and u.h.f. applications.

QUICK REFERENCE DATA				
Frequency range	f		40 to 860	MHz
Source and load (characteristic) impedance	$R_S = R_\ell = Z_o$	=	75	Ω
Transducer gain	$G_{tr} = \|s_f\|^2$	typ.	27	dB
Flatness of frequency response	$\pm\Delta \|s_f\|^2$	typ.	1,6	dB
Output voltage at −60 dB intermodulation distortion (DIN45004, 3-tone)	$V_{o(rms)}$	>	98	dBμV
Noise figure	F	typ.	5,5	dB
D.C. supply voltage	V_B	=	24	V ±10%
Operating ambient temperature	T_{amb}		−20 to + 70	°C

ENCAPSULATION 7-pin, in-line, resin-coated body, see MECHANICAL DATA

CIRCUIT DIAGRAM

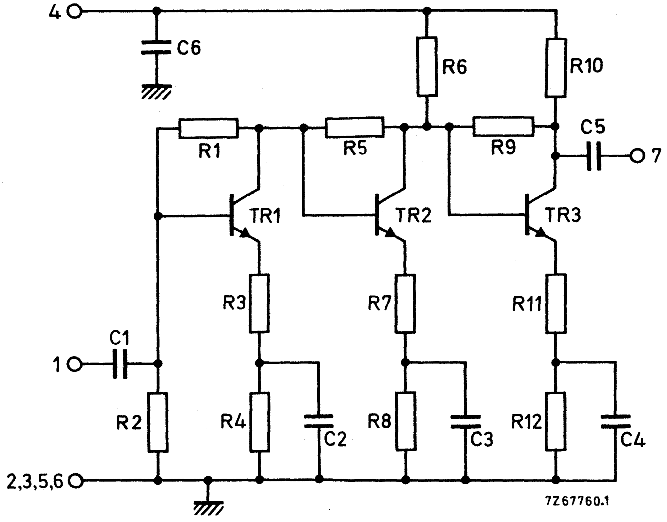

RATINGS Limiting values in accordance with the Absolute Maximum System (IEC 134)

Operating ambient temperature	T_{amb}		−20 to +70	°C
Storage temperature	T_{stg}		−40 to +125	°C
D.C. supply voltage	V_B	max.	28	V
Peak voltages on pins 1 and 7	V_{1M}, V_{7M}	max.	28	V
	$-V_{1M}$, $-V_{7M}$	max.	10	V
Peak incident powers on pins 1 and 7	P_{I1M}, P_{I7M}	max.	100	mW

CHARACTERISTICS

Measuring conditions

V.H.F.-U.H.F. test socket	catalogue no. 3504 110 01840 *			
Ambient temperature	T_{amb}	=	25	°C
D.C. supply voltage	V_B	=	24	V
Source impedance and load impedance	R_s, R_ℓ	=	75	Ω
Characteristic impedance of h.f. connections	Z_o	=	75	Ω
Frequency range	f	=	40 to 860	MHz

Performance

Supply current	I_B	typ.	35	mA
Transducer gain	$G_{tr} = \vert s_f \vert^2$		23 to 31	dB
		typ.	27	dB
Flatness of frequency response	$\pm\Delta \vert s_f \vert^2$	typ.	1,6	dB
Individual maximum v.s.w.r.				
input	$VSWR_{(i)}$	typ.	1,9	**
output	$VSWR_{(o)}$	typ.	3,2	**
Back attenuation				
f = 100 MHz	$\vert s_r \vert^2$	typ.	46	dB
f = 860 MHz	$\vert s_r \vert^2$	typ.	40	dB
Output voltage at −60 dB intermodulation distortion (DIN45004, par. 6.3: 3-tone)	$V_{o(rms)}$	>	98	dBμV
		typ.	101	dBμV
Noise figure	F	typ.	5,5	dB

s-parameters:	$s_f = s_{21}$	$s_i = s_{11}$
	$s_r = s_{12}$	$s_o = s_{22}$

---

* This socket can be made available for customer reference purposes.

** Highest value, for a sample, occurring in the frequency range.

OPERATING CONDITIONS

Ambient temperature range	T_{amb}		−20 to + 70	°C
D.C. supply voltage	V_B	=	24	V ±10%
Frequency range	f		40 to 860	MHz
Source impedance and load impedance	R_S, R_ℓ	=	75	Ω

MECHANICAL DATA

Dimensions in mm

Encapsulation

The device is resin coated.

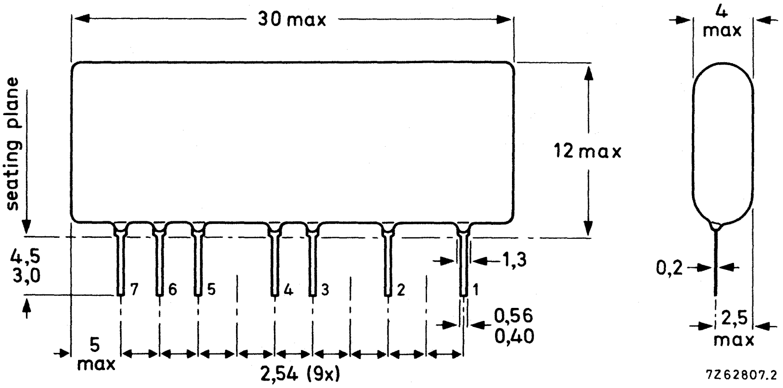

Terminal connections

1 = Input
2, 3, 5, 6 = Common
4 = Supply (+)
7 = Output

Soldering recommendations

Hand soldering

Maximum contact time for a soldering-iron temperature of 260 °C; up to seating plane: 5 s

Dip or wave soldering

260 °C is the maximum permissible temperature of the solder; it must not be in contact with the joint for more than 5 seconds. The total contact time of successive solder waves must not exceed 5 seconds.
The device may be mounted against the printed-circuit board, but the temperature of the device must not exceed 125 °C. If the printed-circuit board has been pre-heated, forced cooling may be necessary immediately after soldering to keep the temperature below the allowable limit.

Mounting recommendations

The module should preferably be mounted on double-sided printed-circuit board, see the example shown below.
Input and output should be connected to 75 Ω tracks.
The connections to the "common" pins should be as close to the seating plane as possible.

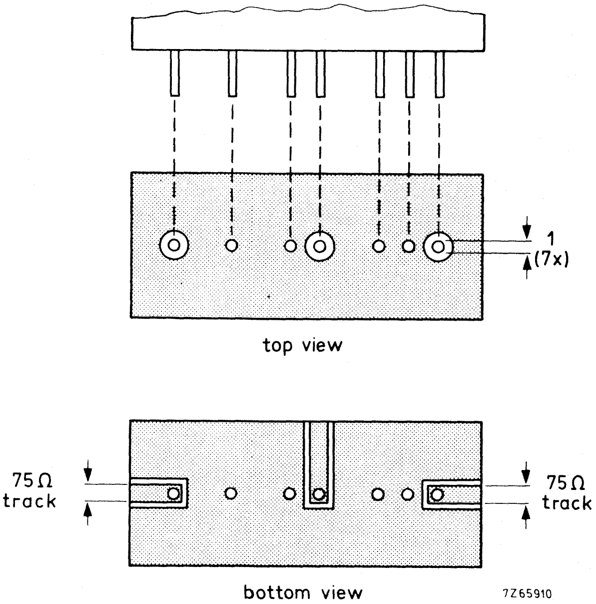

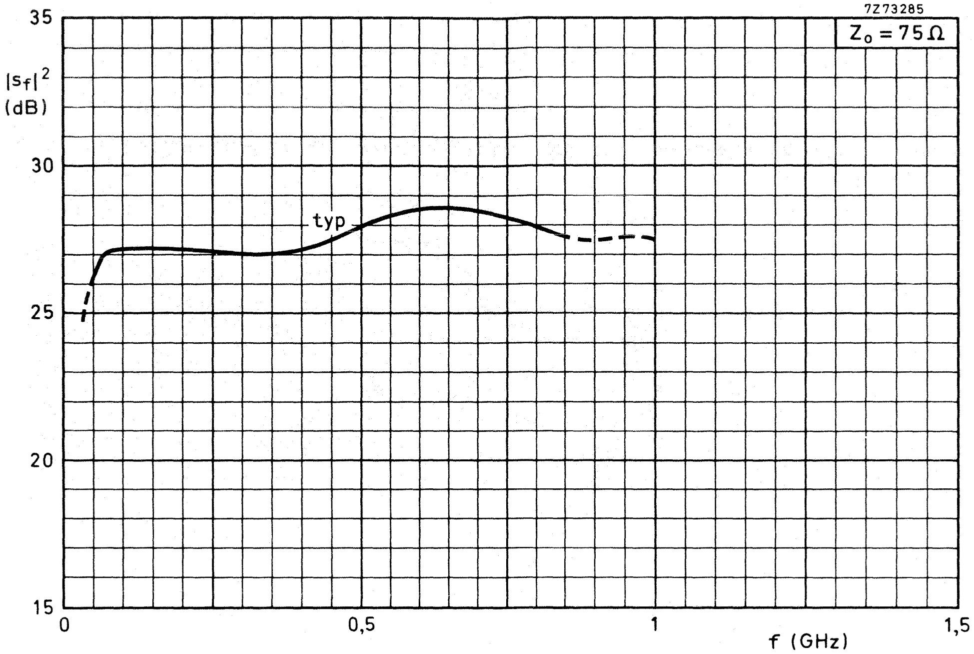

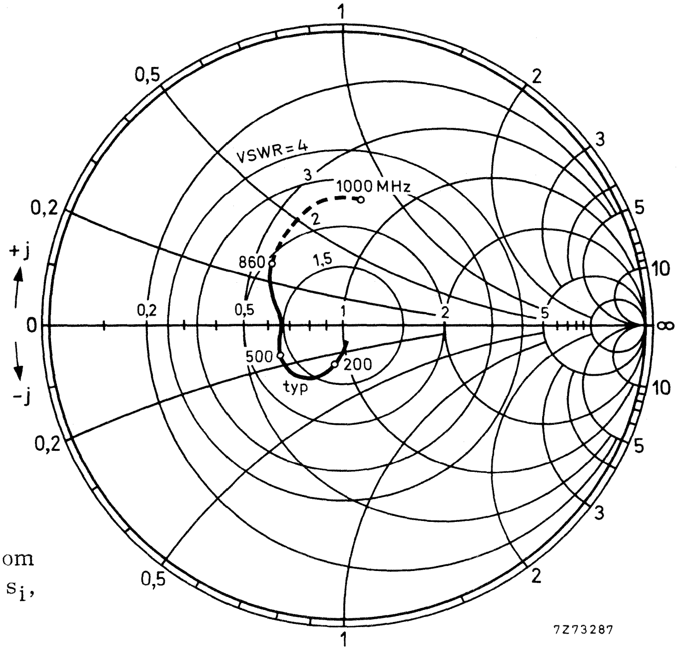

Input impedance derived from input reflection coefficient s_i, co-ordinates in ohm x 75.

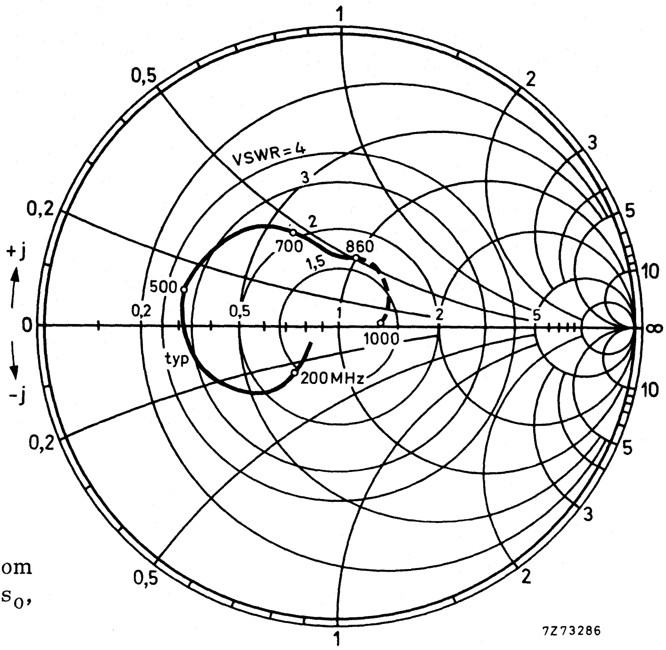

Output impedance derived from output reflection coefficient s_o, co-ordinates in ohm x 75.

HYBRID VHF/UHF WIDE-BAND AMPLIFIER

Three-stage wide-band amplifier in the hybrid technique, designed for use in mast-head booster-amplifiers, as preamplifier in MATV systems, and as general-purpose amplifier for v.h.f. and u.h.f. applications.

QUICK REFERENCE DATA

Frequency range	f		40 to 860	MHz
Source and load (characteristic) impedance	$R_s = R_\ell = Z_o$	=	75	Ω
Transducer gain	$G_{tr} = \|s_f\|^2$	typ.	22	dB
Flatness of frequency response	$\pm\Delta\|s_f\|^2$	typ.	1,0	dB
Output voltage at −60 dB intermodulation distortion (DIN 45004, 3-tone)	$V_{o(rms)}$	>	105	dBμV
Noise figure	F	typ.	7	dB
D.C. supply voltage	V_B	=	24	V ±10%
Operating ambient temperature	T_{amb}		−20 to +70	°C

ENCAPSULATION 7-pin, in-line, resin-coated body, see MECHANICAL DATA

CIRCUIT DIAGRAM

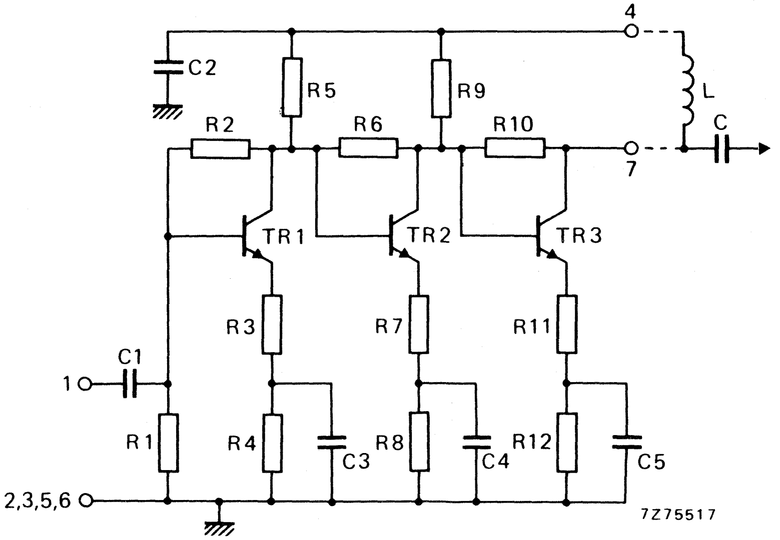

RATINGS

Limiting values in accordance with the Absolute Maximum System (IEC 134)

Operating ambient temperature	T_{amb}		−20 to +70	°C
Storage temperature	T_{stg}		−40 to +125	°C
D.C. supply voltage	V_B	max.	28	V
Peak voltages on pins 1 and 7	V_{1M}, V_{7M}	max.	28	V
	$-V_{1M}, -V_{7M}$	max.	10	V
Peak incident powers on pins 1 and 7	P_{I1M}, P_{I7M}	max.	100	mW

CHARACTERISTICS

Measuring conditions

V.H.F.-U.H.F. test socket	catalogue no. 3504 110 01840 *			
Ambient temperature	T_{amb}	=	25	°C
D.C. supply voltage	V_B	=	24	V
Source impedance and load impedance	R_s, R_ℓ	=	75	Ω
Characteristic impedance of h.f. connections	Z_o	=	75	Ω
Frequency range	f	=	40 to 860	MHz

Performance

Supply current	I_B	typ.	65	mA
Transducer gain	$G_{tr} = \lvert s_f \rvert^2$		20 to 24	dB
		typ.	22	dB
Flatness of frequency response	$\pm\Delta\lvert s_f \rvert^2$	typ.	1,0	dB
Individual maximum v.s.w.r.				
input	$VSWR_{(i)}$	typ.	1,4	**
output	$VSWR_{(o)}$	typ.	1,6	**
Back attenuation				
f = 100 MHz	$\lvert s_r \rvert^2$	typ.	42	dB
f = 860 MHz	$\lvert s_r \rvert^2$	typ.	40	dB
Output voltage at −60 dB intermodulation distortion (DIN 45004, par. 6.3: 3-tone)	$V_{o(rms)}$	>	105	dBμV
		typ.	107	dBμV
Noise figure	F	typ.	7	dB

s-parameters:	$s_f = s_{21}$	$s_i = s_{11}$
	$s_r = s_{12}$	$s_o = s_{22}$

---

* This socket can be made available for customer reference purposes.

** Highest value, for a sample, occurring in the frequency range.

OPERATING CONDITIONS

Ambient temperature range	T_{amb}	−20 to +70	°C
D.C. supply voltage	V_B	= 24	V ±10%
Frequency range	f	40 to 860	MHz
Source impedance and load impedance	R_s, R_ℓ	= 75	Ω

MECHANICAL DATA

Dimensions in mm

Encapsulation

The device is resin coated.

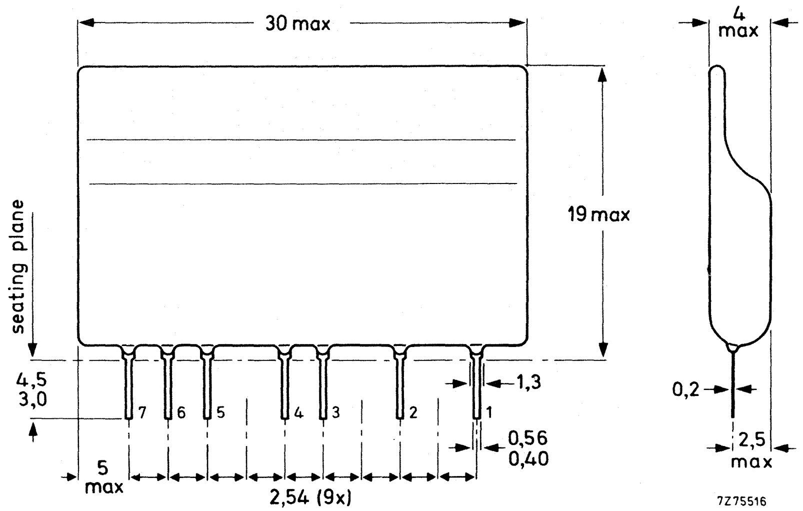

Terminal connections

1 = Input
2, 3, 5, 6 = Common
4 = Supply (+)
7 = Output.

Soldering recommendations

Hand soldering

Maximum contact time for a soldering-iron temperature of 260 °C up to the seating plane is 5 s.

Dip or wave soldering

260 °C is the maximum permissible temperature of the solder; it must not be in contact with the joint for more than 5 seconds. The total contact time of successive solder waves must not exceed 5 seconds. The device may be mounted against the printed-circuit board, but the temperature of the device must not exceed 125 °C. If the printed-circuit board has been pre-heated, forced cooling may be necessary immediately after soldering to keep the temperature below the allowable limit.

Mounting recommendations

The module should preferably be mounted on double-sided printed-circuit board, see the example shown below.

Input and output should be connected to 75 Ω tracks.

The connections to the 'common' pins should be as close to the seating plane as possible.

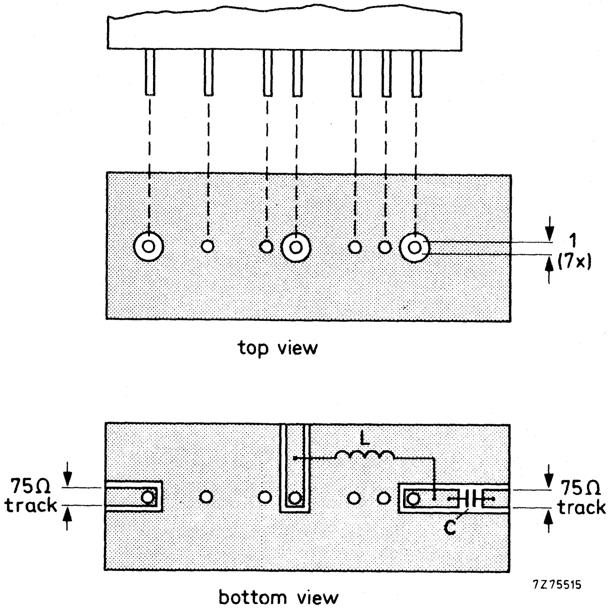

L > 5 μH; e.g. catalogue no. 3122 108 20150 or 27 turns enamelled Cu wire (0,3 mm) wound on a ferrite core with a diameter of 1,6 mm.

C > 220 pF ceramic capacitor.

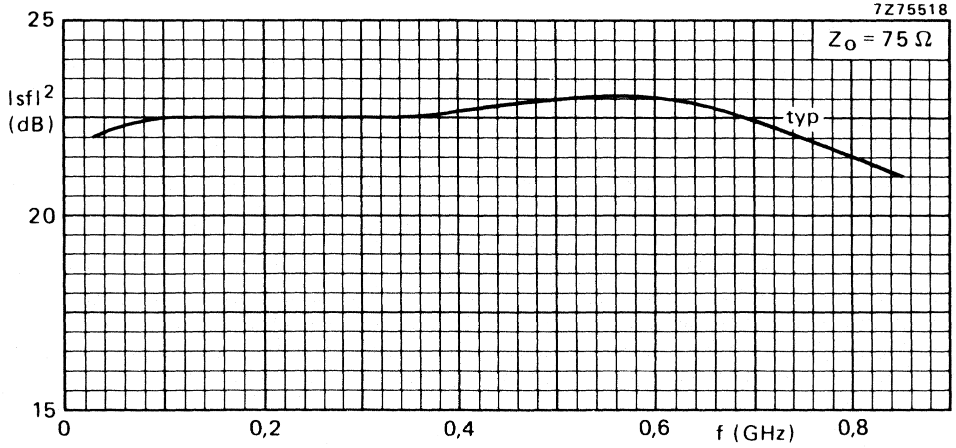

HYBRID V.H.F./U.H.F. WIDE-BAND AMPLIFIER

Three-stage wide-band amplifier in the hybrid technique, designed for use in MATV systems, and as general purpose amplifier for v.h.f. and u.h.f. applications requiring a high output level.
The OM337A needs an external collector-coil and blocking capacitor, whereas, the OM337 has these components built-in.

QUICK REFERENCE DATA

Frequency range	f		40 to 860	MHz
Source and load (characteristic) impedance	$R_s = R_\ell = Z_o$	=	75	Ω
Transducer gain	$G_{tr} = \lvert s_f \rvert^2$	typ.	26	dB
Flatness of frequency response	$\pm\Delta \lvert s_f \rvert^2$	typ.	1	dB
Output voltage at −60 dB intermodulation distortion (DIN45004, 3-tone); f = 470 MHz	$V_{o(rms)}$	typ.	112	dBμV
Noise figure	F	typ.	9,8	dB
D.C. supply voltage	V_B	=	24	V ± 10%
Operating mounting-base temperature	T_{mb}		−30 to +100	°C

ENCAPSULATION 9-pin, in-line, resin-coated body on a right-angled metal mounting tab, see MECHANICAL DATA

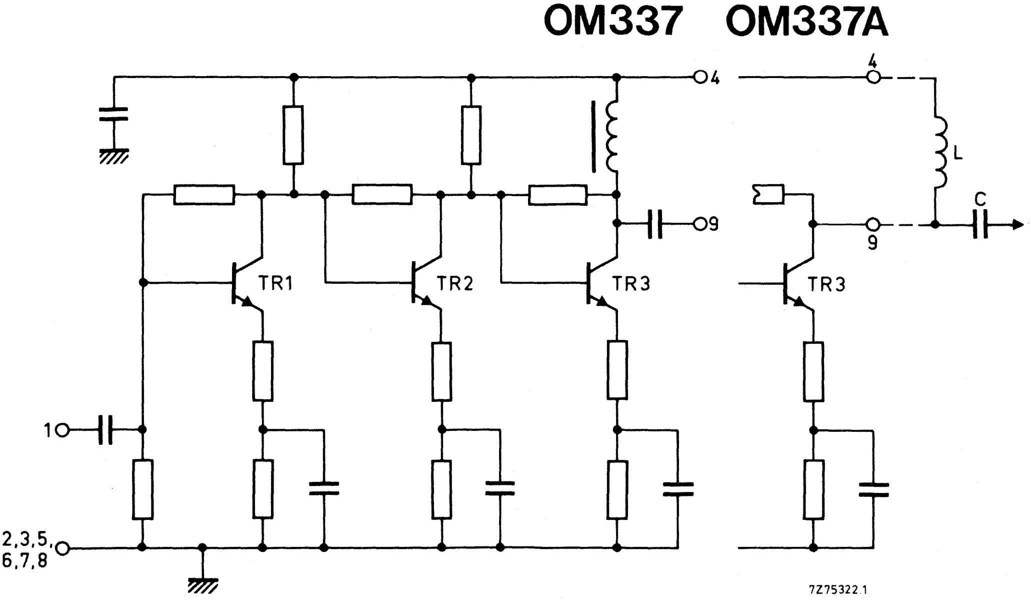

Fig. 1 Circuit diagram.

RATINGS Limiting values in accordance with the Absolute Maximum System (IEC134)

Operating mounting-base temperature	T_{mb}		−30 to +100	°C
Storage temperature	T_{stg}		−40 to +125	°C
D.C. supply voltage	V_B	max.	28	V
Peak voltages on pin 1	V_{1M}	max.	28	V
	$-V_{1M}$	max.	24	V
Peak voltages on pin 9	V_{9M}	max.	28	V
	$-V_{9M}$	max.	4	V
Peak incident powers on pins 1 and 9	P_{I1M}, P_{I9M}	max.	100	mW

CHARACTERISTICS

Measuring conditions

V.H.F.–U.H.F. test socket	catalogue no.		3504 110 01830*	
Mounting base temperature	T_{mb}	=	25	°C
D.C. supply voltage	V_B	=	24	V
Source impedance and load impedance	R_s, R_ℓ	=	75	Ω
Characteristic impedance of h.f. connections	Z_o	=	75	Ω
Frequency range	f	=	40 to 860	MHz

Performance

Supply current	I_B		110 to 120	mA
		typ.	115	mA
Transducer gain	$G_{tr} = \|s_f\|^2$		23 to 29	dB
		typ.	26	dB
Flatness of frequency response	$\pm\Delta \|s_f\|^2$	typ.	1	dB
Individual maximum v.s.w.r.				
input	$VSWR_{(i)}$	typ.	2,3	**
output	$VSWR_{(o)}$	typ.	1,8	**
Back attenuation				
f = 100 MHz	$\|s_r\|^2$	typ.	44	dB
f = 650 MHz	$\|s_r\|^2$	typ.	41	dB
f = 860 MHz	$\|s_r\|^2$	typ.	43	dB

* This socket can be made available for customer reference purposes.
** Highest value, for a sample, occurring in the frequency range.

Output voltage				
at −60 dB intermodulation distortion				
(DIN45004, par. 6.3: 3-tone)				
f = 40–230 MHz	$V_{o(rms)}$	>	113	dBμV
		typ.	114	dBμV
f = 470 MHz	$V_{o(rms)}$	typ.	112	dBμV
f = 860 MHz	$V_{o(rms)}$	typ.	110	dBμV
Noise figure				
channel 2	F	typ.	7	dB
channel 65	F	typ.	9,8	dB

s-parameters: $s_f = s_{21}$ $s_i = s_{11}$
$s_r = s_{12}$ $s_o = s_{22}$

OPERATING CONDITIONS

Mounting-base temperature range	T_{mb}		−30 to +100	°C
D.C. supply voltage	V_B	=	24	V ± 10%
Frequency range	f		40 to 860	MHz
Source impedance and load impedance	R_s, R_ℓ	=	75	Ω

THERMAL DATA

a. The maximum permissible temperature at the mounting base is 100 °C.

b. When the mounting tab is screwed to a double-sided printed-circuit board with dimensions 37 mm x 51 mm, its temperature will be 57 °C above the temperature of the surrounding free air.

c. When a heatsink is fixed to the mounting tab and the pins are soldered into a double-sided printed-circuit board with dimensions 37 mm x 51 mm, the tab will reach the temperatures stated in the following table.

Notes:

1. When the device is fixed only to a heatsink, not to a printed-circuit board, the values of the second column of the table should be increased by 2 °C and those of the third column decreased by 2 °C.
2. The user is free to realize proper cooling by using differently shaped sinks, or, preferably, by fixing the tab to any convenient part of the equipment (e.g. a wall of the metal cabinet).

heatsink data thickness 1 mm	$T_{mb} - T_{amb}$ °C	$T_{amb\,max}$ °C
Bright aluminium heatsink		
L-shaped bar; length 100 mm, height 65 mm	27,5	72,5
Blackened aluminium heatsink		
L-shaped bar; length 50 mm, height 70 mm	26,5	73,5

MECHANICAL DATA

Dimensions in mm

The amplifier is resin coated and has a metal mounting tab at a right angle to the encapsulated part.

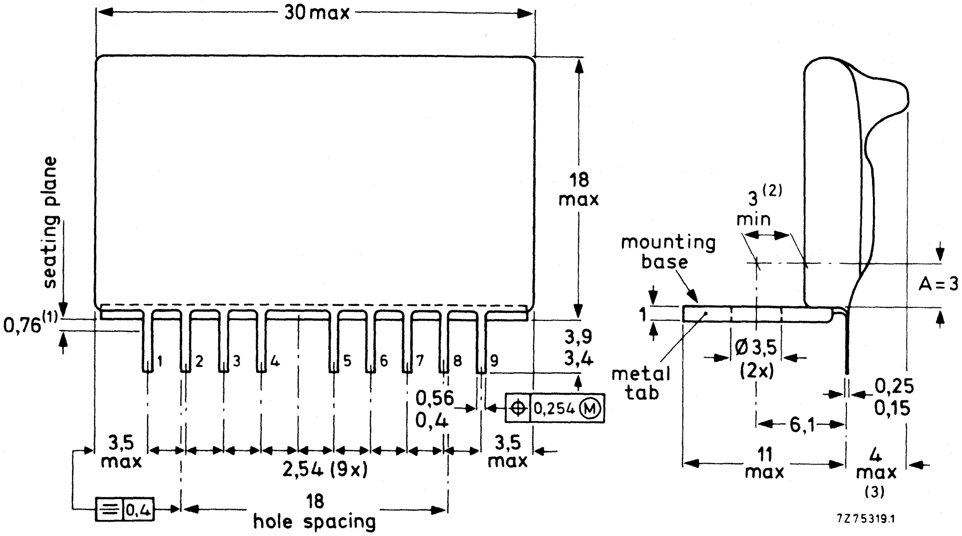

(1) Tolerance applies within this zone.
(2) Distance applies within zone A.
(3) For the OM337A: 3 mm maximum.

Fig. 2 Encapsulation.

Terminal connections

1 = Input
2, 3, 5, 6, 7, 8 = Common, connected to mounting tab
4 = Supply (+)
9 = Output

Soldering recommendations

Hand soldering

Maximum contact time for a soldering-iron temperature of 260 °C up to the seating plane is 5 s.

Dip or wave soldering

260 °C is the maximum permissible temperature of the solder; it must not be in contact with the joint for more than 5 seconds. The total contact time of successive solder waves must not exceed 5 seconds. The device may be mounted against the printed-circuit board, but the temperature of the device must not exceed 125 °C. If the printed-circuit board has been pre-heated, forced cooling may be necessary immediately after soldering to keep the temperature below the allowable limit.

Mounting recommendations

The module should preferably be mounted on a double-sided printed-circuit board, see the following example. An example is also given of heatsink mounting.
Input and output should be connected to 75 Ω tracks.
The connections to the common pins should be as close to the seating plane as possible.

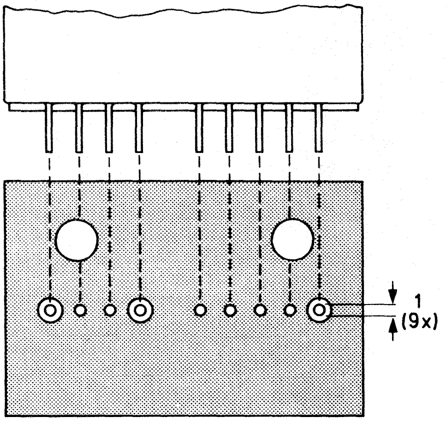

top view

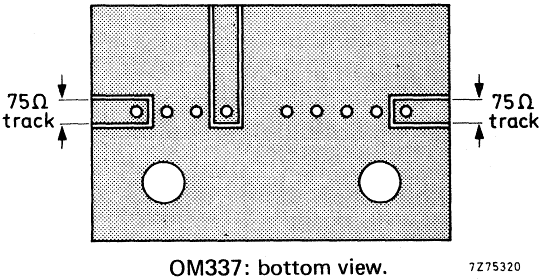

OM337: bottom view.

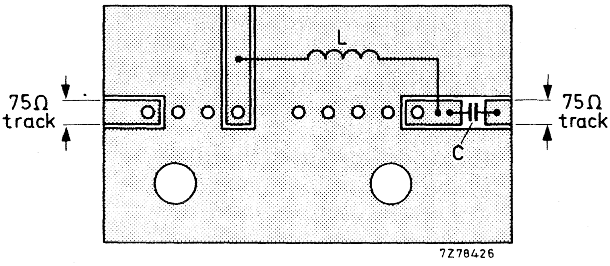

OM337A: bottom view.

Fig. 3 Printed-circuit board holes and tracks for the OM337 and OM337A.

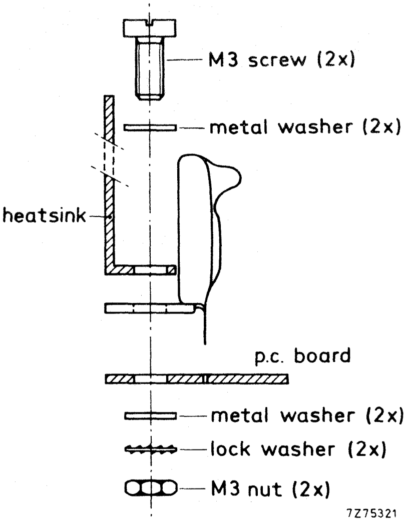

Fig. 4 Example of heatsink mounting.

L > 5 μH; e.g. catalogue no. 3122 108 20150 or 27 turns enamelled Cu wire (0,3 mm) wound on a ferrite core with a a diameter of 1,6 mm.
C > 220 pF ceramic capacitor.

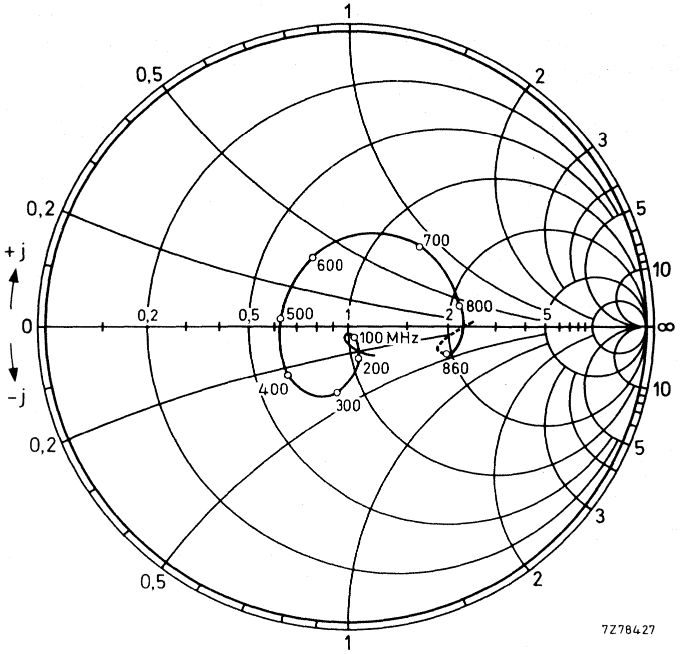

Fig. 5 Input impedance derived from input reflection coefficient s_i, co-ordinates in ohm x 75; typical values.

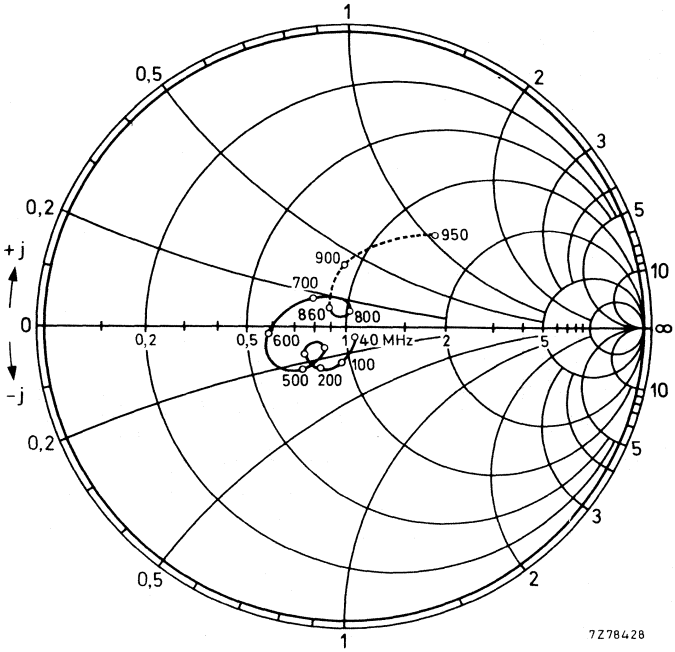

Fig. 6 Output impedance derived from output reflection coefficient s_o, co-ordinates in ohm x 75; typical values.

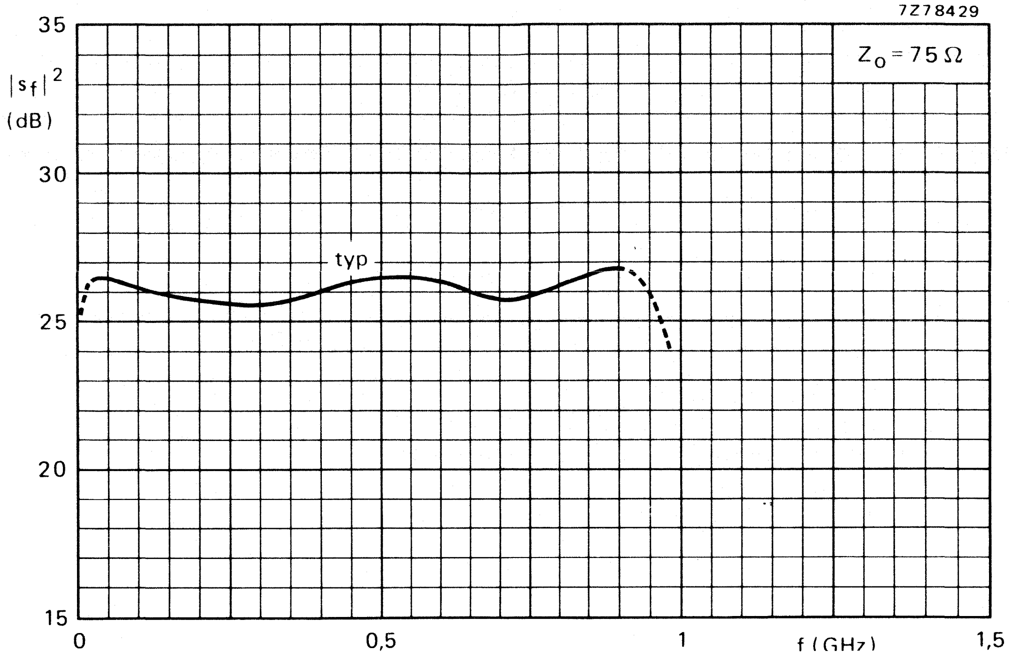

Fig. 7 Transducer gain as a function of frequency.

HYBRID INTEGRATED CIRCUIT VHF/UHF WIDE-BAND AMPLIFIER

Three-stage wide-band amplifier in the hybrid integrated circuit technique, designed for use in mast-head booster-amplifiers, as amplifier in MATV systems, and as general-purpose amplifier for v.h.f. and u.h.f. applications.

QUICK REFERENCE DATA

Frequency range	f		40 to 860	MHz
Source and load (characteristic) impedance	$R_s = R_\ell = Z_o$	=	75	Ω
Transducer gain	$G_{tr} = \lvert s_f \rvert^2$	typ.	28	dB
Flatness of frequency response	$\pm\Delta \lvert s_f \rvert^2$	typ.	1,5	dB
Output voltage at −60 dB intermodulation distortion (DIN 45004, 3-tone)	$V_{o(rms)}$	>	105	dBμV
Noise figure	F	typ.	6	dB
D.C. supply voltage	V_B	=	24	V ±10%
Operating ambient temperature	T_{amb}		−20 to +70	°C

ENCAPSULATION 7-pin, in-line, resin-coated body, see MECHANICAL DATA (Fig. 2)

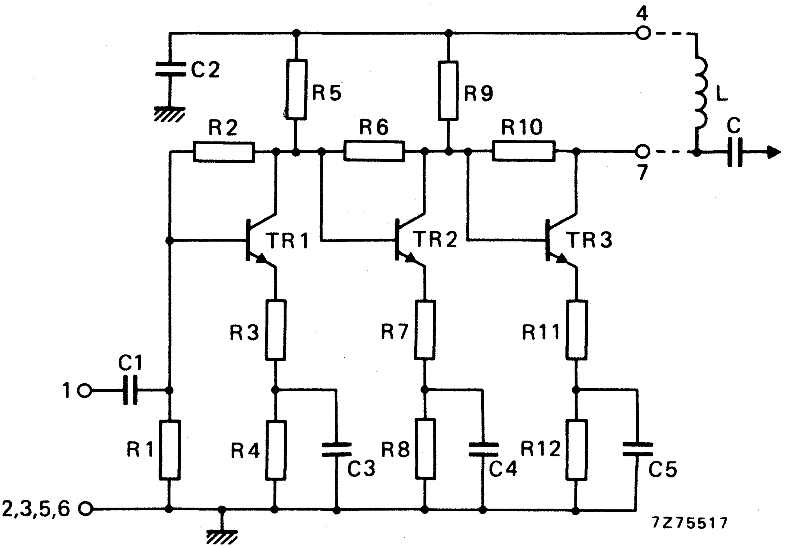

Fig. 1 Circuit diagram.

RATINGS

Limiting values in accordance with the Absolute Maximum System (IEC 134)

Operating ambient temperature	T_{amb}		−20 to +70	°C
Storage temperature	T_{stg}		−40 to +125	°C
D.C. supply voltage	V_B	max.	28	V
Peak voltages on pins 1 and 7	V_{1M}, V_{7M}	max.	28	V
	$-V_{1M}, -V_{7M}$	max.	10	V
Peak incident powers on pins 1 and 7	P_{I1M}, P_{I7M}	max.	100	mW

CHARACTERISTICS

Measuring conditions

V.H.F.-U.H.F. test socket	catalogue no. 3504 110 01840 *			
Ambient temperature	T_{amb}	=	25	°C
D.C. supply voltage	V_B	=	24	V
Source impedance and load impedance	R_s, R_ℓ	=	75	Ω
Characteristic impedance of h.f. connections	Z_o	=	75	Ω
Frequency range	f	=	40 to 860	MHz

Performance

Supply current	I_B	typ.	67	mA
Transducer gain	$G_{tr} = \|s_f\|^2$		25 to 30	dB
		typ.	28	dB
Flatness of frequency response	$\pm\Delta\|s_f\|^2$	typ.	1,5	dB
Individual maximum v.s.w.r.				
input	$VSWR_{(i)}$	typ.	1,5	**
output	$VSWR_{(o)}$	typ.	1,5	**
Back attenuation				
f = 100 MHz	$\|s_r\|^2$	typ.	46	dB
f = 860 MHz	$\|s_r\|^2$	typ.	31	dB
Output voltage at −60 dB intermodulation distortion (DIN 45004, par. 6.3: 3-tone)	$V_{o(rms)}$	>	105	dBμV
		typ.	107	dBμV
Noise figure	F	typ.	6	dB

s-parameters:	$s_f = s_{21}$	$s_i = s_{11}$
	$s_r = s_{12}$	$s_o = s_{22}$

---

* This socket can be made available for customer reference purposes.

** Highest value, for a sample, occurring in the frequency range.

OPERATING CONDITIONS

Ambient temperature range	T_{amb}	−20 to +70	°C
D.C. supply voltage	V_B	= 24	V ±10%
Frequency range	f	40 to 860	MHz
Source impedance and load impedance	R_s, R_ℓ	= 75	Ω

MECHANICAL DATA

Dimensions in mm

The device is resin coated.

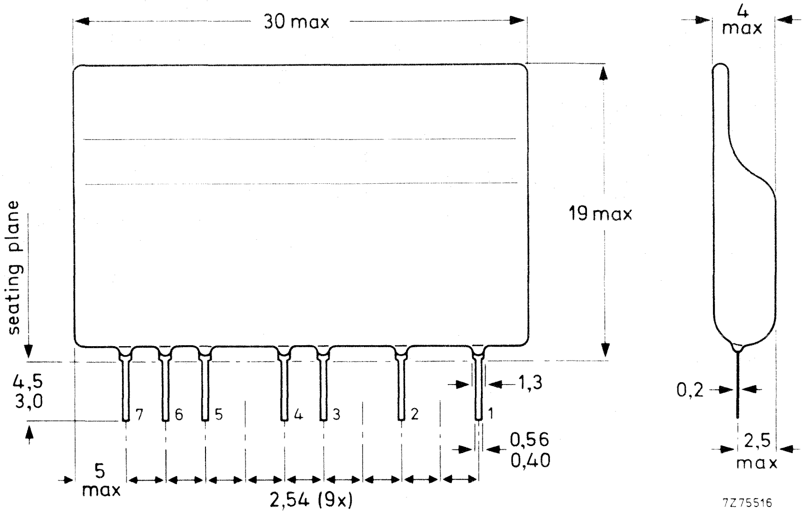

Fig. 2 Encapsulation.

Terminal connections

1 = input
2, 3, 5, 6 = common
4 = supply (+)
7 = output

Soldering recommendations

Hand soldering

Maximum contact time for a soldering-iron temperature of 260 °C up to the seating plane is 5 s.

Dip or wave soldering

260 °C is the maximum permissible temperature of the solder; it must not be in contact with the joint for more than 5 seconds. The total contact time of successive solder waves must not exceed 5 seconds. The device may be mounted against the printed-circuit board, but the temperature of the device must not exceed 125 °C. If the printed-circuit board has been pre-heated, forced cooling may be necessary immediately after soldering to keep the temperature below the allowable limit.

Mounting recommendations

The module should preferably be mounted on double-sided printed-circuit board, see the example shown below.

Input and output should be connected to 75 Ω tracks.

The connections to the 'common' pins should be as close to the seating plane as possible.

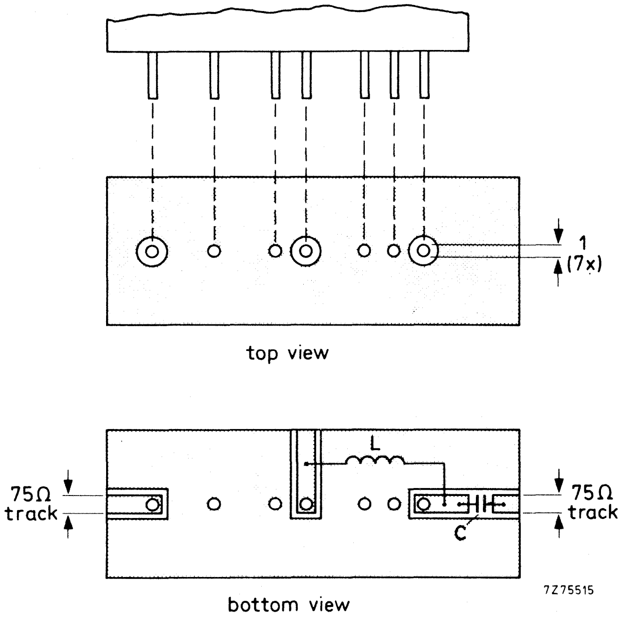

L > 5 μH; e.g. catalogue no. 3122 108 20150 or 27 turns enamelled Cu wire (0,3 mm) wound on a ferrite core with a diameter of 1,6 mm.
C > 220 pF ceramic capacitor.

Fig. 3 Printed-circuit board holes and tracks.

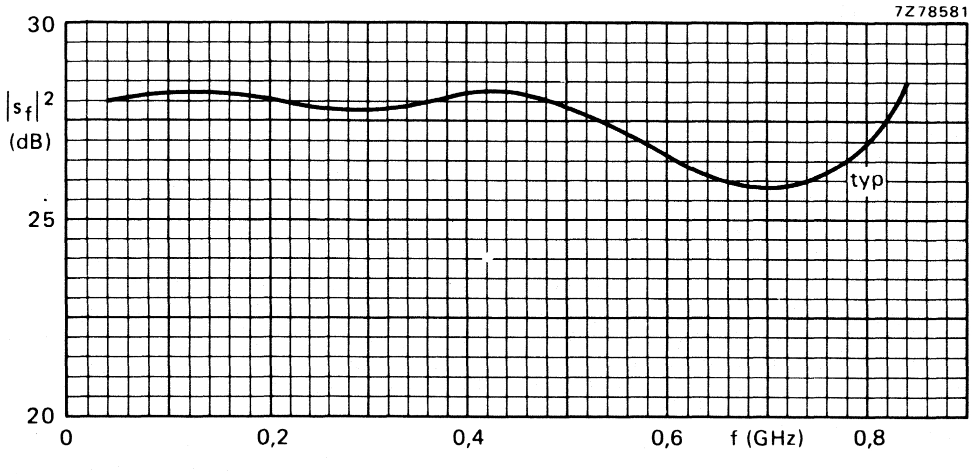

Fig. 4 Transducer gain as a function of frequency; Z_o = 75 Ω.

HYBRID INTEGRATED CIRCUIT VHF/UHF WIDE-BAND AMPLIFIER

One-stage wide-band amplifier in hybrid integrated circuit technique on a thin-film substrate, intended for aerial amplifiers in car radios, caravans or RATV and MATV applications.

QUICK REFERENCE DATA

D.C. supply voltage	V_B	=	12	V ± 10%
Frequency range	f		40 to 860	MHz
Source and load (characteristic) impedance	$R_s = R_\ell = Z_o$	=	75	Ω
Transducer gain	$G_{tr} = \|s_f\|^2$	typ.	12	dB
Flatness of frequency response	$\pm \Delta \|s_f\|^2$	typ.	1	dB
Output voltage at −60 dB intermodulation distortion (DIN 45004, 3-tone)	$V_{o(rms)}$	typ.	99	dBμV
Noise figure	F	typ.	5,5	dB
Operating ambient temperature	T_{amb}		−20 to + 70	°C

ENCAPSULATION 5-pin, in-line, resin-coated body, see MECHANICAL DATA (Fig. 2)

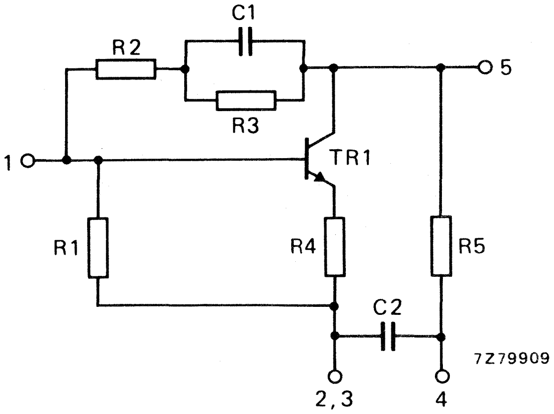

Fig. 1 Circuit diagram.

RATINGS

Limiting values in accordance with the Absolute Maximum System (IEC 134)

Operating ambient temperature	T_{amb}		−20 to +70	°C
Storage temperature	T_{stg}		−40 to +125	°C
D.C. supply voltage	V_B	max.	15	V
Peak incident powers on pins 1 and 5	P_{I1M}, P_{I5M}	max.	100	mW

CHARACTERISTICS

Measuring conditions

Ambient temperature	T_{amb}	=	25	°C
D.C. supply voltage	V_B	=	12	V
Source impedance and load impedance	R_s, R_ℓ	=	75	Ω
Characteristic impedance of h.f. connections	Z_o	=	75	Ω
Frequency range	f	=	40 to 860	MHz

Performance

Supply current	I_B	typ.	11,5	mA
Transducer gain	$G_{tr} = \lvert s_f \rvert^2$	typ.	12	dB
Flatness of frequency response	$\pm \Delta \lvert s_f \rvert^2$	typ.	1	dB
Individual maximum v.s.w.r.				
input	$VSWR_{(i)}$	typ.	2,0	*
output	$VSWR_{(o)}$	typ.	1,4	*
Back attenuation				
f = 100 MHz	$\lvert s_r \rvert^2$	typ.	22	dB
f = 860 MHz	$\lvert s_r \rvert^2$	typ.	19	dB
Output voltage at −60 dB intermodulation distortion (DIN 45004, par. 6.3: 3-tone)	$V_{o(rms)}$	typ.	99	dBμV
Noise figure	F	typ.	5,5	dB

s-parameters: $s_f = s_{21}$ $s_i = s_{11}$
$s_r = s_{12}$ $s_o = s_{22}$

---

* Highest value, for a sample, occuring in the frequency range.

OPERATING CONDITIONS

Ambient temperature range	T_{amb}		−20 to + 70	°C
D.C. supply voltage	V_B	=	12	V ±10%
Frequency range	f		40 to 860	MHz
Source impedance and load impedance	R_s, R_ℓ	=	75	Ω

MECHANICAL DATA

Dimensions in mm

The device is resin coated.

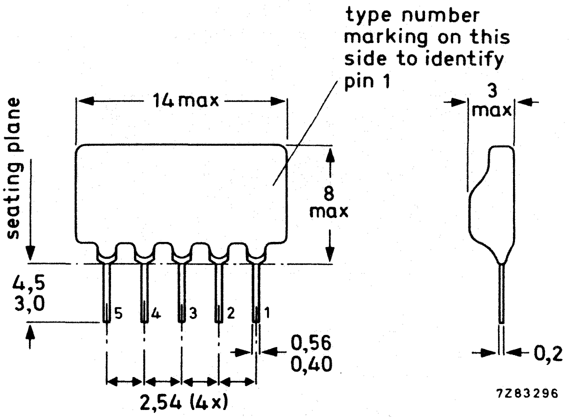

Fig. 2 Encapsulation.

Terminal connections

1 = input
2,3 = common
4 = supply (+)
5 = output

Soldering recommendations

Hand soldering

Maximum contact time for a soldering-iron temperature of 260 °C up to the seating plane is 5 s.

Dip or wave soldering

260 °C is the maximum permissible temperature of the solder; it must not be in contact with the joint for more than 5 seconds. The total contact time of successive solder waves must not exceed 5 seconds. The device may be mounted against the printed-circuit board, but the temperature of the device must not exceed 125 °C. If the printed-circuit board has been pre-heated, forced cooling may be necessary immediately after soldering to keep the temperature below the allowable limit.

Mounting recommendations

The module should preferably be mounted on double-sided printed-circuit board, see the example shown below.

Input and output should be connected to 75 Ω tracks.

The connections to the 'common' pins should be as close to the seating plane as possible.

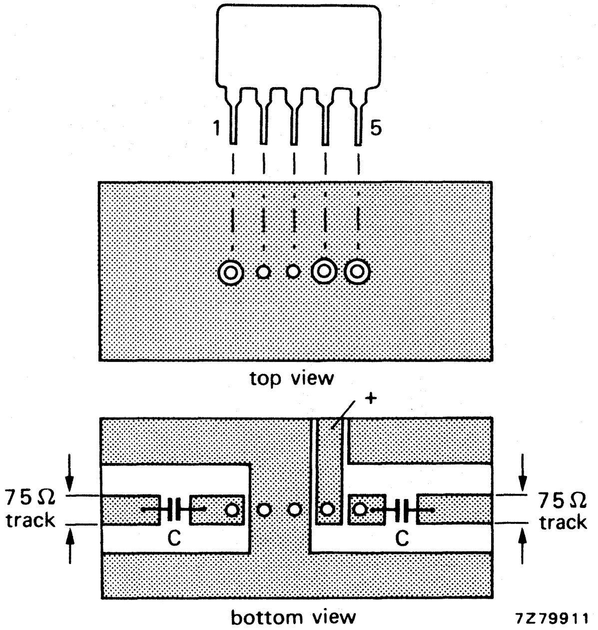

Fig. 3 Printed-circuit board holes and tracks.
$C > 220$ pF ceramic capacitor.

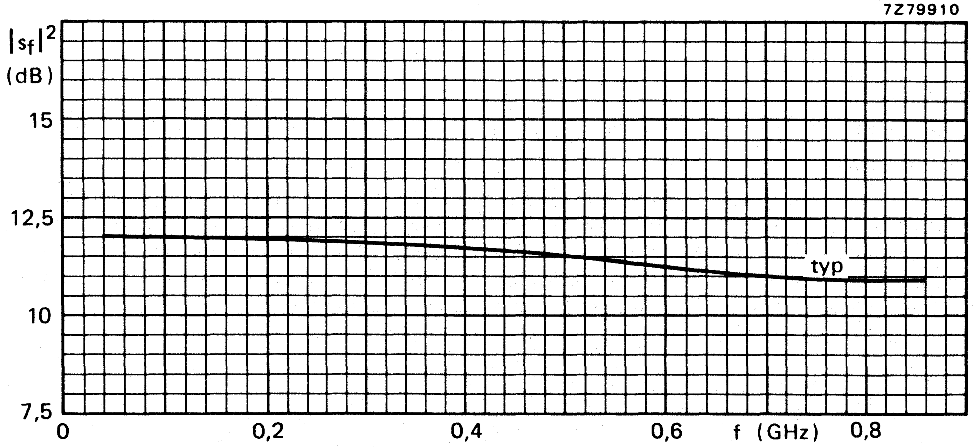

Fig. 4 Transducer gain as a function of frequency; $Z_C = 75\ \Omega$.

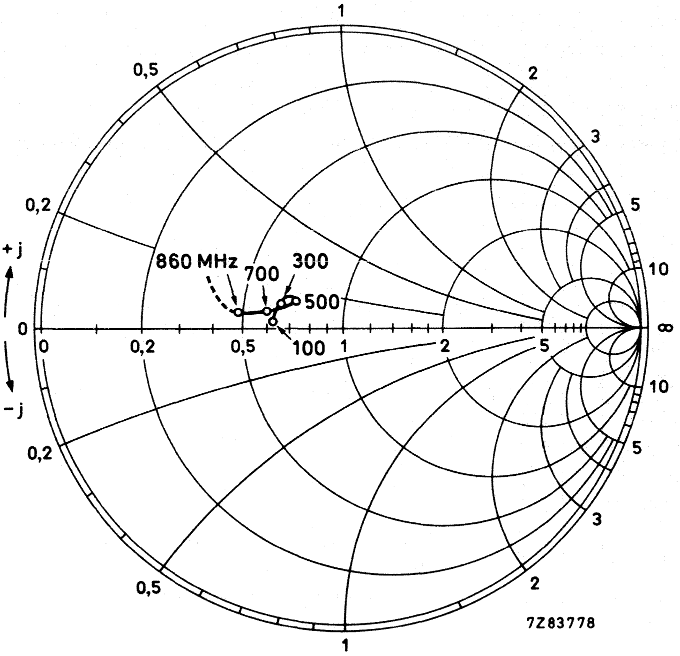

Fig. 5 Input impedance derived from input reflection coefficient s_i, co-ordinates in ohm x 75; typical values.

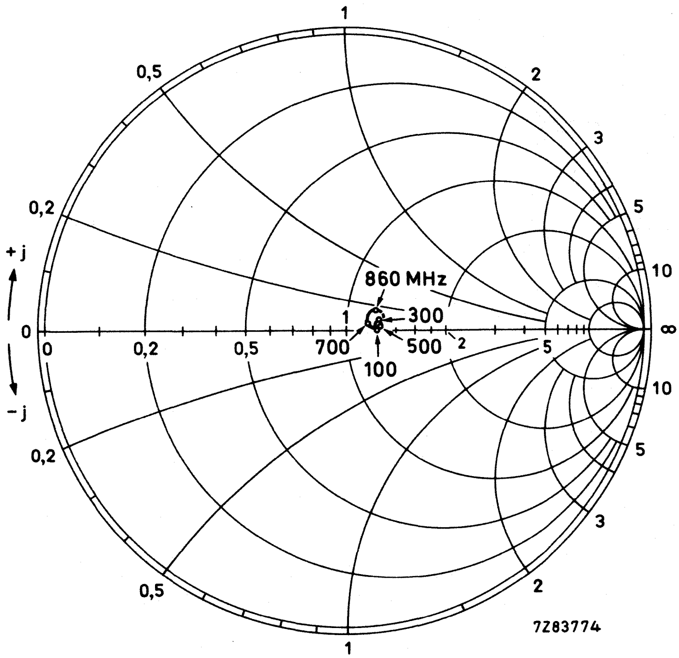

Fig. 6 Output impedance derived from output reflection coefficient s_o, co-ordinates in ohm x 75; typical values.

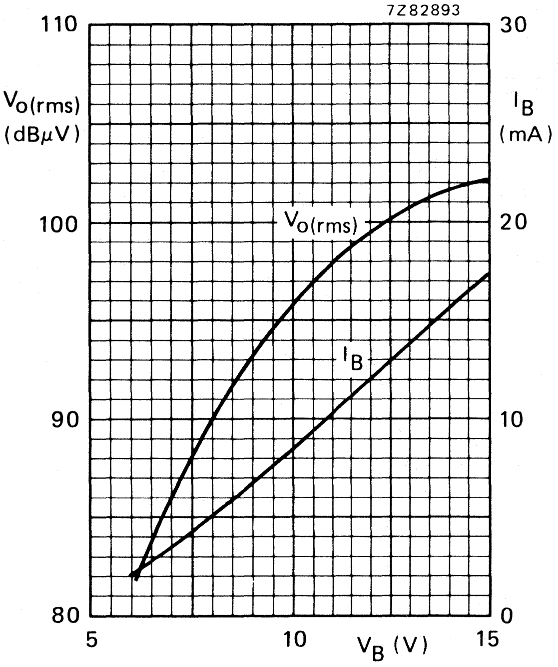

Fig. 7 Output voltage and supply current as a function of the supply voltage; typical values.

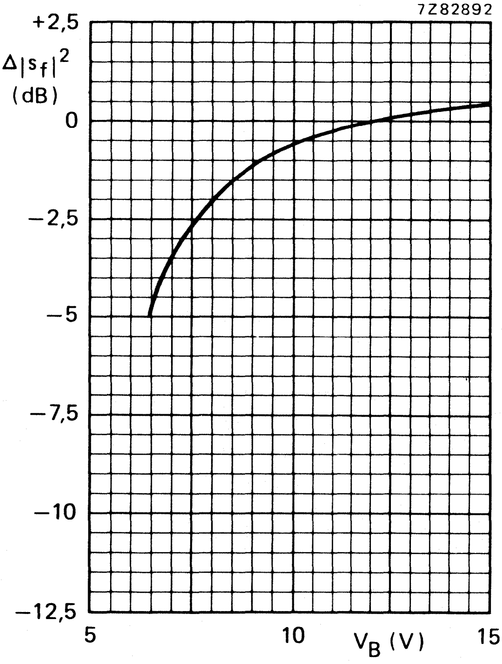

Fig. 8 Variation of transducer gain with supply voltage; reference 0 dB at 12 V; f = 100 to 860 MHz; typical values.

HYBRID INTEGRATED CIRCUIT VHF/UHF WIDE-BAND AMPLIFIER

Two-stage wide-band amplifier in hybrid integrated circuit technique on a thin-film substrate, intended for RATV and MATV applications.

QUICK REFERENCE DATA

D.C. supply voltage	V_B	=	12	V ± 10%
Frequency range	f		40 to 860	MHz
Source and load (characteristic) impedance	$R_s = R_\ell = Z_o$	=	75	Ω
Transducer gain	$G_{tr} = \|s_f\|^2$	typ.	18	dB
Flatness of frequency response	$\pm \Delta \|s_f\|^2$	typ.	1	dB
Output voltage at −60 dB intermodulation distortion (DIN 45004, 3-tone)	$V_{o(rms)}$	typ.	100	dBμV
Noise figure	F	typ.	6	dB
Operating ambient temperature	T_{amb}		−20 to +70	°C

ENCAPSULATION 5-pin, in-line, resin-coated body, see MECHANICAL DATA (Fig. 2)

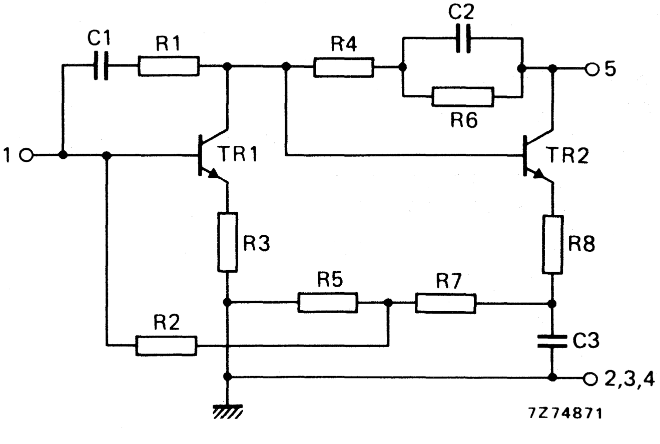

Fig. 1 Circuit diagram.

RATINGS

Limiting values in accordance with the Absolute Maximum System (IEC 134)

Operating ambient temperature	T_{amb}	−20 to + 70	°C
Storage temperature	T_{stg}	−40 to + 125	°C
D.C. supply voltage	V_B	max. 15	V
Peak incident powers on pins 1 and 5	P_{I1M}, P_{I5M}	max. 100	mW

CHARACTERISTICS

Measuring conditions

Ambient temperature	T_{amb}	= 25	°C
D.C. supply voltage	V_B	= 12	V
Source impedance and load impedance	R_s, R_ℓ	= 75	Ω
Characteristic impedance of h.f. connections	Z_o	= 75	Ω
Frequency range	f	= 40 to 860	MHz

Performance

Supply current	I_B	typ.	18	mA
Transducer gain	$G_{tr} = \|s_f\|^2$	typ.	18	dB
Flatness of frequency response	$\pm \Delta \|s_f\|^2$	typ.	1	dB
Individual maximum v.s.w.r.				
input	$VSWR_{(i)}$	typ.	1,5	*
output	$VSWR_{(o)}$	typ.	1,9	*
Back attenuation				
f = 100 MHz	$\|s_r\|^2$	typ.	29	dB
f = 860 MHz	$\|s_r\|^2$	typ.	25	dB
Output voltage at −60 dB intermodulation distortion (DIN 45004, par. 6.3: 3-tone)	$V_{o(rms)}$	typ.	100	dBμV
Noise figure	F	typ.	6	dB

s-parameters: $s_f = s_{21}$ $s_i = s_{11}$
$s_r = s_{12}$ $s_o = s_{22}$

---

* Highest value, for a sample, occuring in the frequency range.

OPERATING CONDITIONS

Ambient temperature range	T_{amb}	−20 to + 70	°C
D.C. supply voltage	V_B	= 12	V ± 10%
Frequency range	f	40 to 860	MHz
Source impedance and load impedance	R_s, R_ℓ	= 75	Ω

MECHANICAL DATA

Dimensions in mm

The device is resin coated.

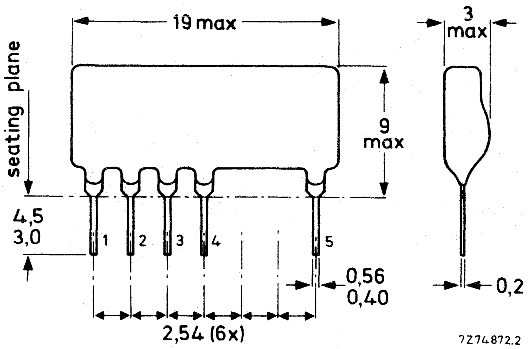

Fig. 2 Encapsulation.

Terminal connections

1 = input
2,3,4 = common
5 = output/supply(+)

Soldering recommendations

Hand soldering

Maximum contact time for a soldering-iron temperature of 260 °C up to the seating plane is 5 s.

Dip or wave soldering

260 °C is the maximum permissible temperature of the solder; it must not be in contact with the joint for more than 5 seconds. The total contact time of successive solder waves must not exceed 5 seconds. The device may be mounted against the printed-circuit board, but the temperature of the device must not exceed 125 °C. If the printed-circuit board has been pre-heated, forced cooling may be necessary immediately after soldering to keep the temperature below the allowable limit.

Mounting recommendations

The module should preferably be mounted on double-sided printed-circuit board, see the example shown below.

Input and output should be connected to 75 Ω tracks.

The connections to the 'common' pins should be as close to the seating plane as possible.

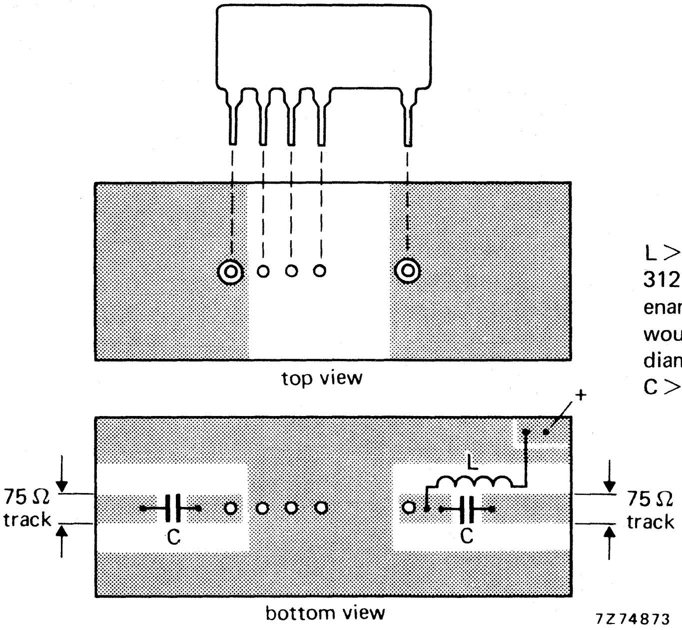

L > 5 μH; e.g. catalogue no. 3122 108 20150 or 27 turns enamelled Cu wire (0,3 mm) wound on a ferrite core with a diameter of 1,6 mm.
C > 220 pF ceramic capacitor.

Fig. 3 Printed-circuit board holes and tracks.

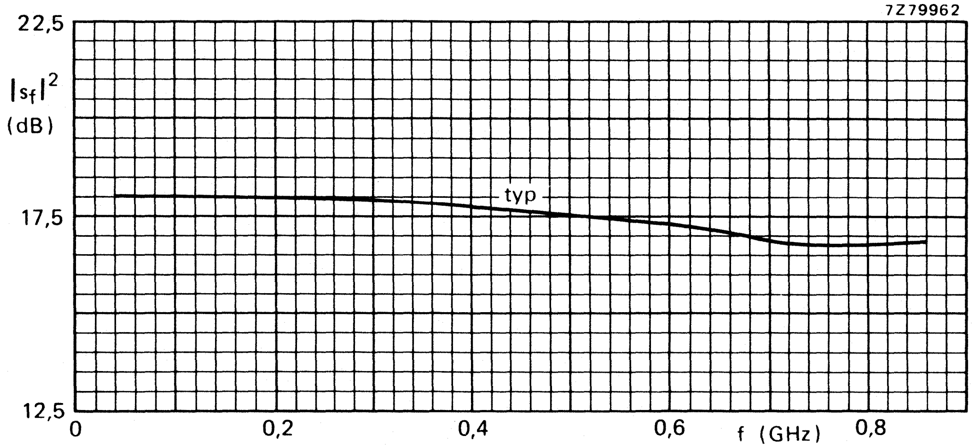

Fig. 4 Transducer gain as a function of frequency; $Z_o = 75\ \Omega$.

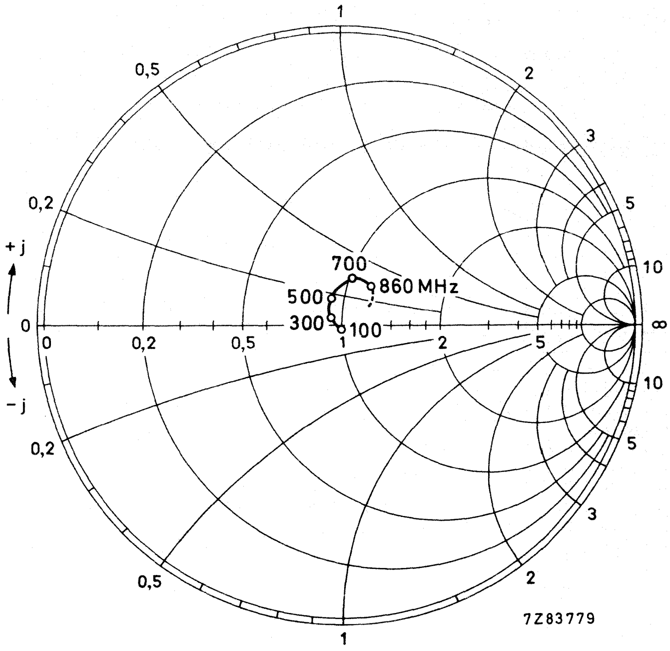

Fig. 5 Input impedance derived from input reflection coefficient s_i, co-ordinates in ohm x 75; typical values.

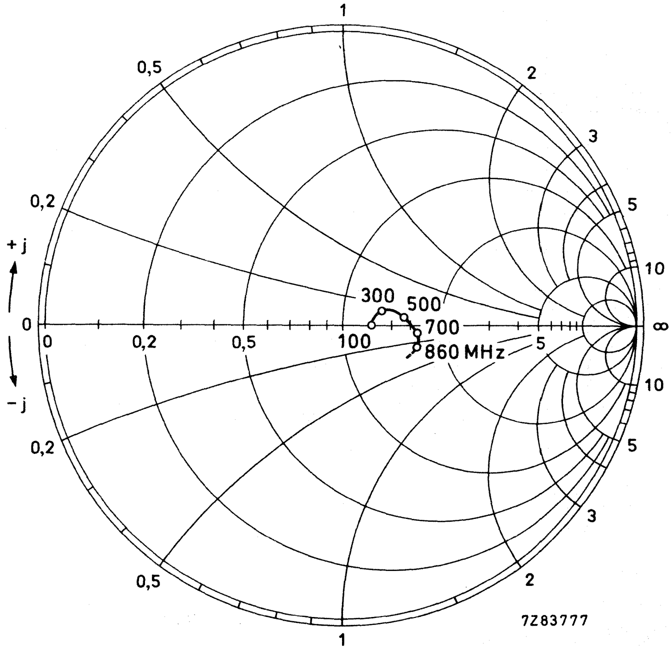

Fig. 6 Output impedance derived from output reflection coefficient s_o, co-ordinates in ohm x 75; typical values.

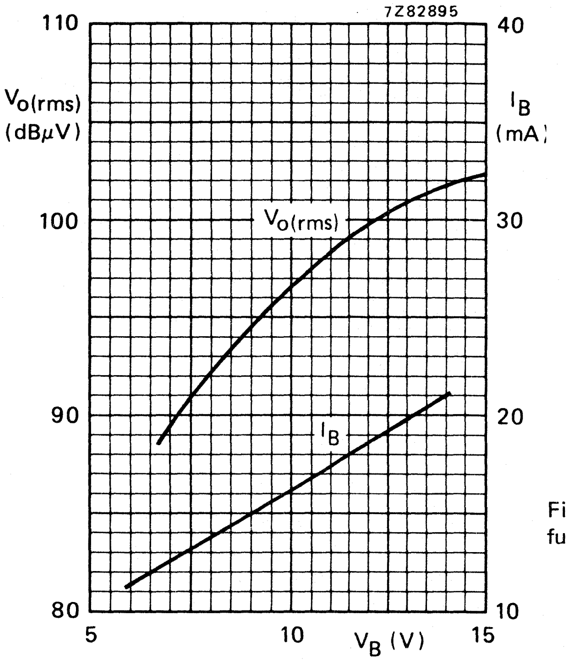

Fig. 7 Output voltage and supply current as a function of the supply voltage; typical values.

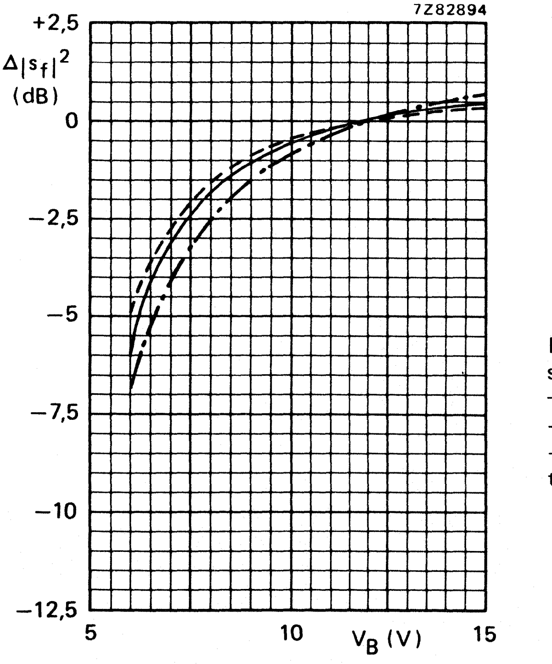

Fig. 8 Variation of transducer gain with supply voltage; reference 0 dB at 12 V:
——— f = 500 MHz;
– – – – f = 100 MHz;
—·—·—· f = 860 MHz;
typical values.

HYBRID INTEGRATED CIRCUIT VHF/UHF WIDE-BAND AMPLIFIER

Three-stage wide-band amplifier in hybrid integrated circuit technique on a thin-film substrate, intended for use in mast-head booster-amplifiers, as preamplifier in MATV systems, and as general-purpose amplifier for v.h.f. and u.h.f. applications.

QUICK REFERENCE DATA

Frequency range	f		40 to 860	MHz
Source and load (characteristic) impedance	$R_s = R_\ell = Z_o$	=	75	Ω
Transducer gain	$G_{tr} = \lvert s_f \rvert^2$	typ.	23	dB
Flatness of frequency response	$\pm\Delta\lvert s_f \rvert^2$	typ.	0,5	dB
Output voltage at −60 dB intermodulation distortion (DIN 45004, 3-tone)	$V_{o(rms)}$	>	105	dBμV
Noise figure	F	typ.	7	dB
D.C. supply voltage	V_B	=	12	V ± 10%
Operating ambient temperature	T_{amb}		−20 to +70	°C

ENCAPSULATION 8-pin, in-line, resin-coated body, see MECHANICAL DATA (Fig. 2)

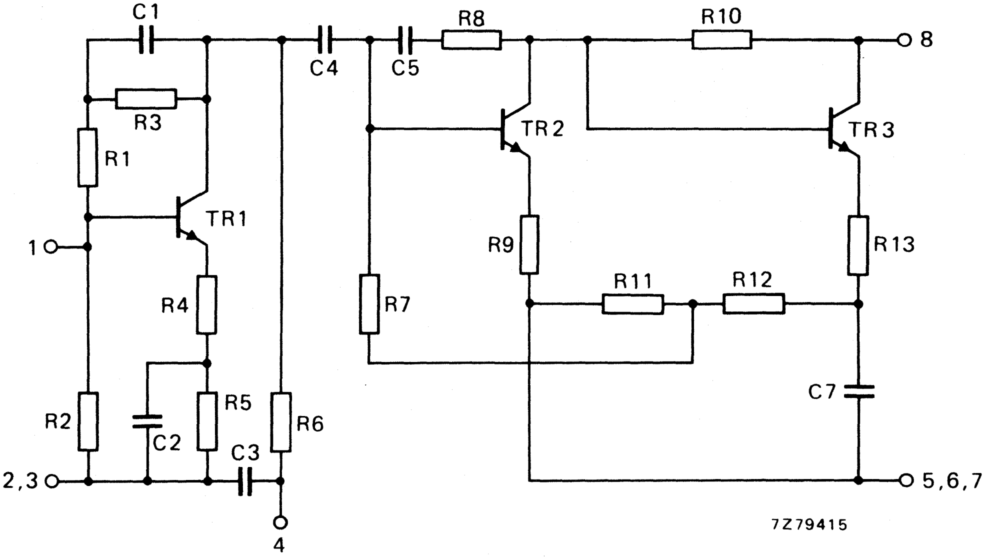

Fig. 1 Circuit diagram.

RATINGS

Limiting values in accordance with the Absolute Maximum System (IEC 134)

Operating ambient temperature	T_{amb}		−20 to +70	°C
Storage temperature	T_{stg}		−40 to +125	°C
D.C. supply voltage	V_B	max.	15	V
Peak incident powers on pins 1 and 7	P_{I1M}, P_{I7M}	max.	100	mW

CHARACTERISTICS

Measuring conditions

Ambient temperature	T_{amb}	=	25	°C
D.C. supply voltage	V_B	=	12	V
Source impedance and load impedance	R_s, R_ℓ	=	75	Ω
Characteristic impedance of h.f. connections	Z_o	=	75	Ω
Frequency range	f	=	40 to 860	MHz

Performance

Supply current	I_B	typ.	55	mA
Transducer gain	$G_{tr} = \|s_f\|^2$	typ.	23	dB
			21 to 25	dB
Flatness of frequency response	$\pm\Delta\|s_f\|^2$	typ.	0,5	dB
Individual maximum v.s.w.r.				
input	$VSWR_{(i)}$	typ.	1,3	*
output	$VSWR_{(o)}$	typ.	1,5	*
Back attenuation				
f = 100 MHz	$\|s_r\|^2$	typ.	42	dB
f = 860 MHz	$\|s_r\|^2$	typ.	33	dB
Output voltage at −60 dB intermodulation distortion (DIN 45004, par. 6.3: 3-tone)	$V_{o(rms)}$	>	105	dBμV
		typ.	107	dBμV
Noise figure	F	typ.	7	dB

s-parameters:	$s_f = s_{21}$	$s_i = s_{11}$
	$s_r = s_{12}$	$s_o = s_{22}$

---

* Highest value, for a sample, occurring in the frequency range.

OPERATING CONDITIONS

Ambient temperature range	T_{amb}		−20 to +70 °C
D.C. supply voltage	V_B	=	12 V ± 10%
Frequency range	f		40 to 860 MHz
Source impedance and load impedance	R_s, R_ℓ	=	75 Ω

MECHANICAL DATA

Dimensions in mm

The device is resin coated.

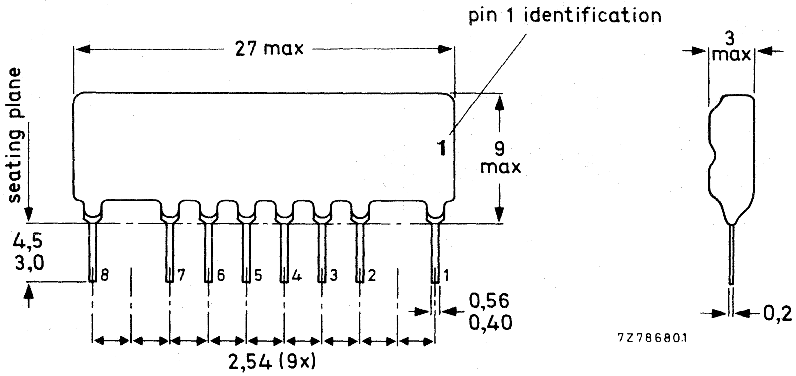

Fig. 2 Encapsulation.

Terminal connections

1 = input
2, 3, 5, 6, 7 = common
4 = supply (+)
8 = output/supply (+)

Soldering recommendations

Hand soldering

Maximum contact time for a soldering-iron temperature of 260 °C up to the seating plane is 5 s.

Dip or wave soldering

260 °C is the maximum permissible temperature of the solder; it must not be in contact with the joint for more than 5 seconds. The total contact time of successive solder waves must not exceed 5 seconds. The device may be mounted against the printed-circuit board, but the temperature of the device must not exceed 125 °C. If the printed-circuit board has been pre-heated, forced cooling may be necessary immediately after soldering to keep the temperature below the allowable limit.

Mounting recommendations

The module should preferably be mounted on double-sided printed-circuit board, see the example shown below.

Input and output should be connected to 75 Ω tracks.

The connections to the 'common' pins should be as close to the seating plane as possible.

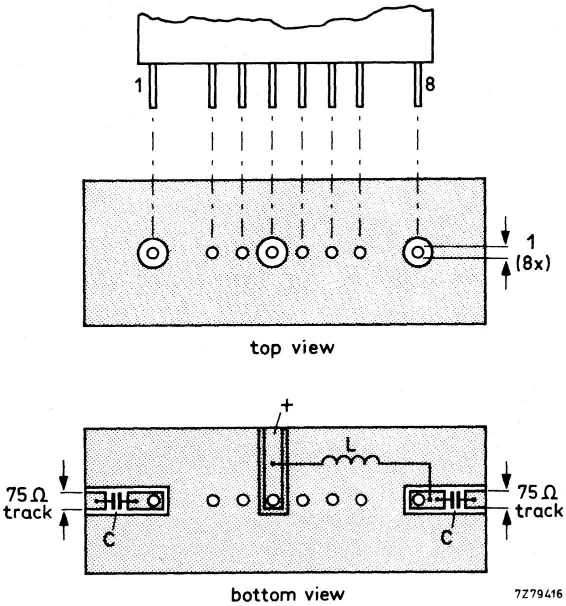

L > 5 μH; e.g. catalogue no. 3122 108 20150 or 27 turns enamelled Cu wire (0,3 mm) wound on a ferrite core with a diameter of 1,6 mm.
C > 220 pF ceramic capacitor.

Fig. 3 Printed-circuit board holes and tracks.

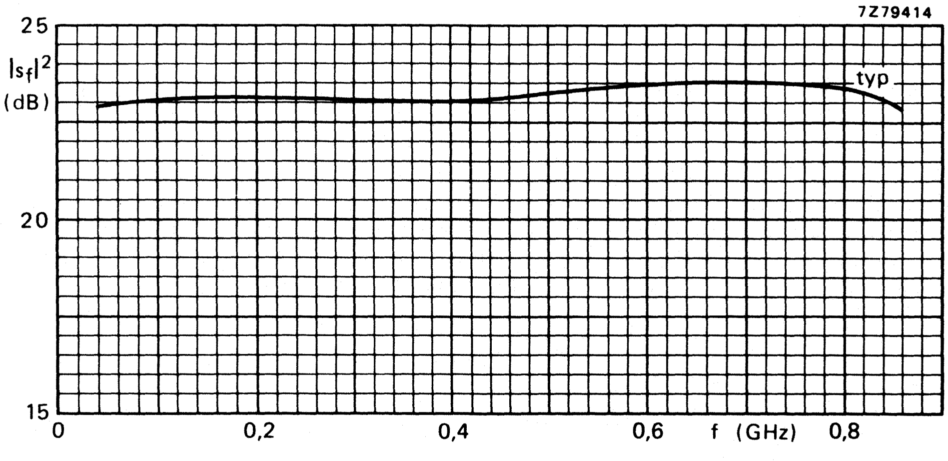

Fig. 4 Transducer gain as a function of frequency; Z_o = 75 Ω.

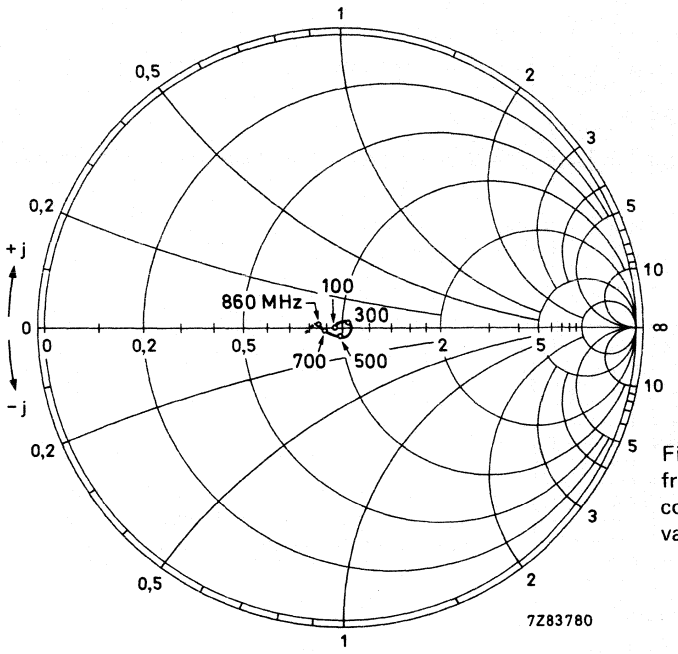

Fig. 5 Input impedance derived from input reflection coefficient s_i, co-ordinates in ohm x 75; typical values.

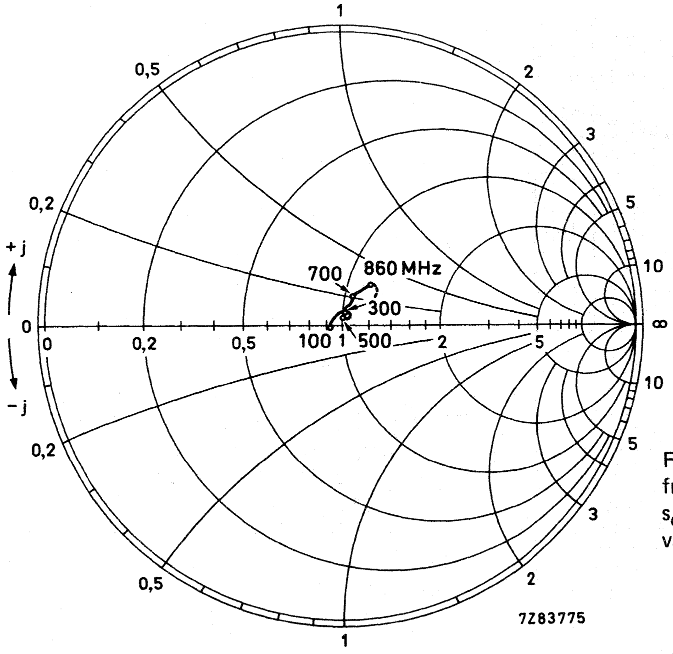

Fig. 6 Output impedance derived from output reflection coefficient s_o, co-ordinates in ohm x 75; typical values.

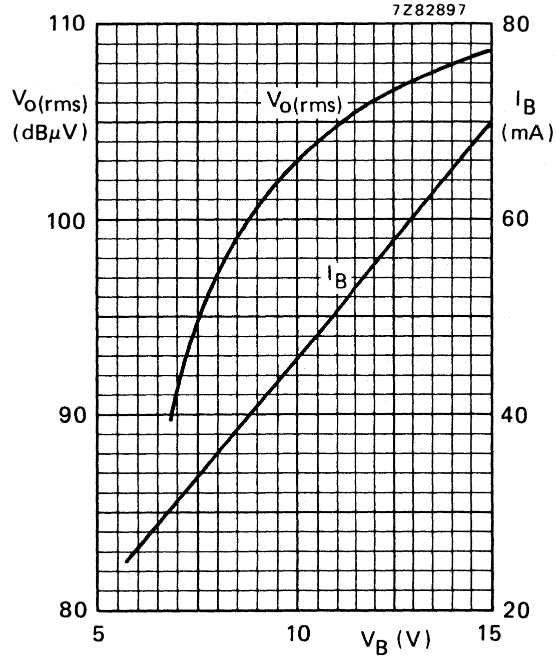

Fig. 7 Output voltage and supply current as a function of the supply voltage; typical values.

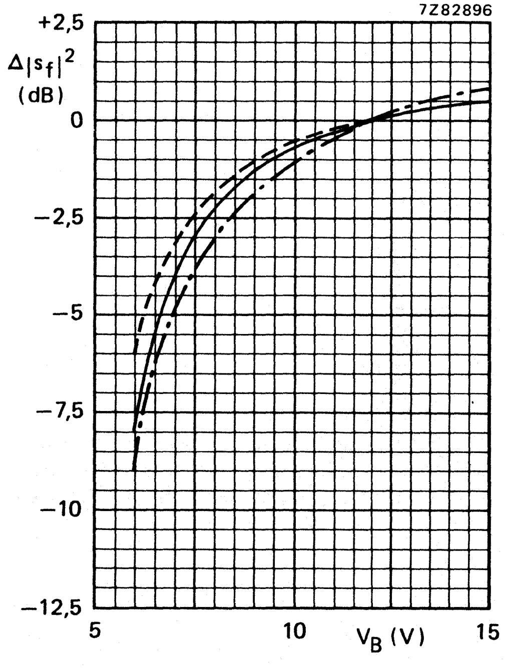

Fig. 8 Variation of transducer gain with supply voltage; reference 0 dB at 12 V;
——— f = 500 MHz;
– – – – f = 100 MHz;
–·–·– f = 860 MHz;
typical values.

HYBRID INTEGRATED CIRCUIT VHF/UHF WIDE-BAND AMPLIFIER

Three-stage wide-band amplifier in hybrid integrated circuit technique on a thin-film substrate, intended for use in mast-head booster-amplifiers, as an amplifier in MATV systems, and as general-purpose amplifier for v.h.f. and u.h.f. applications.

QUICK REFERENCE DATA

Frequency range	f		40 to 860	MHz
Source and load (characteristic) impedance	$R_s = R_\ell = Z_o$	=	75	Ω
Transducer gain	$G_{tr} = \lvert s_f \rvert^2$	typ.	28	dB
Flatness of frequency response	$\pm\Delta\lvert s_f \rvert^2$	typ.	1	dB
Output voltage at −60 dB intermodulation distortion (DIN 45004, 3-tone)	$V_{o(rms)}$	>	105	dBμV
Noise figure	F	typ.	6	dB
D.C. supply voltage	V_B	=	12	V ± 10%
Operating ambient temperature	T_{amb}		−20 to +70	°C

ENCAPSULATION 8-pin, in-line, resin-coated body, see MECHANICAL DATA (Fig. 2)

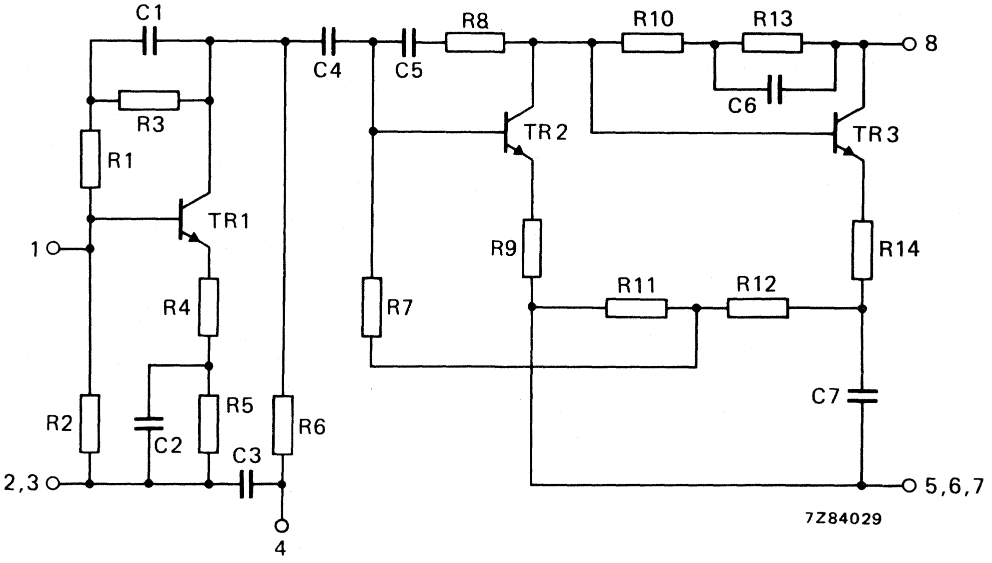

Fig. 1 Circuit diagram.

RATINGS

Limiting values in accordance with the Absolute Maximum System (IEC 134)

Operating ambient temperature	T_{amb}		−20 to +70	°C
Storage temperature	T_{stg}		−40 to +125	°C
D.C. supply voltage	V_B	max.	15	V
Peak incident powers on pins 1 and 8	P_{I1M}, P_{I8M}	max.	100	mW

CHARACTERISTICS

Measuring conditions

Ambient temperature	T_{amb}	=	25	°C
D.C. supply voltage	V_B	=	12	V
Source impedance and load impedance	R_s, R_ℓ	=	75	Ω
Characteristic impedance of h.f. connections	Z_o	=	75	Ω
Frequency range	f	=	40 to 860	MHz

Performance

Supply current	I_B	typ.	50	mA
Transducer gain	$G_{tr} = \|s_f\|^2$	typ.	28	dB
			26 to 31	dB
Flatness of frequency response	$\pm\Delta\|s_f\|^2$	typ.	1	dB
Individual maximum v.s.w.r.				
input	$VSWR_{(i)}$	typ.	1,5	*
output	$VSWR_{(o)}$	typ.	1,7	*
Back attenuation				
f = 100 MHz	$\|s_r\|^2$	typ.	45	dB
f = 860 MHz	$\|s_r\|^2$	typ.	35	dB
Output voltage at −60 dB intermodulation distortion (DIN 45004, par. 6,3; 3-tone)	$V_{o(rms)}$	>	105	dBμV
		typ.	107	dBμV
Noise figure	F	typ.	6	dB

s-parameters: $s_f = s_{21}$ $s_i = s_{11}$
$s_r = s_{12}$ $s_o = s_{22}$

---

* Highest value, for a sample, occurring in the frequency range.

OPERATING CONDITIONS

Ambient temperature range	T_{amb}		−20 to +70	°C
D.C. supply voltage	V_B	=	12	V ± 10%
Frequency range	f		40 to 860	MHz
Source impedance and load impedance	R_s, R_ℓ	=	75	Ω

MECHANICAL DATA

Dimensions in mm

The device is resin coated.

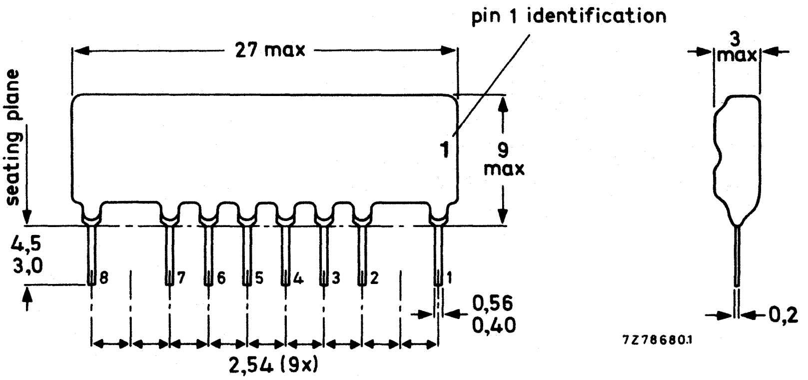

Fig. 2 Encapsulation.

Terminal connections

1 = input
2, 3, 5, 6, 7 = common
4 = supply (+)
8 = output/supply (+)

Soldering recommendations

Hand soldering

Maximum contact time for a soldering-iron temperature of 260 °C up to the seating plane is 5 s.

Dip or wave soldering

260 °C is the maximum permissible temperature of the solder; it must not be in contact with the joint for more than 5 seconds. The total contact time of successive solder waves must not exceed 5 seconds. The device may be mounted against the printed-circuit board, but the temperature of the device must not exceed 125 °C. If the printed-circuit board has been pre-heated, forced cooling may be necessary immediately after soldering to keep the temperature below the allowable limit.

Mounting recommendations

The module should preferably be mounted on double-sided printed-circuit board, see the example shown below.

Input and output should be connected to 75 Ω tracks.

The connections to the 'common' pins should be as close to the seating plane as possible.

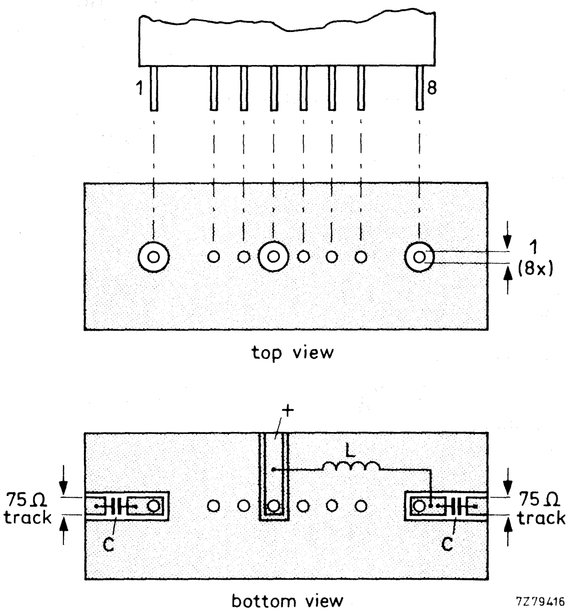

L > 5 μH; e.g. catalogue no. 3122 108 20150 or 27 turns enamelled Cu wire (0,3 mm) wound on a ferrite core (material 4B1; catalogue number 3122 104 91110) with a diameter of 1,6 mm.
C > 220 pF ceramic capacitor.

Fig. 3 Printed-circuit board holes and tracks.

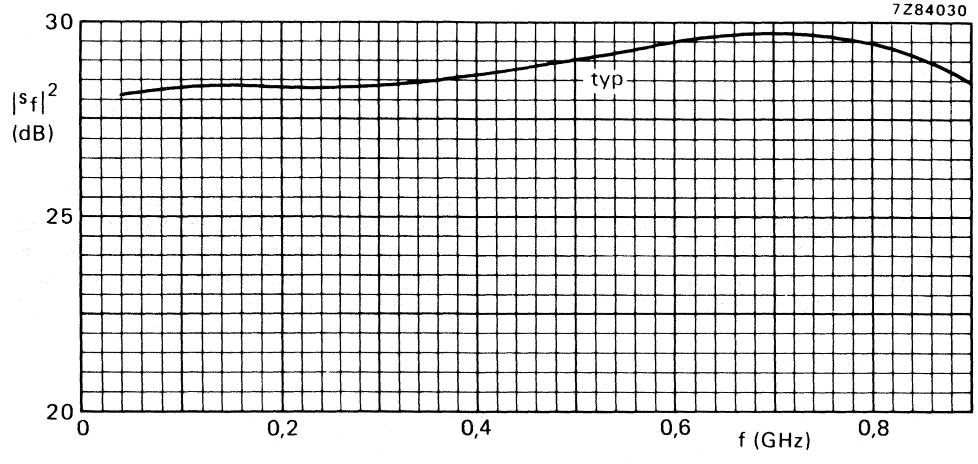

Fig. 4 Transducer gain as a function of frequency; Z_o = 75 Ω.

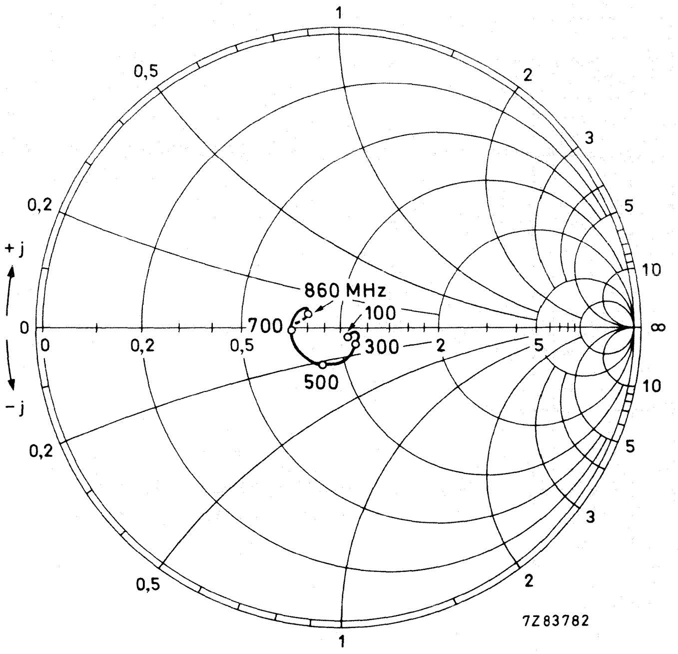

Fig. 5 Input impedance derived from input reflection coefficient s_i, co-ordinates in ohm x 75; typical values.

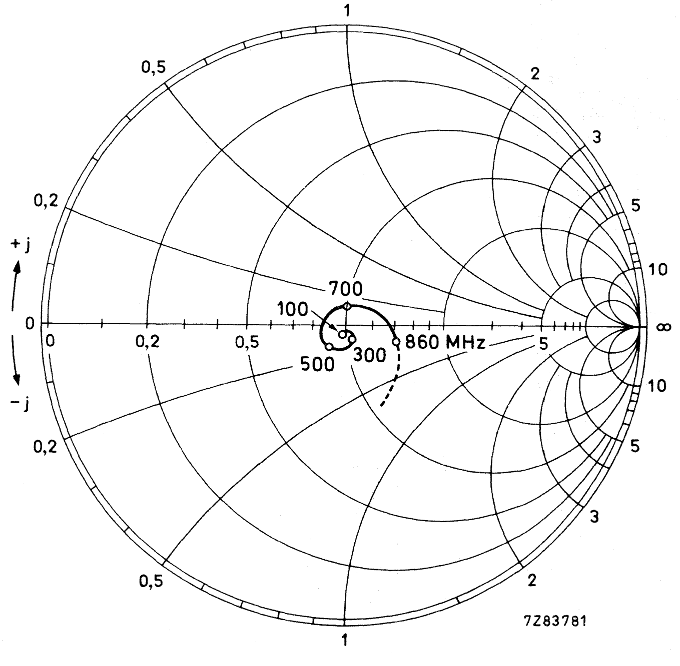

Fig. 6 Output impedance derived from output reflection coefficient s_o, co-ordinates in ohm x 75; typical values.

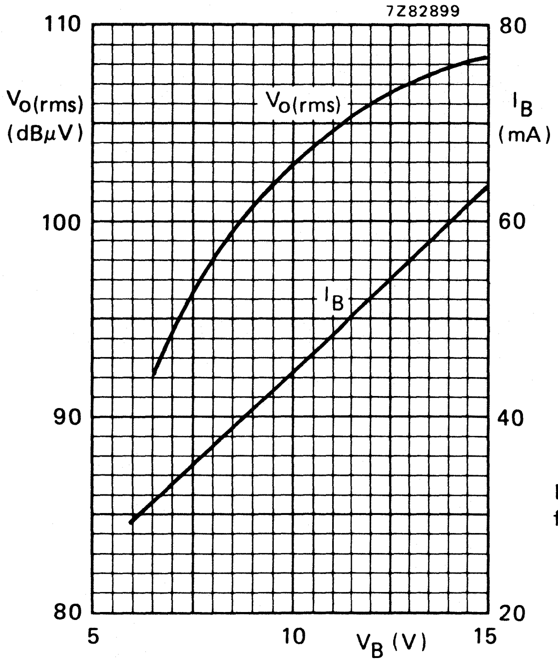

Fig. 7 Output voltage and supply current as a function of the supply voltage; typical values.

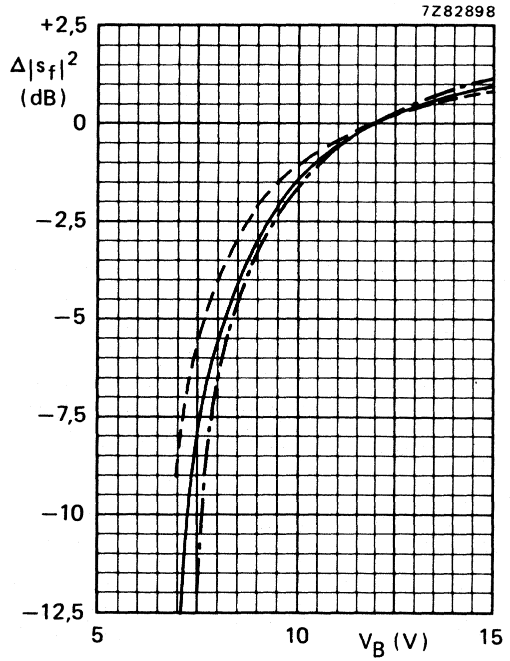

Fig. 8 Variation of transducer gain with supply voltage; reference 0 dB at 12 V;
——— f = 500 MHz;
– – – – f = 100 MHz;
—·—·—· f = 860 MHz;
typical values.

HYBRID INTEGRATED CIRCUIT VHF/UHF WIDE-BAND AMPLIFIER

Three-stage wide-band amplifier in hybrid integrated circuit technique on a thin-film substrate, intended for use in mast-head booster-amplifiers, as an amplifier in MATV and CATV systems, and as general-purpose amplifier for v.h.f. and u.h.f. applications.

QUICK REFERENCE DATA

Frequency range	f		40 to 860	MHz
Source and load (characteristic) impedance	$R_s = R_\ell = Z_o$	=	75	Ω
Transducer gain	$G_{tr} = \lvert s_f \rvert^2$	typ.	28	dB
Flatness of frequency response	$\pm\Delta\lvert s_f \rvert^2$	typ.	1	dB
Output voltage at −60 dB intermodulation distortion (DIN 45004, 3-tone)				
VHF	$V_{o(rms)}$	typ.	113	dBμV
UHF	$V_{o(rms)}$	typ.	112	dBμV
Noise figure	F	typ.	7	dB
D.C. supply voltage	V_B	=	12	V ± 10%
Operating ambient temperature	T_{amb}		−20 to +70	°C

ENCAPSULATION 9-pin, in-line, resin-coated body, see MECHANICAL DATA (Fig.2)

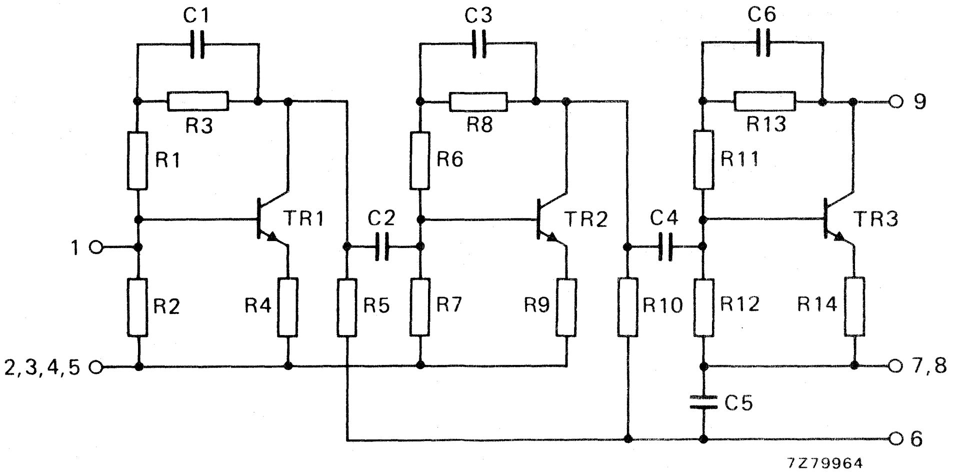

Fig. 1 Circuit diagram.

RATINGS

Limiting values in accordance with the Absolute Maximum System (IEC 134)

Operating ambient temperature	T_{amb}		–20 to +70	°C
Storage temperature	T_{stg}		–40 to +125	°C
D.C. supply voltage	V_B	max.	15	V
Peak incident powers on pins 1 and 8	P_{I1M}, P_{I8M}	max.	100	mW

CHARACTERISTICS

Measuring conditions

Ambient temperature	T_{amb}	=	25	°C
D.C. supply voltage	V_B	=	12	V
Source impedance and load impedance	R_s, R_ℓ	=	75	Ω
Characteristic impedance of h.f. connections	Z_o	=	75	Ω
Frequency range	f	=	40 to 860	MHz

Performance

Supply current	I_B	typ.	105	mA
Transducer gain	$G_{tr} = \|s_f\|^2$	typ.	28 26 to 31	dB dB
Flatness of frequency response	$\pm\Delta\|s_f\|^2$	typ.	1	dB
Individual maximum v.s.w.r.				
input	$VSWR_{(i)}$	typ.	2,3	*
output	$VSWR_{(o)}$	typ.	1,9	*
Back attenuation				
f = 100 MHz	$\|s_r\|^2$	typ.	45	dB
f = 860 MHz	$\|s_r\|^2$	typ.	35	dB
Output voltage at –60 dB intermodulation distortion (DIN 45004, par. 6,3; 3-tone)				
VHF	$V_{o(rms)}$	> typ.	111 113	dBμV dBμV
UHF	$V_{o(rms)}$	> typ.	110 112	dBμV dBμV
Noise figure	F	typ.	7	dB

s-parameters: $s_f = s_{21}$ $s_i = s_{11}$
$s_r = s_{12}$ $s_o = s_{22}$

---

* Highest value, for a sample, occurring in the frequency range.

OPERATING CONDITIONS

Ambient temperature range	T_{amb}		−20 to +70	°C
D.C. supply voltage	V_B	=	12	V ± 10%
Frequency range	f		40 to 860	MHz
Source impedance and load impedance	R_s, R_ℓ	=	75	Ω

MECHANICAL DATA

Dimensions in mm

The device is resin coated.

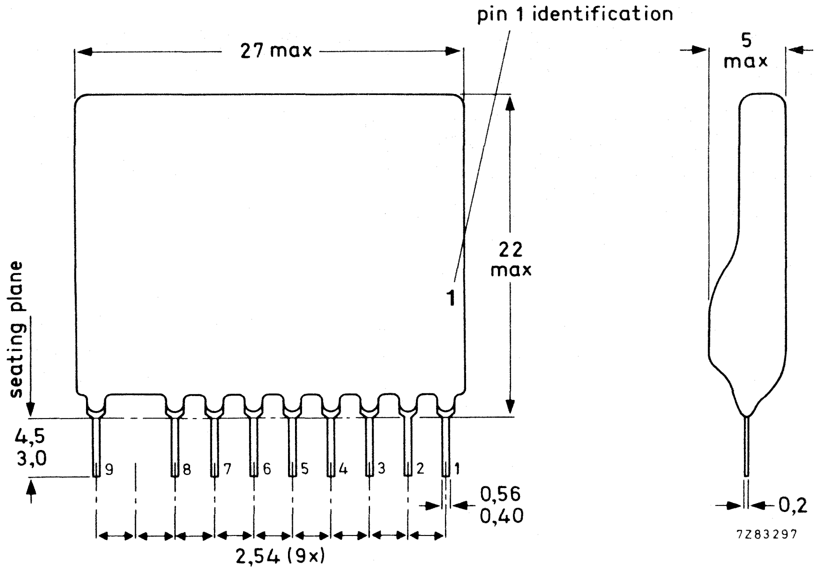

Fig. 2 Encapsulation.

Terminal connections

1 = input
2, 3, 4, 5 and 7, 8 = common
6 = supply (+)
9 = output/supply (+)

Soldering recommendations

Hand soldering

Maximum contact time for a soldering-iron temperature of 260 °C up to the seating plane is 5 s.

Dip or wave soldering

260 °C is the maximum permissible temperature of the solder; it must not be in contact with the joint for more than 5 seconds. The total contact time of successive solder waves must not exceed 5 seconds. The device may be mounted against the printed-circuit board, but the temperature of the device must not exceed 125 °C. If the printed-circuit board has been pre-heated, forced cooling may be necessary immediately after soldering to keep the temperature below the allowable limit.

Mounting recommendations

The module should preferably be mounted on double-sided printed-circuit board, see the example shown below.

Input and output should be connected to 75 Ω tracks.

The connections to the 'common' pins should be as close to the seating plane as possible.

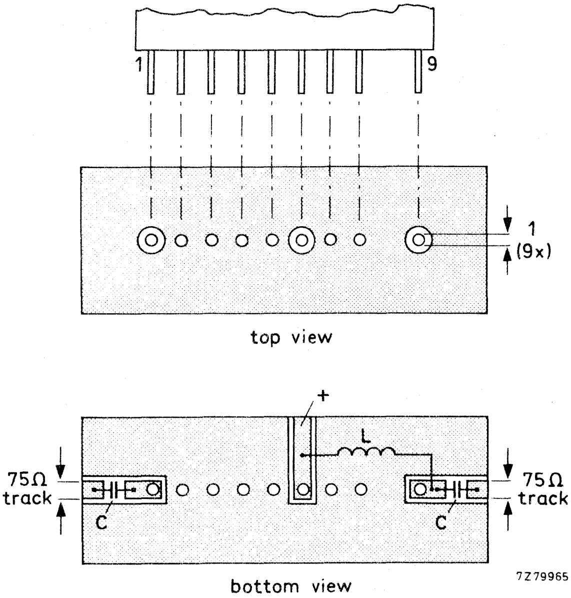

L > 5 μH; e.g. catalogue no. 3122 108 20150 or 27 turns enamelled Cu wire (0,3 mm) wound on a ferrite core (material 4B1; catalogue no. 3122 104 91110) with a diameter of 1,6 mm.
C > 220 pF ceramic capacitor.

Fig. 3 Printed-circuit board holes and tracks.

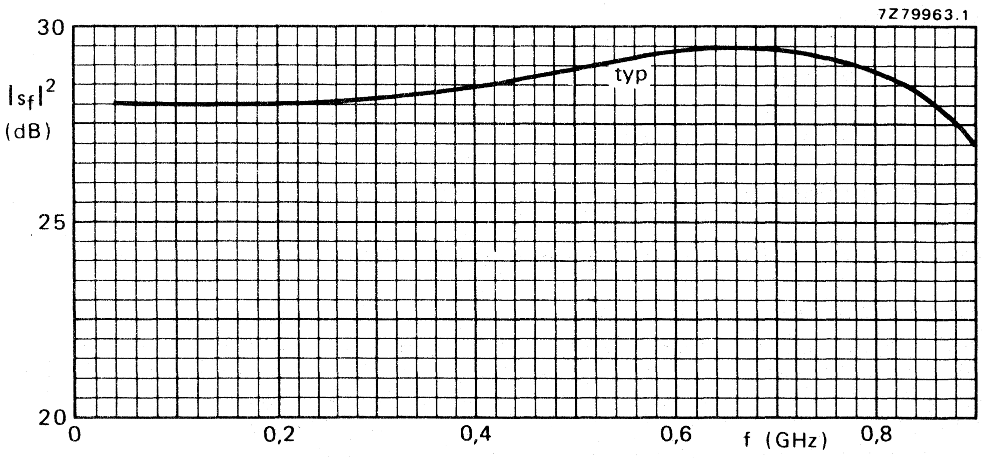

Fig. 4 Transducer gain as a function of frequency; Z_o = 75 Ω.

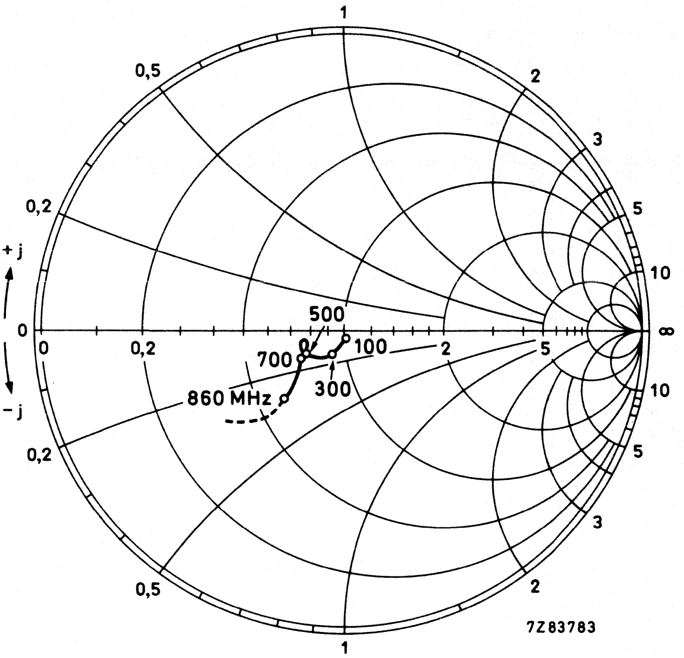

Fig. 5 Input impedance derived from input reflection coefficient s_i, co-ordinates in ohm x 75; typical values.

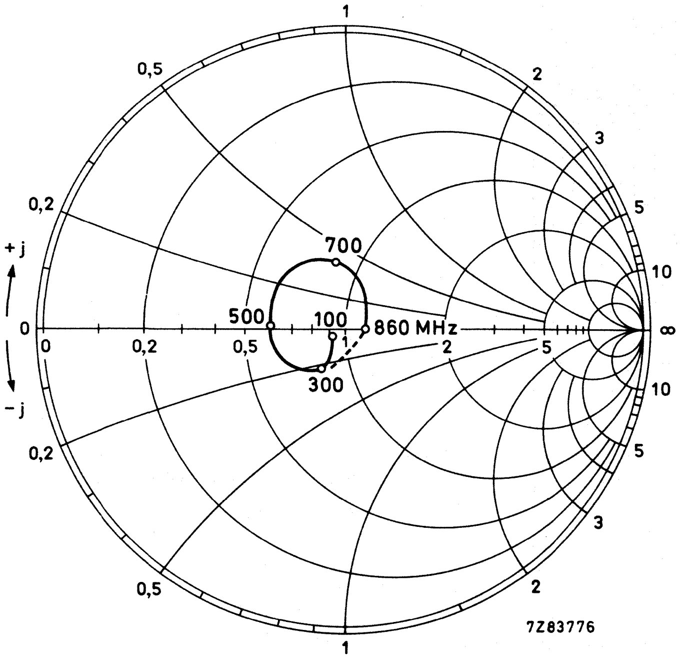

Fig. 6 Output impedance derived from output reflection coefficient s_o, co-ordinates in ohm x 75; typical values.

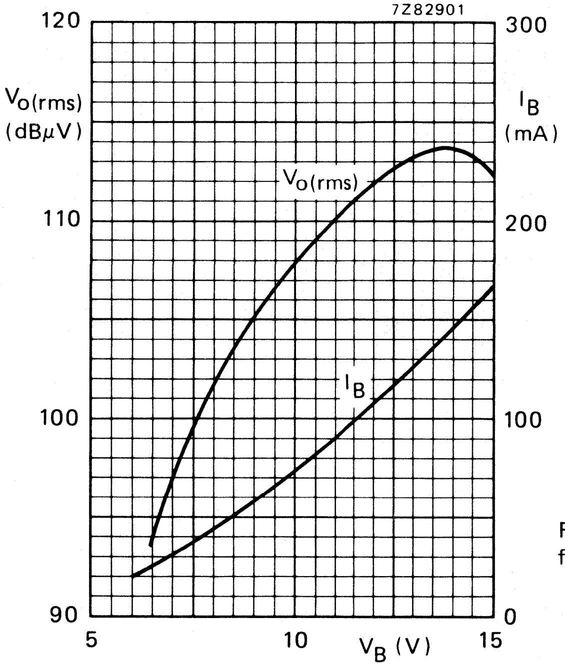

Fig. 7 Output voltage and supply current as a function of the supply voltage; typical values.

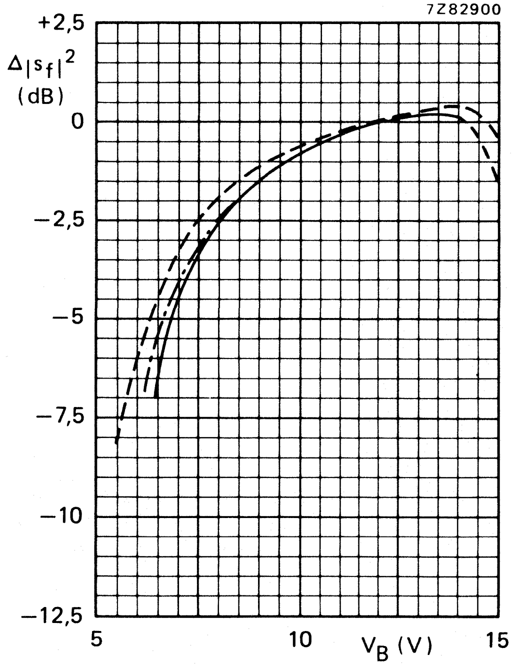

Fig. 8 Variation of transducer gain with supply voltage; reference 0 dB at 12 V;
——— f = 500 MHz;
– – – – f = 100 MHz;
—.—.—. f = 860 MHz;
typical values.

MECHANICAL DATA

Dimensions in mm

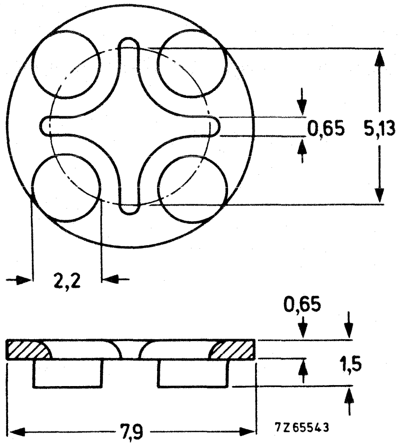

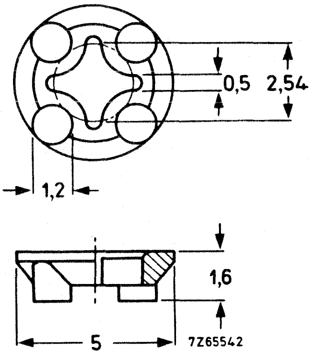

Distance disc 56245 for TO-5 or TO-39; insulating material.

Distance disc 56246 for TO-18 or TO-72; insulating material.

Maximum permissible temperature: 100 °C.

ROUND HEAD SCREW 6-32 UNC-2A

Available, upon request, under type number 56396 or 12 NC code number 9390 298 10xx0.

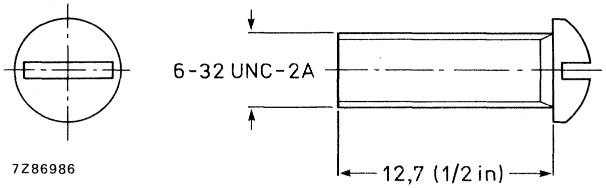

INDEX OF TYPE NUMBERS

The inclusion of a type number in this publication does not necessarily imply its availability.

Mm = Microminiature semiconductors for hybrid circuits
SD = Small-signal diodes
Sp = Special diodes
T = Tuner diodes
Vrg = Voltage regulator diodes

type no.	book	section	type no.	book	section	type no.	book	section
BBY39	S1	T	BC639	S3	Sm	BCW72;R	S7	Mm
BBY40	S7/S1	Mm/T	BC640	S3	Sm	BCW81;R	S7	Mm
BC107	S3	Sm	BC807	S7	Mm	BCW89;R	S7	Mm
BC108	S3	Sm	BC808	S7	Mm	BCX17;R	S7	Mm
BC109	S3	Sm	BC817	S7	Mm	BCX18;R	S7	Mm
BC140	S3	Sm	BC818	S7	Mm	BCX19;R	S7	Mm
BC141	S3	Sm	BC846	S7	Mm	BCX20;R	S7	Mm
BC146	S3	Sm	BC847	S7	Mm	BCX51	S7	Mm
BC160	S3	Sm	BC848	S7	Mm	BCX52	S7	Mm
BC161	S3	Sm	BC849	S7	Mm	BCX53	S7	Mm
BC177	S3	Sm	BC850	S7	Mm	BCX54	S7	Mm
BC178	S3	Sm	BC856	S7	Mm	BCX55	S7	Mm
BC179	S3	Sm	BC857	S7	Mm	BCX56	S7	Mm
BC200	S3	Sm	BC858	S7	Mm	BCX68	S7	Mm
BC264A	S5	FET	BC859	S7	Mm	BCX69	S7	mm
BC264B	S5	FET	BC860	S7	Mm	BCX70*	S7	Mm
BC264C	S5	FET	BC868	S7	Mm	BCX71*	S7	Mm
BC264D	S5	FET	BC869	S7	Mm	BCY56	S3	Sm
BC327;A	S3	Sm	BCF29;R	S7	Mm	BCY57	S3	Sm
BC328	S3	Sm	BCF30;R	S7	Mm	BCY58	S3	Sm
BC337;A	S3	Sm	BCF32;R	S7	Mm	BCY59	S3	Sm
BC338	S3	Sm	BCF33;R	S7	Mm	BCY70	S3	Sm
BC368	S3	Sm	BCF70;R	S7	Mm	BCY71	S3	Sm
BC369	S3	Sm	BCF81;R	S7	Mm	BCY72	S3	Sm
BC375	S3	Sm	BCV26	S7	Mm	BCY78	S3	Sm
BC376	S3	Sm	BCV27	S7	Mm	BCY79	S3	Sm
BC546	S3	Sm	BCV61	S7	Mm	BCY87	S3	Sm
BC547	S3	Sm	BCV62	S7	Mm	BCY88	S3	Sm
BC548	S3	Sm	BCV71;R	S7	Mm	BCY89	S3	Sm
BC549	S3	Sm	BCV72;R	S7	Mm	BD131	S4a	P
BC550	S3	Sm	BCW29;R	S7	Mm	BD132	S4a	P
BC556	S3	Sm	BCW30;R	S7	Mm	BD135	S4a	P
BC557	S3	Sm	BCW31;R	S7	Mm	BD136	S4a	P
BC558	S3	Sm	BCW32;R	S7	Mm	BD137	S4a	P
BC559	S3	Sm	BCW33;R	S7	Mm	BD138	S4a	P
BC560	S3	Sm	BCW60*	S7	Mm	BD139	S4a	P
BC635	S3	Sm	BCW61*	S7	Mm	BD140	S4a	P
BC636	S3	Sm	BCW69;R	S7	Mm	BD201	S4a	P
BC637	S3	Sm	BCW70;R	S7	Mm	BD202	S4a	P
BC638	S3	Sm	BCW71;R	S7	Mm	BD203	S4a	P

* = series
FET = Field-effect transistors
Mm = Microminiature semiconductors for hybrid circuits

P = Low-frequency power transistors
Sm = Small-signal transistors
T = Tuner diodes

type no.	book	section
BD204	S4a	P
BD226	S4a	P
BD227	S4a	P
BD228	S4a	P
BD229	S4a	P
BD230	S4a	P
BD231	S4a	P
BD233	S4a	P
BD234	S4a	P
BD235	S4a	P
BD236	S4a	P
BD237	S4a	P
BD238	S4a	P
BD239	S4a	P
BD239A	S4a	P
BD239B	S4a	P
BD239C	S4a	P
BD240	S4a	P
BD240A	S4a	P
BD240B	S4a	P
BD240C	S4a	P
BD241	S4a	P
BD241A	S4a	P
BD241B	S4a	P
BD241C	S4a	P
BD242	S4a	P
BD242A	S4a	P
BD242B	S4a	P
BD242C	S4a	P
BD243	S4a	P
BD243A	S4a	P
BD243B	S4a	P
BD243C	S4a	P
BD244	S4a	P
BD244A	S4a	P
BD244B	S4a	P
BD244C	S4a	P
BD329	S4a	P
BD330	S4a	P
BD331	S4a	P
BD332	S4a	P
BD333	S4a	P
BD334	S4a	P
BD335	S4a	P
BD336	S4a	P
BD337	S4a	P
BD338	S4a	P
BD433	S4a	P
BD434	S4a	P
BD435	S4a	P
BD436	S4a	P
BD437	S4a	P
BD438	S4a	P
BD645	S4a	P
BD646	S4a	P
BD647	S4a	P
BD648	S4a	P
BD649	S4a	P
BD650	S4a	P
BD651	S4a	P
BD652	S4a	P
BD675	S4a	P
BD676	S4a	P
BD677	S4a	P
BD678	S4a	P
BD679	S4a	P
BD680	S4a	P
BD681	S4a	P
BD682	S4a	P
BD683	S4a	P
BD684	S4a	P
BD813	S4a	P
BD814	S4a	P
BD815	S4a	P
BD816	S4a	P
BD817	S4a	P
BD818	S4a	P
BD825	S4a	P
BD826	S4a	P
BD827	S4a	P
BD828	S4a	P
BD829	S4a	P
BD830	S4a	P
BD839	S4a	P
BD840	S4a	P
BD841	S4a	P
BD842	S4a	P
BD843	S4a	P
BD844	S4a	P
BD845	S4a	P
BD846	S4a	P
BD847	S4a	P
BD848	S4a	P
BD849	S4a	P
BD850	S4a	P
BD933	S4a	P
BD934	S4a	P
BD935	S4a	P
BD936	S4a	P
BD937	S4a	P
BD938	S4a	P
BD939	S4a	P
BD940	S4a	P
BD941	S4a	P
BD942	S4a	P
BD943	S4a	P
BD944	S4a	P
BD945	S4a	P
BD946	S4a	P
BD947	S4a	P
BD948	S4a	P
BD949	S4a	P
BD950	S4a	P
BD951	S4a	P
BD952	S4a	P
BD953	S4a	P
BD954	S4a	P
BD955	S4a	P
BD956	S4a	P
BDT20	S4a	P

P = Low-frequency power transistors

P = Low-frequency power transistors

type no.	book	section
BDX65	S4a	P
BDX65A	S4a	P
BDX65B	S4a	P
BDX65C	S4a	P
BDX66	S4a	P
BDX66A	S4a	P
BDX66B	S4a	P
BDX66C	S4a	P
BDX67	S4a	P
BDX67A	S4a	P
BDX67B	S4a	P
BDX67C	S4a	P
BDX68	S4a	P
BDX68A	S4a	P
BDX68B	S4a	P
BDX68C	S4a	P
BDX69	S4a	P
BDX69A	S4a	P
BDX69B	S4a	P
BDX69C	S4a	P
BDX77	S4a	P
BDX78	S4a	P
BDX91	S4a	P
BDX92	S4a	P
BDX93	S4a	P
BDX94	S4a	P
BDX95	S4a	P
BDX96	S4a	P
BDY90	S4a	P
BDY90A	S4a	P
BDY91	S4a	P
BDY92	S4a	P
BF198	S3	Sm
BF199	S3	Sm
BF240	S3	Sm
BF241	S3	Sm
BF245A	S5	FET
BF245B	S5	FET
BF245C	S5	FET
BF247A	S5	FET
BF247B	S5	FET
BF247C	S5	FET
BF256A	S5	FET
BF256B	S5	FET
BF256C	S5	FET
BF324	S3	Sm
BF370	S3	Sm
BF410A	S5	FET
BF410B	S5	FET
BF410C	S5	FET
BF410D	S5	FET
BF419	S4b	HVP
BF420	S3	Sm
BF421	S3	Sm
BF422	S3	Sm
BF423	S3	Sm
BF450	S3	Sm
BF451	S3	Sm
BF457	S4b	HVP
BF458	S4b	HVP
BF459	S4b	HVP
BF469	S4b	HVP
BF470	S4b	HVP
BF471	S4b	HVP
BF472	S4b	HVP
BF483	S3	Sm
BF485	S3	Sm
BF487	S3	Sm
BF494	S3	Sm
BF495	S3	Sm
BF496	S3	Sm
BF510	S7/S5	Mm/FET
BF511	S7/S5	Mm/FET
BF512	S7/S5	Mm/FET
BF513	S7/S5	Mm/FET
BF536	S7	Mm
BF550;R	S7	Mm
BF569	S7	Mm
BF579	S7	Mm
BF583	S4b	HVP
BF585	S4b	HVP
BF587	S4b	HVP
BF591	S4b	HVP
BF593	S4b	HVP
BF620	S7	Mm
BF621	S7	Mm
BF622	S7	Mm
BF623	S7	Mm
BF660;R	S7	Mm
BF689K	S10	WBT
BF763	S10	WBT
BF767	S7	Mm
BF819	S4b	HVP
BF820	S7	Mm
BF821	S7	Mm
BF822	S7	Mm
BF823	S7	Mm
BF824	S7	Mm
BF840	S7	Mm
BF841	S7	Mm
BF857	S4b	HVP
BF858	S4b	HVP
BF859	S4b	HVP
BF869	S4b	HVP
BF870	S4b	HVP
BF871	S4b	HVP
BF872	S4b	HVP
BF926	S3	Sm
BF936	S3	Sm
BF939	S3	Sm
BF960	S5	FET
BF964	S5	FET
BF966	S5	FET
BF967	S3	Sm
BF970	S3	Sm
BF979	S3	Sm
BF980	S5	FET
BF981	S5	FET
BF982	S5	FET
BF989	S7/S5	Mm/FET

FET = Field-effect transistors
HVP = High-voltage power transistors
Mm = Microminiature semiconductors for hybrid circuits
P = Low-frequency power transistors
Sm = Small-signal transistors
WBT = Wideband transistors

type no.	book	section
BF990	S7/S5	Mm/FET
BF991	S7/S5	Mm/FET
BF992	S7/S5	Mm/FET
BF994	S7/S5	Mm/FET
BF996	S7/S5	Mm/FET
BFG23	S10	WBT
BFG32	S10	WBT
BFG34	S10	WBT
BFG51	S10	WBT
BFG65	S10	WBT
BFG67	S7	Mm
BFG90A	S10	WBT
BFG92A	S10	WBT
BFG93A	S10	WBT
BFG96	S10	WBT
BFG195	S10	WBT
BFP90A	S10	WBT
BFP91A	S10	WBT
BFP96	S10	WBT
BFQ10	S5	FET
BFQ11	S5	FET
BFQ12	S5	FET
BFQ13	S5	FET
BFQ14	S5	FET
BFQ15	S5	FET
BFQ16	S5	FET
BFQ17	S7/S10	Mm/WBT
BFQ18A	S7/S10	Mm/WBT
BFQ19	S7/S10	Mm/WBT
BFQ22S	S10	WBT
BFQ23	S10	WBT
BFQ23C	S10	WBT
BFQ24	S10	WBT
BFQ32	S10	WBT
BFQ32C	S10	WBT
BFQ32M	S10	WBT
BFQ32S	S10	WBT
BFQ33	S10	WBT
BFQ33C	S10	WBT
BFQ34	S10	WBT
BFQ34T	S10	WBT
BFQ42	S6	RFP
BFQ43	S6	RFP
BFQ43S	S6	RFP
BFQ51	S10	WBT
BFQ51C	S10	WBT
BFQ52	S10	WBT
BFQ53	S10	WBT
BFQ63	S10	WBT
BFQ65	S10	WBT
BFQ66	S10	WBT
BFQ67	S7/S10	Mm/WBT
BFQ68	S10	WBT
BFQ136	S10	WBT
BFR29	S5	FET
BFR30	S7/S5	Mm/FET
BFR31	S7/S5	Mm/FET
BFR49	S10	WBT
BFR53	S7/S10	Mm/WBT
BFR53R	S7	Mm
BFR54	S3	Sm
BFR64	S10	WBT
BFR65	S10	WBT
BFR84	S5	FET
BFR90	S10	WBT
BFR90A	S10	WBT
BFR91	S10	WBT
BFR91A	S10	WBT
BFR92	S7/S10	Mm/WBT
BFR92A	S7/S10	Mm/WBT
BFR92AR	S7	Mm
BFR92R	S7	Mm
BFR93	S7/S10	Mm/WBT
BFR93A	S7/S10	Mm/WBT
BFR93AR	S7	Mm
BFR93R	S7	Mm
BFR94	S10	WBT
BFR95	S10	WBT
BFR96	S10	WBT
BFR96S	S10	WBT
BFR101A;B	S7/S5	Mm/FET
BFS17	S7/S10	Mm/WBT
BFS17A	S10	WBT
BFS17R	S7	Mm
BFS18;R	S7	Mm
BFS19;R	S7	Mm
BFS20;R	S7	Mm
BFS21	S5	FET
BFS21A	S5	FET
BFS22A	S6	RFP
BFS23A	S6	RFP
BFT24	S10	WBT
BFT25	S7/S10	Mm/WBT
BFT25R	S7	Mm
BFT44	S3	Sm
BFT45	S3	Sm
BFT46	S7/S5	Mm/FET
BFT92	S7/S10	Mm/WBT
BFT92R	S7	Mm
BFT93	S7/S10	Mm/WBT
BFT93R	S7	Mm
BFW10	S5	FET
BFW11	S5	FET
BFW12	S5	FET
BFW13	S5	FET
BFW16A	S10	WBT
BFW17A	S10	WBT
BFW30	S10	WBT
BFW61	S5	FET
BFW92	S10	WBT
BFW92A	S10	WBT
BFW93	S10	WBT
BFX29	S3	Sm
BFX30	S3	Sm
BFX34	S3	Sm
BFX84	S3	Sm
BFX85	S3	Sm
BFX86	S3	Sm
BFX87	S3	Sm
BFX88	S3	Sm

FET = Field-effect transistors
Mm = Microminiature semiconductors for hybrid circuits
RFP = R.F. power transistors and modules
RT = Tripler
Sm = Small-signal transistors
WBM = Wideband hybrid IC modules
WBT = Wideband transistors

type no.	book	section
BFX89	S10	WBT
BFY50	S3	Sm
BFY51	S3	Sm
BFY52	S3	Sm
BFY55	S3	Sm
BFY90	S10	WBT
BG2000	S1	RT
BG2097	S1	RT
BGD102	S10	WBM
BGD102E	S10	WBM
BGD104	S10	WBM
BGD104E	S10	WBM
BGD502	S10	WBM
BGD504	S10	WBM
BGX885	S10	WBM
BGY22	S6	RFP
BGY22A	S6	RFP
BGY23	S6	RFP
BGY23A	S6	RFP
BGY32	S6	RFP
BGY33	S6	RFP
BGY35	S6	RFP
BGY36	S6	RFP
BGY40A	S6	RFP
BGY40B	S6	RFP
BGY41A	S6	RFP
BGY41B	S6	RFP
BGY43	S6	RFP
BGY45A	S6	RFP
BGY45B	S6	RFP
BGY46A	S6	RFP
BGY46B	S6	RFP
BGY47 *	S6	RFP
BGY48 *	S6	RFP
BGY50	S10	WBM
BGY51	S10	WBM
BGY52	S10	WBM
BGY53	S10	WBM
BGY54	S10	WBM
BGY55	S10	WBM
BGY56	S10	WBM
BGY57	S10	WBM
BGY58	S10	WBM
BGY58A	S10	WBM
BGY59	S10	WBM
BGY60	S10	WBM
BGY61	S10	WBM
BGY65	S10	WBM
BGY67	S10	WBM
BGY67A	S10	WBM
BGY70	S10	WBM
BGY71	S10	WBM
BGY74	S10	WBM
BGY75	S10	WBM
BGY78	S10	WBM
BGY84	S10	WBM
BGY84A	S10	WBM
BGY85	S10	WBM
BGY85A	S10	WBM
BGY86	S10	WBM
BGY87	S10	WBM
BGY88	S10	WBM
BGY90A	S6	RFP
BGY90B	S6	RFP
BGY93 *	S6	RFP
BGY94 *	S6	RFP
BGY95A	S6	RFP
BGY95B	S6	RFP
BGY96A	S6	RFP
BGY96B	S6	RFP
BGY584A	S10	WBM
BGY585A	S10	WBM
BGY586	S10	WBM
BGY587	S10	WBM
BLF146	S6	RFP/FET
BLF242	S6	RFP/FET
BLF244	S6	RFP/FET
BLF245	S6	RFP/FET
BLT90/SL	S6	RFP
BLT91/SL	S6	RFP
BLT92/SL	S6	RFP
BLU20/12	S6	RFP
BLU30/12	S6	RFP
BLU45/12	S6	RFP
BLU50	S6	RFP
BLU51	S6	RFP
BLU52	S6	RFP
BLU53	S6	RFP
BLU60/12	S6	RFP
BLU97	S6	RFP
BLU98	S6	RFP
BLU99	S6	RFP
BLV10	S6	RFP
BLV11	S6	RFP
BLV20	S6	RFP
BLV21	S6	RFP
BLV25	S6	RFP
BLV30	S6	RFP
BLV30/12	S6	RFP
BLV31	S6	RFP
BLV32F	S6	RFP
BLV33	S6	RFP
BLV33F	S6	RFP
BLV36	S6	RFP
BLV45/12	S6	RFP
BLV57	S6	RFP
BLV59	S6	RFP
BLV75/12	S6	RFP
BLV80/28	S6	RFP
BLV90	S6	RFP
BLV90/SL	S6	RFP
BLV91	S6	RFP
BLV91/SL	S6	RFP
BLV92	S6	RFP
BLV93	S6	RFP
BLV94	S6	RFP
BLV95	S6	RFP
BLV97	S6	RFP
BLV98	S6	RFP
BLV99	S6	RFP

* = series
FET = Field-effect transistors
RFP = R.F. power transistors and modules
WMB = Wideband hybrid IC modules

type no.	book	section
BLW29	S6	RFP
BLW31	S6	RFP
BLW32	S6	RFP
BLW33	S6	RFP
BLW34	S6	RFP
BLW50F	S6	RFP
BLW60	S6	RFP
BLW60C	S6	RFP
BLW76	S6	RFP
BLW77	S6	RFP
BLW78	S6	RFP
BLW79	S6	RFP
BLW80	S6	RFP
BLW81	S6	RFP
BLW83	S6	RFP
BLW84	S6	RFP
BLW85	S6	RFP
BLW86	S6	RFP
BLW87	S6	RFP
BLW89	S6	RFP
BLW90	S6	RFP
BLW91	S6	RFP
BLW95	S6	RFP
BLW96	S6	RFP
BLW97	S6	RFP
BLW98	S6	RFP
BLW99	S6	RFP
BLX13	S6	RFP
BLX13C	S6	RFP
BLX14	S6	RFP
BLX15	S6	RFP
BLX39	S6	RFP
BLX65	S6	RFP
BLX65E	S6	RFP
BLX65ES	S6	RFP
BLX67	S6	RFP
BLX68	S6	RFP
BLX69A	S6	RFP
BLX91A	S6	RFP
BLX91CB	S6	RFP
BLX92A	S6	RFP
BLX93A	S6	RFP
BLX94A	S6	RFP
BLX94C	S6	RFP
BLX95	S6	RFP
BLX96	S6	RFP
BLX97	S6	RFP
BLX98	S6	RFP
BLY87A	S6	RFP
BLY87C	S6	RFP
BLY88A	S6	RFP
BLY88C	S6	RFP
BLY89A	S6	RFP
BLY89C	S6	RFP
BLY90	S6	RFP
BLY91A	S6	RFP
BLY91C	S6	RFP
BLY92A	S6	RFP
BLY92C	S6	RFP
BLY93A	S6	RFP
BLY93C	S6	RFP
BLY94	S6	RFP
BPF24	S8b	PDT
BPW22A	S8a/b	PDT
BPW50	S8a/b	PDT
BPW71	S8b	PDT
BPX25	S8b	PDT
BPX29	S8b	PDT
BPX40	S8b	PDT
BPX41	S8b	PDT
BPX42	S8b	PDT
BPX61	S8b	PDT
BPX61P	S8b	PDT
BPX71	S8b	PDT
BPX72	S8b	PDT
BR100/03	S2b	Th
BR101	S3	Sm
BR210*	S2a	Th
BR216*	S2a	Th
BR220*	S2a	Th
BRY39	S3	Sm
BRY56	S3	Sm
BRY61	S7	Mm
BRY62	S7	Mm
BS107	S5	FET
BS170	S5	FET
BSD10	S5	FET
BSD12	S5	FET
BSD20	S5/7	FET
BSD22	S5/7	FET
BSD212	S5	FET
BSD213	S5	FET
BSD214	S5	FET
BSD215	S5	FET
BSR12;R	S7	Mm
BSR13;R	S7	Mm
BSR14;R	S7	Mm
BSR15;R	S7	Mm
BSR16;R	S7	Mm
BSR17;R	S7	Mm
BSR17A;R	S7	Mm
BSR18;R	S7	Mm
BSR18A;R	S7	Mm
BSR19; A	S7	Mm
BSR20; A	S7	Mm
BSR30	S7	Mm
BSR31	S7	Mm
BSR32	S7	Mm
BSR33	S7	Mm
BSR40	S7	Mm
BSR41	S7	Mm
BSR42	S7	Mm
BSR43	S7	Mm
BSR50	S3	Sm
BSR51	S3	Sm
BSR52	S3	Sm
BSR56	S7/S5	Mm/FET
BSR57	S7/S5	Mm/FET
BSR58	S7/S5	Mm/FET
BSR60	S3	Sm

FET = Field-effect transistors
Mm = Microminiature semiconductors for hybrid circuits
PDT = Photodiodes or transistors
RFP = R.F. power transistors and modules
Sm = Small-signal transistors
Th = Thyristors

* = series
FET = Field-effect transistors
Mm = Microminiature semiconductors for hybrid circuits
Sm = Small-signal transistors
SP = Low-frequency switching power transistors
Th = Thyristors
Tri = Triacs

type no.	book	section
BUS21*	S4b	SP
BUS22*	S4b	SP
BUS23*	S4b	SP
BUT11;A	S4b	SP
BUT11A	S4b	SP
BUT11AF	S4b	SP
BUV82	S4b	SP
BUV83	S4b	SP
BUV89	S4b	SP
BUV90;A	S4b	SP
BUW11;A	S4b	SP
BUW12;A	S4b	SP
BUW13;A	S4b	SP
BUW84	S4b	SP
BUW85	S4b	SP
BUX46;A	S4b	SP
BUX47;A	S4b	SP
BUX48;A	S4b	SP
BUX80	S4b	SP
BUX81	S4b	SP
BUX82	S4b	SP
BUX83	S4b	SP
BUX84	S4b	SP
BUX84F	S4b	SP
BUX85	S4b	SP
BUX85F	S4b	SP
BUX86	S4b	SP
BUX87	S4b	SP
BUX88	S4b	SP
BUX90	S4b	SP
BUX98	S4b	SP
BUX98A	S4b	SP
BUX99	S4b	SP
BUY89	S4b	SP
BUZ10	S9	PM
BUZ10A	S9	PM
BUZ11	S9	PM
BUZ11A	S9	PM
BUZ14	S9	PM
BUZ15	S9	PM
BUZ20	S9	PM
BUZ21	S9	PM
BUZ23	S9	PM
BUZ24	S9	PM
BUZ25	S9	PM
BUZ30	S9	PM
BUZ31	S9	PM
BUZ32	S9	PM
BUZ33	S9	PM
BUZ34	S9	PM
BUZ35	S9	PM
BUZ36	S9	PM
BUZ40	S9	PM
BUZ41A	S9	PM
BUZ42	S9	PM
BUZ43	S9	PM
BUZ44A	S9	PM
BUZ45	S9	PM
BUZ45A	S9	PM
BUZ45B	S9	PM
BUZ45C	S9	PM
BUZ46	S9	PM
BUZ50A	S9	PM
BUZ50B	S9	PM
BUZ53A	S9	PM
BUZ54	S9	PM
BUZ54A	S9	PM
BUZ60	S9	PM
BUZ60B	S9	PM
BUZ63	S9	PM
BUZ63B	S9	PM
BUZ64	S9	PM
BUZ71	S9	PM
BUZ71A	S9	PM
BUZ72	S9	PM
BUZ72A	S9	PM
BUZ73A	S9	PM
BUZ74	S9	PM
BUZ74A	S9	PM
BUZ76	S9	PM
BUZ76A	S9	PM
BUZ80	S9	PM
BUZ80A	S9	PM
BUZ83	S9	PM
BUZ83A	S9	PM
BUZ84	S9	PM
BUZ84A	S9	PM
BY224*	S2a	R
BY225*	S2a	R
BY228	S1	R
BY229*	S2a	R
BY229F*	S2a	R
BY249*	S2a	R
BY260*	S2a	R
BY261*	S2a	R
BY329*	S2a	R
BY359*	S2a	R
BY438	S1	R
BY448	S1	R
BY458	S1	R
BY505	S1	R
BY509	S1	R
BY527	S1	R
BY584	S1	R
BY588	S1	R
BY609	S1	R
BY610	S1	R
BY614	S1	R
BY619	S1	R
BY620	S1	R
BY627	S1	R
BY707	S1	R
BY708	S1	R
BY709	S1	R
BY710	S1	R
BY711	S1	R
BY712	S1	R
BY713	S1	R
BY714	S1	R
BYD13 *	S1	R

* = series
PM = Power MOS transistors
R = Rectifier diodes
SP = Low-frequency switching power transistors

* = series
M = Microwave transistors
Mm = Microminiature semiconductors for hybrid circuits
PhC = Photocouplers
R = Rectifier diodes
TS = Transient suppressor diodes
Vrf = Voltage reference diodes
Vrg = Voltage regulator diodes

type no.	book	section
CNX21	S8b	PhC
CNX35	S8b	PhC
CNX35U	S8b	PhC
CNX36	S8b	PhC
CNX36U	S8b	PhC
CNX38	S8b	PhC
CNX38U	S8b	PhC
CNX39	S8b	PhC
CNX39U	S8b	PhC
CNX44	S8b	PhC
CNX44A	S8b	PhC
CNX46	S8b	PhC
CNX48	S8b	PhC
CNX48U	S8b	PhC
CNX62	S8b	PhC
CNX72	S8b	PhC
CNX82	S8b	PhC
CNX83	S8b	PhC
CNX91	S8b	PhC
CNX92	S8b	PhC
CNY17-1	S8b	PhC
CNY17-2	S8b	PhC
CNY17-3	S8b	PhC
CNY50	S8b	PhC
CNY57	S8b	PhC
CNY57A	S8b	PhC
CNY57AU	S8b	PhC
CNY57U	S8b	PhC
CNY62	S8b	PhC
CNY63	S8b	PhC
CQF24	S8b	Ph
CQL10A	S8b	Ph
CQL13A	S8b	Ph
CQL16	S8b	Ph
CQS51L	S8a	LED
CQS54	S8a	LED
CQS82L	S8a	LED
CQS82AL	S8a	LED
CQS84L	S8a	LED
CQS86L	S8a	LED
CQS93	S8a	LED
CQS93E	S8a	LED
CQS93L	S8a	LED
CQS95	S8a	LED
CQS95E	S8a	LED
CQS95L	S8a	LED
CQS97	S8a	LED
CQS97E	S8a	LED
CQS97L	S8a	LED
CQT10B	S8a	LED
CQT24	S8a	LED
CQT60	S8a	LED
CQT70	S8a	LED
CQT80L	S8a	LED
CQV70(L)	S8a	LED
CQV70A(L)	S8a	LED
CQV70U(L)	S8a	LED
CQV71A(L)	S8a	LED
CQV72(L)	S8a	LED
CQV80L	S8a	LED
CQV80AL	S8a	LED
CQV80UL	S8a	LED
CQV81L	S8a	LED
CQV82L	S8a	LED
CQW10A(L)	S8a	LED
CQW10B(L)	S8a	LED
CQW10U(L)	S8a	LED
CQW11B(L)	S8a	LED
CQW12B(L)	S8a	LED
CQW20A	S8a	LED
CQW21	S8a	LED
CQW22	S8a	LED
CQW24(L)	S8a	LED
CQW54	S8a	LED
CQW60(L)	S8a	LED
CQW60A(L)	S8a	LED
CQW60U(L)	S8a	LED
CQW61(L)	S8a	LED
CQW62(L)	S8a	LED
CQW89A	S8a/b	I
CQW93	S8a	LED
CQW95	S8a	LED
CQW97	S8a	LED
CQX24(L)	S8a	LED
CQX51(L)	S8a	LED
CQX54(L)	S8a	LED
CQX54D	S8a	LED
CQX64(L)	S8a	LED
CQX64D	S8a	LED
CQX74(L)	S8a	LED
CQX74D	S8a	LED
CQY11B	S8b	LED
CQY11C	S8b	LED
CQY24B(L)	S8a	LED
CQY49B	S8b	LED
CQY49C	S8b	LED
CQY50	S8b	LED
CQY52	S8b	LED
CQY53S	S8b	LED
CQY54A	S8a	LED
CQY58A	S8a/b	I
CQY89A	S8a/b	I
CQY94B(L)	S8a	LED
CQY95B	S8a	LED
CQY96(L)	S8a	LED
CQY97A	S8a	LED
Fresnel-lens	S8b	A
H11A1	S8b	PhC
H11A2	S8b	PhC
H11A3	S8b	PhC
H11A4	S8b	PhC
H11A5	S8b	PhC
H11B1	S8b	PhC
H11B2	S8b	PhC
H11B3	S8b	PhC
H11B255	S8b	PhC
KMZ10A	S13	SEN
KMZ10B	S13	SEN
KMZ10C	S13	SEN

* = series
A = Accessories
I = Infrared devices
LED = Light-emitting diodes
M = Microwave transistors

Ph = Photoconductive devices
PhC = Photocouplers
SEN = Sensors

type no.	book	section
KP100A	S13	SEN
KP101A	S13	SEN
KPZ20G	S13	SEN
KPZ21G	S13	SEN
KTY81*	S13	SEN
KTY83*	S13	SEN
KTY84*	S13	SEN
LAE2001R	S11	M
LAE4001Q	S11	M
LAE4001R	S11	M
LAE4002S	S11	M
LAE6000Q	S11	M
LBE1004R	S11	M
LBE1010R	S11	M
LBE2003S	S11	M
LBE2005Q	S11	M
LBE2008T	S11	M
LBE2009S	S11	M
LCE1010R	S11	M
LCE2003S	S11	M
LCE2005Q	S11	M
LCE2008T	S11	M
LCE2009S	S11	M
LJE42002T	S11	M
LKE1004R	S11	M
LKE2002T	S11	M
LKE2004T	S11	M
LKE2015T	S11	M
LKE21004R	S11	M
LKE21015T	S11	M
LKE21050T	S11	M
LKE27010R	S11	M
LKE27025R	S11	M
LKE32002T	S11	M
LKE32004T	S11	M
LTE42005S	S11	M
LTE42008R	S11	M
LTE42012R	S11	M
LV1721E50R	S11	M
LV2024E45R	S11	M
LV2327E40R	S11	M
LV3742E16R	S11	M
LV3742E24R	S11	M
LWE2015R	S11	M
LWE2025R	S11	M
LZ1418E100R	S11	M
MCA230	S8b	PhC
MCA231	S8b	PhC
MCA255	S8b	PhC
MCT2	S8b	PhC
MCT26	S8b	PhC
MKB12040WS	S11	M
MKB12100WS	S11	M
MKB12140W	S11	M
MO6075B200Z	S11	M
MO6075B400Z	S11	M
MRB12175YR	S11	M
MRB12350YR	S11	M
MS1011B700Y	S11	M
MS6075B800Z	S11	M
MSB12900Y	S11	M
MZ0912B75Y	S11	M
MZ0912B150Y	S11	M
OM286; M	S13	SEN
OM287; M	S13	SEN
OM320	S10	WBM
OM321	S10	WBM
OM322	S10	WBM
OM323	S10	WBM
OM323A	S10	WBM
OM335	S10	WBM
OM336	S10	WBM
OM337	S10	WBM
OM337A	S10	WBM
OM339	S10	WBM
OM345	S10	WBM
OM350	S10	WBM
OM360	S10	WBM
OM361	S10	WBM
OM370	S10	WBM
OM386B	S13	SEN
OM386M	S13	SEN
OM387B	S13	SEN
OM387M	S13	SEN
OM388B	S13	SEN
OM389B	S13	SEN
OM931	S4a	P
OM961	S4a	P
OSB9115	S2a	St
OSB9215	S2a	St
OSB9415	S2a	St
OSM9115	S2a	St
OSM9215	S2a	St
OSM9415	S2a	St
OSM9510	S2a	St
OSM9511	S2a	St
OSM9512	S2a	St
OSS9115	S2a	St
OSS9215	S2a	St
OSS9415	S2a	St
P2105	S8b	I
PBMF4391	S5	FET
PBMF4392	S5	FET
PBMF4393	S5	FET
PDE1001U	S11	M
PDE1003U	S11	M
PDE1005U	S11	M
PDE1010U	S11	M
PEE1001U	S11	M
PEE1003U	S11	M
PEE1005U	S11	M
PEE1010U	S11	M
PH2222;R	S3	Sm
PH2222A;R	S3	Sm
PH2369	S3	Sm
PH2907;R	S3	Sm
PH2907A;R	S3	Sm
PH2955T	S4a	P
PH3055T	S4a	P
PH5415	S3	Sm

FET = Field-effect transistors
I = Infrared devices
M = Microwave transistors
Mm = Microminiature semiconductors for hybrid circuits
P = Low-frequency power transistors
PhC = Photocouplers
R = Rectifier diodes
SD = Small-signal diodes
SEN = Sensors
Sm = Small-signal transistors
SP = Low-frequency switching power transistors
St = Rectifier stacks
WBM = Wideband hybrid IC modules

INDEX

type no.	book	section	type no.	book	section	type no.	book	section
PH5416	S3	Sm	PTB42003X	S11	M	SL5505S	S8b	PhC
PH13002	S4b	SP	PV3742B4X	S11	M	SL5511	S8b	PhC
PH13003	S4b	SP	PVB42004X	S11	M	TIP29*	S4a	P
PHSD51	S2a	R	PZ1418B15U	S11	M	TIP30*	S4a	P
PKB3001U	S11	M	PZ1418B30U	S11	M	TIP31*	S4a	P
PKB3003U	S11	M	PZ1721B12U	S11	M	TIP32*	S4a	P
PKB3005U	S11	M	PZ1721B25U	S11	M	TIP33*	S4a	P
PKB12005U	S11	M	PZ2024B10U	S11	M	TIP34*	S4a	P
PKB20010U	S11	M	PZ2024B20U	S11	M	TIP41*	S4a	P
PKB23001U	S11	M	PZB16035U	S11	M	TIP42*	S4a	P
PKB23003U	S11	M	PZB27020U	S11	M	TIP47	S4a	P
PKB23005U	S11	M	RPY97	S8b	I	TIP48	S4a	P
PKB25006T	S11	M	RPY100	S8b	I	TIP49	S4a	P
PKB32001U	S11	M	RPY101	S8b	I	TIP50	S4a	P
PKB32003U	S11	M	RPY102	S8b	I	TIP110	S4a	P
PKB32005U	S11	M	RPY103	S8b	I	TIP111	S4a	P
PMBF4391	S7	Mm	RPY107	S8b	I	TIP112	S4a	P
PMBF4392	S7	Mm	RPY109	S8b	I	TIP115	S4a	P
PMBF4392	S7	Mm	RV3135B5X	S11	M	TIP116	S4a	P
PMLL4148	S1	SD	RX1214B300Y	S11	M	TIP117	S4a	P
PMLL4150	S1	SD	RXB12350Y	S11	M	TIP120	S4a	P
PMLL4151	S1	SD	RZ1214B35Y	S11	M	TIP121	S4a	P
PMLL4153	S1	SD	RZ1214B60W	S11	M	TIP122	S4a	P
PMLL4446	S1	SD	RZ1214B65Y	S11	M	TIP125	S4a	P
PMLL4448	S1	SD	RZ1214B125W	S11	M	TIP126	S4a	P
PMLL5225B			RZ1214B125Y	S11	M	TIP127	S4a	P
to	S1	SD	RZ1214B150Y	S11	M	TIP130	S4a	P
PMLL5267B			RZ2833B45W	S11	M	TIP131	S4a	P
PO44	S8b	PhC	RZ3135B15U	S11	M	TIP132	S4a	P
PO44A	S8b	PhC	RZ3135B15W	S11	M	TIP135	S4a	P
PPC5001T	S11	M	RZ3135B25U	S11	M	TIP136	S4a	P
PQC5001T	S11	M	RZ3135B30W	S11	M	TIP137	S4a	P
PTB23001X	S11	M	RZB12100Y	S11	M	TIP140	S4a	P
PTB23003X	S11	M	RZB12350Y	S11	M	TIP141	S4a	P
PTB23005X	S11	M	RZZ1214B300Y	S11	M	TIP145	S4a	P
PTB32001X	S11	M	SL5500	S8b	PhC	TIP146	S4a	P
PTB32003X	S11	M	SL5501	S8b	PhC	TIP147	S4a	P
PTB32005X	S11	M	SL5502R	S8b	PhC	TIP2955	S4a	P
PTB42001X	S11	M	SL5504	S8b	PhC	TIP3055	S4a	P
PTB42002X	S11	M	SL5504S	S8b	PhC	1N821;A	S1	Vrf

* = series
I = Infrared devices
M = Microwave transistors
P = Low-frequency power transistors
PhC = Photocouplers
R = Rectifier diodes
SD = Small-signal diodes
Vrf = Voltage reference diodes

INDEX

type no.	book	section
1N823;A	S1	Vrf
1N825;A	S1	Vrf
1N827;A	S1	Vrf
1N829;A	S1	Vrf
1N914	S1	SD
1N916	S1	SD
1N3879	S2a	R
1N3880	S2a	R
1N3881	S2a	R
1N3882	S2a	R
1N3883	S2a	R
1N3889	S2a	R
1N3890	S2a	R
1N3891	S2a	R
1N3892	S2a	R
1N3893	S2a	R
1N3909	S2a	R
1N3910	S2a	R
1N3911	S2a	R
1N3912	S2a	R
1N3913	S2a	R
1N4001G	S1	R
1N4002G	S1	R
1N4003G	S1	R
1N4004G	S1	R
1N4005G	S1	R
1N4006G	S1	R
1N4007G	S1	R
1N4148	S1	SD
1N4150	S1	SD
1N4151	S1	SD
1N4153	S1	SD
1N4446	S1	SD
1N4448	S1	SD
1N4531	S1	SD
1N4532	S1	SD
1N5059	S1	R
1N5060	S1	R
1N5061	S1	R
1N5062	S1	R
1N5225B to 1N5267B	S1	SD
2N918	S10	WBT
2N929	S3	Sm
2N930	S3	Sm
2N1613	S3	Sm
2N1711	S3	Sm
2N1893	S3	Sm
2N2219	S3	Sm
2N2219A	S3	Sm
2N2222	S3	Sm
2N2222A	S3	Sm
2N2297	S3	Sm
2N2368	S3	Sm
2N2369	S3	Sm
2N2369A	S3	Sm
2N2483	S3	Sm
2N2484	S3	Sm
2N2904	S3	Sm
2N2904A	S3	Sm
2N2905	S3	Sm
2N2905A	S3	Sm
2N2906	S3	Sm
2N2906A	S3	Sm
2N2907	S3	Sm
2N2907A	S3	Sm
2N3019	S3	Sm
2N3020	S3	Sm
2N3053	S3	Sm
2N3375	S6	RFP
2N3553	S6	RFP
2N3632	S6	RFP
2N3822	S5	FET
2N3823	S5	FET
2N3866	S6	RFP
2N3903	S3	Sm
2N3904	S3	Sm
2N3905	S3	Sm
2N3906	S3	Sm
2N3924	S6	RFP
2N3926	S6	RFP
2N3927	S6	RFP
2N3966	S5	FET
2N4030	S3	Sm
2N4031	S3	Sm
2N4032	S3	Sm
2N4033	S3	Sm
2N4091	S5	FET
2N4092	S5	FET
2N4093	S5	FET
2N4123	S3	Sm
2N4124	S3	Sm
2N4125	S3	Sm
2N4126	S3	Sm
2N4391	S5	FET
2N4392	S5	FET
2N4393	S5	FET
2N4427	S6	RFP
2N4856	S5	FET
2N4857	S5	FET
2N4858	S5	FET
2N4859	S5	FET
2N4860	S5	FET
2N4861	S5	FET
2N5400	S3	Sm
2N5401	S3	Sm
2N5415	S3	Sm
2N5416	S3	Sm
2N5550	S3	Sm
2N5551	S3	Sm
2N6659	S5	FET
2N6660	S5	FET
2N6661	S5	FET
4N25	S8b	PhC
4N25A	S8b	PhC
4N26	S8b	PhC
4N27	S8b	PhC
4N28	S8b	PhC
4N35	S8b	PhC

A = Accessories
FET = Field-effect transistors
Ph = Photoconductive devices
PhC = Photocouplers
R = Rectifier diodes
RFP = R.F. power transistors and modules
SD = Small-signal diodes
Sm = Small-signal transistors
WBT = Wideband transistors

type no.	book	section
4N36	S8b	PhC
4N37	S8b	PhC
4N38	S8b	PhC
4N38A	S8b	PhC
502CQF	S8b	Ph
503CQF	S8b	Ph
504CQL	S8b	Ph
516CQF-B	S8b	Ph
56201d	S4b	A
56201j	S4b	A
56245	S3,10	A
56246	S3,10	A
56261a	S4b	A
56264	S2a/b	A
56295	S2a/b	A
56326	S4b	A
56339	S4b	A
56352	S4b	A
56353	S4b	A
56354	S4b	A
56359b	S2,4b	A
56359c	S2,4b	A
56359d	S2,4b	A
56360a	S2,4b	A
56363	S2,4b	A
56364	S2,4b	A
56367	S2a/b	A
56368b	S2,4b	A
56368c	S2,4b	A
56369	S2,4b	A
56378	S2,4b	A
56379	S2,4b	A
56387a,b	S4b	A
56397	S8b	A

A = Accessories

Ph = Photoconductive devices

PhC = Photocouplers

NOTES

NOTES

NOTES

NOTES

NOTES

NOTES

NOTES

NOTES

NOTES

DATA HANDBOOK SYSTEM

DATA HANDBOOK SYSTEM

Our Data Handbook System comprises more than 60 books with specifications on electronic components, subassemblies and materials. It is made up of four series of handbooks:

ELECTRON TUBES	BLUE
SEMICONDUCTORS	RED
INTEGRATED CIRCUITS	PURPLE
COMPONENTS AND MATERIALS	GREEN

The contents of each series are listed on pages iv to vii.

The data handbooks contain all pertinent data available at the time of publication, and each is revised and reissued periodically.

When ratings or specifications differ from those published in the preceding edition they are indicated with arrows in the page margin. Where application information is given it is advisory and does not form part of the product specification.

Condensed data on the preferred products of Philips Electronic Components and Materials Division is given in our Preferred Type Range catalogue (issued annually).

Information on current Data Handbooks and on how to obtain a subscription for future issues is available from any of the Organizations listed on the back cover.
Product specialists are at your service and enquiries will be answered promptly.

ELECTRON TUBES (BLUE SERIES)

The blue series of data handbooks comprises:

T1	**Tubes for r.f. heating**
T2a	**Transmitting tubes for communications, glass types**
T2b	**Transmitting tubes for communications, ceramic types**
T3	**Klystrons**
T4	**Magnetrons for microwave heating**
T5	**Cathode-ray tubes** Instrument tubes, monitor and display tubes, C.R. tubes for special applications
T6	**Geiger-Müller tubes**
T8	**Colour display systems** Colour TV picture tubes, colour data graphic display tube assemblies, deflection units
T9	**Photo and electron multipliers**
T10	**Plumbicon camera tubes and accessories**
T11	**Microwave semiconductors and components**
T12	**Vidicon and Newvicon camera tubes**
T13	**Image intensifiers and infrared detectors**
T15	**Dry reed switches**
T16	**Monochrome tubes and deflection units** Black and white TV picture tubes, monochrome data graphic display tubes, deflection units

SEMICONDUCTORS (RED SERIES)

The red series of data handbooks comprises:

S1	**Diodes** Small-signal silicon diodes, voltage regulator diodes (< 1,5 W), voltage reference diodes, tuner diodes, rectifier diodes
S2a	**Power diodes**
S2b	**Thyristors and triacs**
S3	**Small-signal transistors**
S4a	**Low-frequency power transistors and hybrid modules**
S4b	**High-voltage and switching power transistors**
S5	**Field-effect transistors**
S6	**R.F. power transistors and modules**
S7	**Surface mounted semiconductors**
S8a	**Light-emitting diodes**
S8b	**Devices for optoelectronics** Optocouplers, photosensitive diodes and transistors, infrared light-emitting diodes and infrared sensitive devices, laser and fibre-optic components
S9	**Power MOS transistors**
S10	**Wideband transistors and wideband hybrid IC modules**
S11	**Microwave transistors**
S12	**Surface acoustic wave devices**
S13	**Semiconductor sensors**
S14	**Liquid Crystal Displays**

INTEGRATED CIRCUITS (PURPLE SERIES)

The purple series of handbooks comprises:

IC01	**Radio, audio and associated systems** Bipolar, MOS	published 1986
IC02a/b	**Video and associated systems** Bipolar, MOS	published 1986
IC03	**Integrated circuits for telephony** Bipolar, MOS	published 1986
IC04	**HE4000B logic family** CMOS	published 1986
IC05N	**HE4000B logic family — uncased ICs** CMOS	published 1984
IC06N	**High-speed CMOS; PC74HC/HCT/HCU** Logic family	published 1986
IC08	**ECL 10K and 100K logic families**	published 1986
IC09N	**TTL logic series**	published 1986
IC10	**Memories** MOS, TTL, ECL	new issue 1987
IC11N	**Linear LSI**	published 1985
Supplement to IC11N	**Linear LSI**	published 1986
IC12	**I^2C-bus compatible ICs**	not yet issued
IC13	**Semi-custom** Programmable Logic Devices (PLD)	new issue 1987
IC14	**Microcontrollers and peripherals** Bipolar, MOS	new issue 1987
IC15	**FAST TTL logic series**	published 1986
IC16	**CMOS integrated circuits for clocks and watches**	published 1986
IC17	**Integrated Services Digital Networks (ISDN)**	not yet issued
IC18	**Microprocessors and peripherals**	new issue 1987

COMPONENTS AND MATERIALS (GREEN SERIES)

The green series of data handbooks comprises:

C2	Television tuners, coaxial aerial input assemblies
C3	Loudspeakers
C4	Ferroxcube potcores, square cores and cross cores
C5	Ferroxcube for power, audio/video and accelerators
C6	Synchronous motors and gearboxes
C7	Variable capacitors
C8	Variable mains transformers
C9	Piezoelectric quartz devices
C11	Varistors, thermistors and sensors
C12	Potentiometers, encoders and switches
C13	Fixed resistors
C14	Electrolytic and solid capacitors
C15	Ceramic capacitors
C16	Permanent magnet materials
C17	Stepping motors and associated electronics
C18	Direct current motors
C19	Piezoelectric ceramics
C20	Wire-wound components for TVs and monitors
C22	Film capacitors

Electronic components and materials for professional, industrial and consumer uses from the world-wide Philips Group of Companies

Argentina: PHILIPS ARGENTINA S.A., Div. Elcoma, Vedia 3892, 1430 BUENOS AIRES, Tel. (01) 541 - 7141 to 7747.
Australia: PHILIPS INDUSTRIES LTD., Elcoma Division, 11 Waltham Street, ARTARMON, N.S.W. 2064, Tel. (02) 439 3322.
Austria: ÖSTERREICHISCHE PHILIPS INDUSTRIE G.m.b.H., UB Bauelemente, Triester Str. 64, A-1101 WIEN, Tel. (0222) 62 91 11-0.
Belgium: N.V. PHILIPS & MBLE ASSOCIATED, 80 Rue Des Deux Gares, B-1070 BRUXELLES, Tel. (02) 525-61-11.
Brazil: CONSTANTA-IBRAPE; (Active Devices): Av. Brigadeiro Faria Lima, 1735-SAO PAULO-SP, Tel. (011) 211-2600,
(Passive Devices & Materials): Av. Francisco Monteiro, 702 - RIBEIRAO PIRES-SP, Tel. (011) 459-8211.
Canada: PHILIPS ELECTRONICS LTD., Elcoma Division, 601 Milner Ave., SCARBOROUGH, Ontario, M1B 1M8, Tel. (416) 292-5161.
Chile: PHILIPS CHILENA S.A., Av. Santa Maria 0760, SANTIAGO, Tel. (02) 77 38 16.
Colombia: IND. PHILIPS DE COLOMBIA S.A., c/o IPRELENSO LTD., Cra. 21, No. 56-17, BOGOTA, D.E., Tel. (01) 2 49 76 24.
Denmark: MINIWATT A/S, Strandlodsvej 2, P.O. Box 1919, DK 2300 COPENHAGEN S, Tel. (01) 54 11 33.
Finland: OY PHILIPS AB, Elcoma Division, Kaivokatu 8, SF-00100 HELSINKI 10, Tel. (90) 1 72 71.
France: RTC-COMPELEC, 130 Avenue Ledru Rollin, F-75540 PARIS 11, Tel. (01) 43 38 80 00.
Germany (Fed. Republic): VALVO, UB Bauelemente der Philips G.m.b.H., Valvo Haus, Burchardstrasse 19, D-2 HAMBURG 1, Tel. (040) 3296-0.
Greece: PHILIPS HELLENIQUE S.A., Elcoma Division, No. 15, 25th March Street, GR 17778 TAVROS, Tel. (01) 48 94 339/48 94 911.
Hong Kong: PHILIPS HONG KONG LTD., Elcoma Div., 15/F Philips Ind. Bldg., 24-28 Kung Yip St., KWAI CHUNG, Tel. (0)-24 51 21.
India: PEICO ELECTRONICS & ELECTRICALS LTD., Elcoma Dept., Band Box Building,
254-D Dr. Annie Besant Rd., BOMBAY - 400 025, Tel. (022) 4930311/4930590.
Indonesia: P.T. PHILIPS-RALIN ELECTRONICS, Elcoma Div., Setiabudi II Building, 6th Fl., Jalan H.R. Rasuna Said (P.O. Box 223/KBY) Kuningan,
JAKARTA 12910, Tel. (021) 51 79 95.
Ireland: PHILIPS ELECTRICAL (IRELAND) LTD., Elcoma Division, Newstead, Clonskeagh, DUBLIN 14, Tel. (01) 69 33 55.
Italy: PHILIPS S.p.A., Div. Componenti Elcoma, Piazza IV Novembre 3, I-20124 MILANO, Tel. (02) 6752.1.
Japan: NIHON PHILIPS CORP., Shuwa Shinagawa Bldg., 26-33 Takanawa 3-chome, Minato-ku, TOKYO (108), Tel. (03) 448-5611.
(IC Products) SIGNETICS JAPAN LTD., 8-7 Sanbancho Chiyoda-ku, TOKYO 102, Tel. (03) 230-1521.
Korea (Republic of): PHILIPS ELECTRONICS (KOREA) LTD., Elcoma Div., Philips House, 260-199 Itaewon-dong, Yongsan-ku, SEOUL,
Tel. (02) 794-5011.
Malaysia: PHILIPS MALAYSIA SDN BHD, Elcoma Div., 345 Jalan Gelugor, 11700 PULAU PINANG, Tel. (04) 87 00 44.
Mexico: ELECTRONICA, S.A de C.V., Carr. México-Toluca km. 62.5, TOLUCA, Edo. de México 50140, Tel. Toluca 91 (721) 613-00.
Netherlands: PHILIPS NEDERLAND, Marktgroep Elonco, Postbus 90050, 5600 PB EINDHOVEN, Tel. (040) 78 37 49.
New Zealand: PHILIPS NEW ZEALAND LTD., Elcoma Division, 110 Mt. Eden Road, C.P.O. Box 1041, AUCKLAND, Tel. (09) 605-914.
Norway: NORSK A/S PHILIPS, Electronica Dept., Sandstuveien 70, OSLO 6, Tel. (02) 68 02 00.
Pakistan: PHILIPS ELECTRICAL CO. OF PAKISTAN LTD., Philips Markaz, M.A. Jinnah Rd., KARACHI-3, Tel. (021) 72 57 72.
Peru: CADESA, Av. Alfonso Ugarte 1268, LIMA 5, Tel. (014) 326070.
Philippines: PHILIPS INDUSTRIAL DEV. INC., 2246 Pasong Tamo, P.O. Box 911, Makati Comm. Centre, MAKATI-RIZAL 3116, Tel. (02) 86 89 51 to 59.
Portugal: PHILIPS PORTUGUESA S.A.R.L., Av. Eng. Duarte Pacheco 6, 1009 LISBOA Codex, Tel. (019) 68 31 21.
Singapore: PHILIPS PROJECT DEV. (Singapore) PTE LTD., Elcoma Div., Lorong 1, Toa Payoh, SINGAPORE 1231, Tel. 35 02 000.
South Africa: S.A. PHILIPS (Pty) LTD., EDAC Div., 3rd Floor Rainer House, Upper Railway Rd. & Ove St., New Doornfontein, JOHANNESBURG 2001,
Tel. (011) 402-4600/07.
Spain: MINIWATT S.A., Balmes 22, BARCELONA 7, Tel. (03) 301 63 12.
Sweden: PHILIPS KOMPONENTER A.B., Lidingövägen 50, S-11584 STOCKHOLM 27, Tel. (08) 7821000.
Switzerland: PHILIPS A.G., Elcoma Dept., Allmendstrasse 140-142, CH-8027 ZÜRICH, Tel. (01) 488 22 11.
Taiwan: PHILIPS TAIWAN LTD., 150 Tun Hua North Road, P.O. Box 22978, TAIPEI, Taiwan, Tel. (02) 7120500.
Thailand: PHILIPS ELECTRICAL CO. OF THAILAND LTD., 283 Silom Road, P.O. Box 961, BANGKOK, Tel. (02) 233-6330-9.
Turkey: TÜRK PHILIPS TICARET A.S., Elcoma Department, Inönü Cad., No. 78-80, 80090 Ayazpasa ISTANBUL, Tel. (01) 143 59 10.
United Kingdom: MULLARD LTD., Mullard House, Torrington Place, LONDON WC1E 7HD, Tel. (01) 580 6633.
United States: (Active Devices & Materials) AMPEREX SALES CORP., Providence Pike, SLATERSVILLE, R.I. 02876, Tel. (401) 762-9000.
(Passive & Electromech. Dev.) MEPCO/CENTRALAB, INC., 2001 West Blue Heron Blvd, RIVIERA BEACH, Florida 33404,
Tel. (305) 881-3200.
(IC Products) SIGNETICS CORPORATION, 811 East Arques Avenue, SUNNYVALE, CA 94088-3409, Tel. (408) 991-2000.
Uruguay: LUZILECTRON S.A., Avda Uruguay 1287, P.O. Box 907, MONTEVIDEO, Tel. (02) 98 53 95.
Venezuela: IND. VENEZOLANAS PHILIPS S.A., c/o MAGNETICA S.A., Calle 6, Ed. Las Tres Jotas, App. Post. 78117, CARACAS, Tel. (02) 239 39 31.

For all other countries apply to: Philips Electronic Components and Materials Division, International Business Relations, P.O. Box 218,
5600 MD EINDHOVEN, The Netherlands, Telex 35000 phtcnl

AS54

Printed in The Netherlands
Date of release 4-'87
9398 148 90011